STM32

File: MCU.kicad_sch

ESP32

File: ESP32.kicad_sch

Current_Measurement

File: Current_Measurement.kicad_sch

Voltage_Measurement

File: Voltage_Measurement.kicad_sch

Peak_Detector

File: Peak_Detector.kicad_sch

Zero_Crossing_Detection

File: Zero_Crossing_Detection.kicad_sch

RTC

File: RTC.kicad_sch

Power_Supply

File: Power_Supply.kicad_sch

Connectors

File: Connectors.kicad_sch

Display

File: Display.kicad_sch

USB_To_TTL

File: USB_To_TTL.kicad_sch

Sheet: /
File: MEASURE_POWER_AC.kicad_sch

Title:

Size: A4	Date:	**Rev:**
KiCad E.D.A. 8.0.5		Id: 1/12

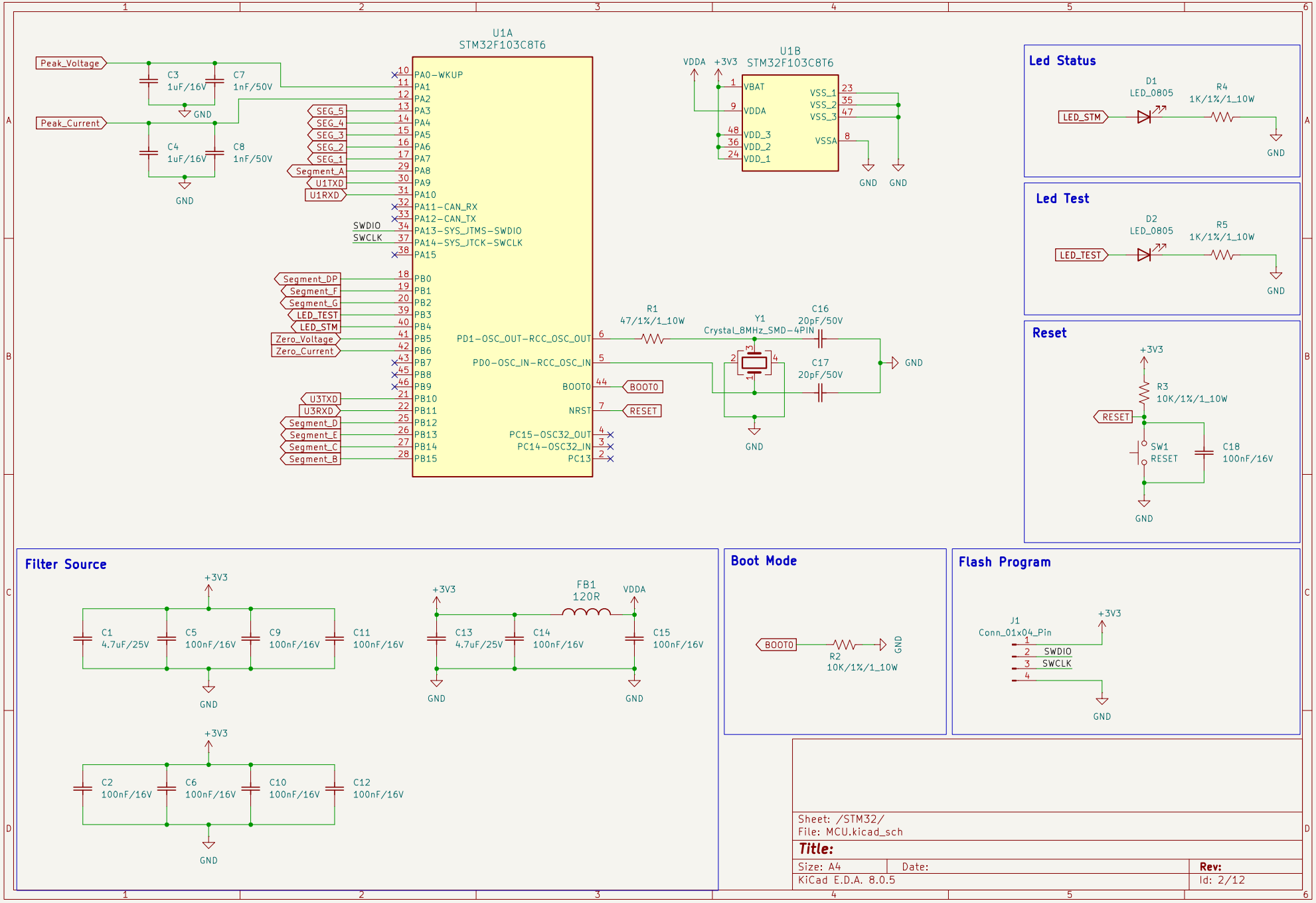
U1A
STM32F103C8T6
U1B
STM32F103C8T6
Peak_Voltage
Peak_Current
C3
1uF/16V
C7
1nF/50V
C4
1uF/16V
C8
1nF/50V
GND
SEG_5
SEG_4
SEG_3
SEG_2
SEG_1
Segment_A
U1TXD
U1RXD
SWDIO
SWCLK
Segment_DP
Segment_F
Segment_G
LED_TEST
LED_STM
Zero_Voltage
Zero_Current
U3TXD
U3RXD
Segment_D
Segment_E
Segment_C
Segment_B
PA0-WKUP
PA1
PA2
PA3
PA4
PA5
PA6
PA7
PA8
PA9
PA10
PA11-CAN_RX
PA12-CAN_TX
PA13-SYS_JTMS-SWDIO
PA14-SYS_JTCK-SWCLK
PA15
PB0
PB1
PB2
PB3
PB4
PB5
PB6
PB7
PB8
PB9
PB10
PB11
PB12
PB13
PB14
PB15
PD1-OSC_OUT-RCC_OSC_OUT
PD0-OSC_IN-RCC_OSC_IN
BOOT0
NRST
PC15-OSC32_OUT
PC14-OSC32_IN
PC13
R1
47/1%/1_10W
Y1
Crystal_8MHz_SMD-4PIN
C16
20pF/50V
C17
20pF/50V
VDDA
+3V3
VBAT
VDDA
VDD_3
VDD_2
VDD_1
VSS_1
VSS_2
VSS_3
VSSA
Led Status
D1
LED_0805
R4
1K/1%/1_10W
LED_STM
Led Test
D2
LED_0805
R5
1K/1%/1_10W
LED_TEST
Reset
+3V3
R3
10K/1%/1_10W
RESET
SW1
RESET
C18
100nF/16V
Filter Source
C1
4.7uF/25V
C5
100nF/16V
C9
100nF/16V
C11
100nF/16V
C13
4.7uF/25V
C14
100nF/16V
FB1
120R
C15
100nF/16V
C2
100nF/16V
C6
100nF/16V
C10
100nF/16V
C12
100nF/16V
Boot Mode
R2
10K/1%/1_10W
Flash Program
J1
Conn_01x04_Pin
SWDIO
SWCLK
Sheet: /STM32/
File: MCU.kicad_sch
Title:
Size: A4
Date:
Rev:
KiCad E.D.A. 8.0.5
Id: 2/12

Flash

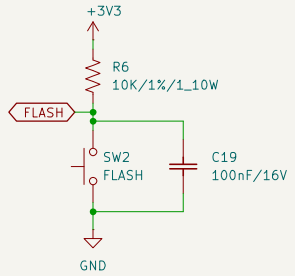

Enable

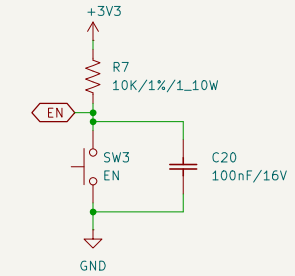

LED Test

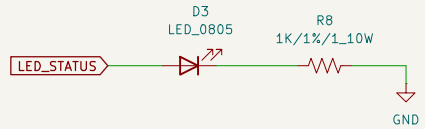

MCU

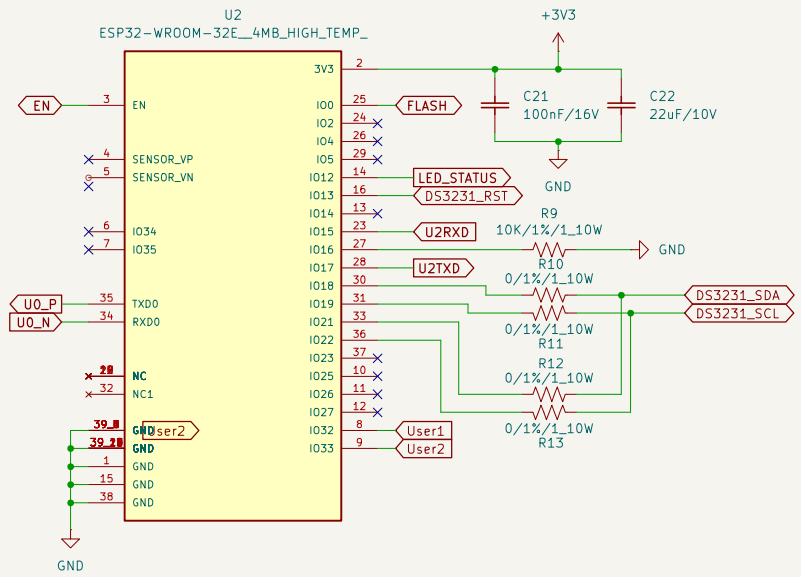

User Button

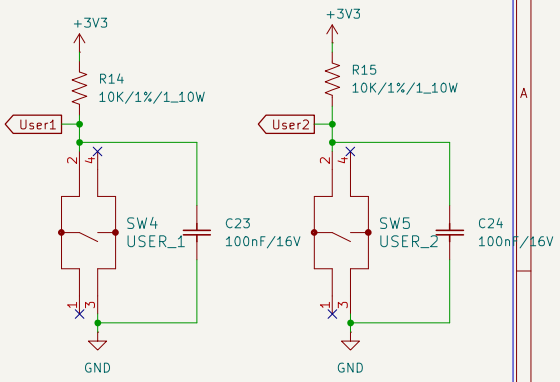

Sheet: /ESP32/
File: ESP32.kicad_sch

Title:

Size: A4	Date:	**Rev:**
KiCad E.D.A. 8.0.5		Id: 3/12

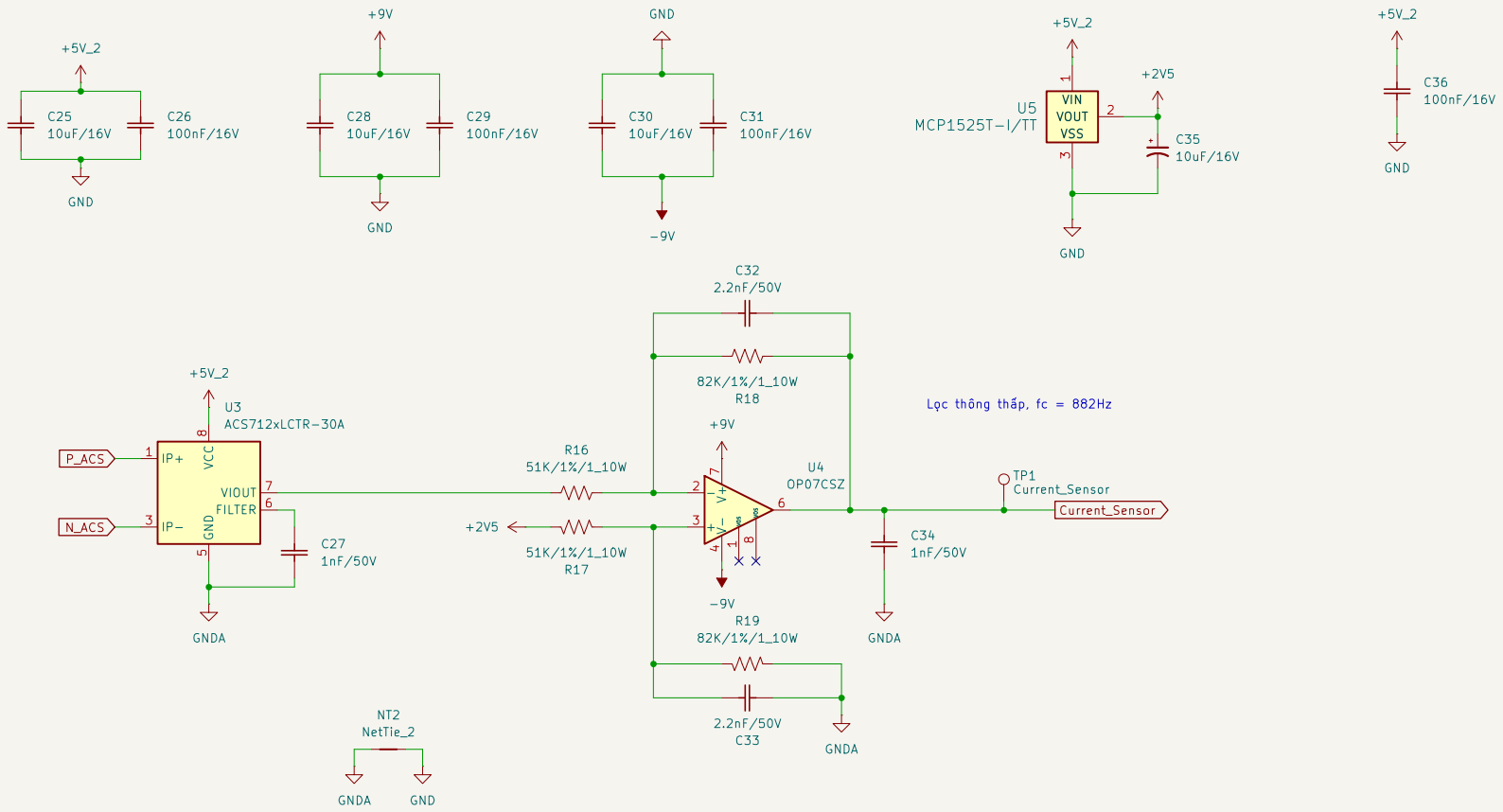

Sheet: /Current_Measurement/		
File: Current_Measurement.kicad_sch		
Title:		
Size: A4	Date:	**Rev:**
KiCad E.D.A. 8.0.5		Id: 4/12

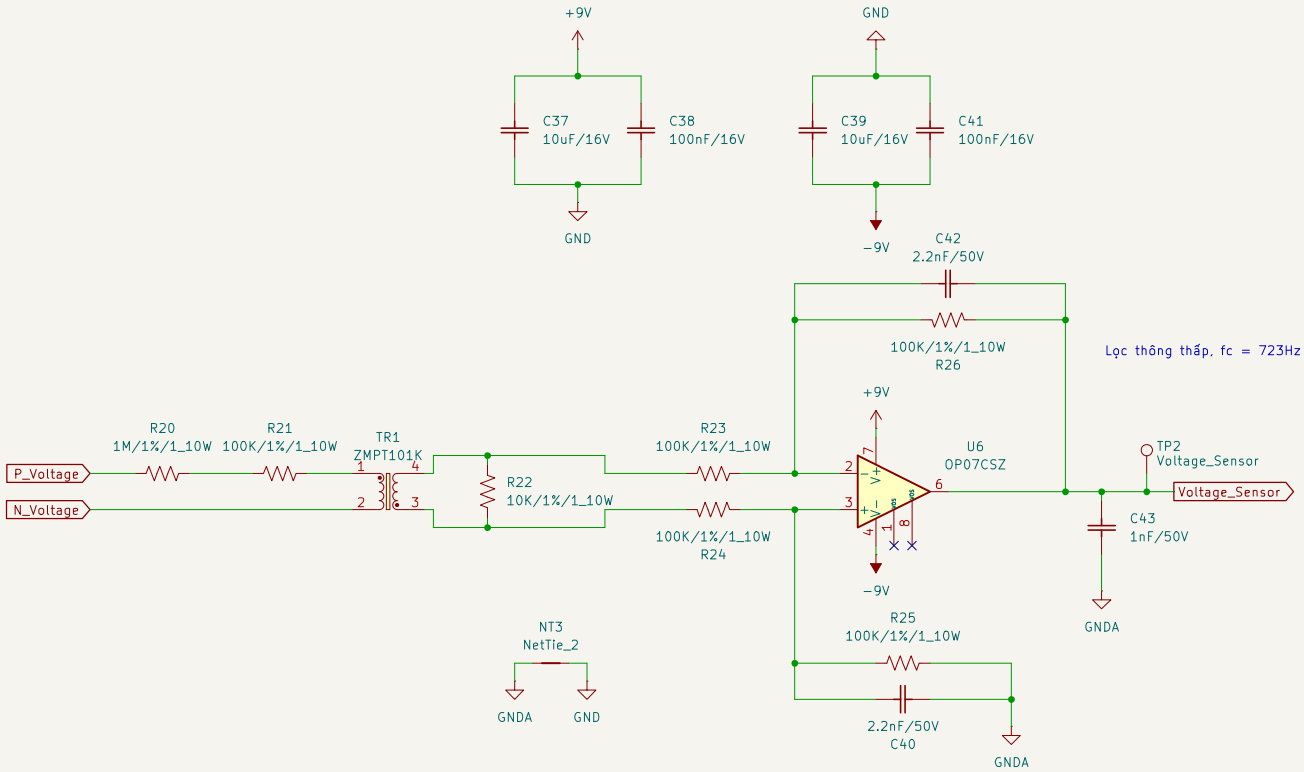

Sheet: /Voltage_Measurement/		
File: Voltage_Measurement.kicad_sch		
Title:		
Size: A4	Date:	**Rev:**
KiCad E.D.A. 8.0.5		Id: 5/12

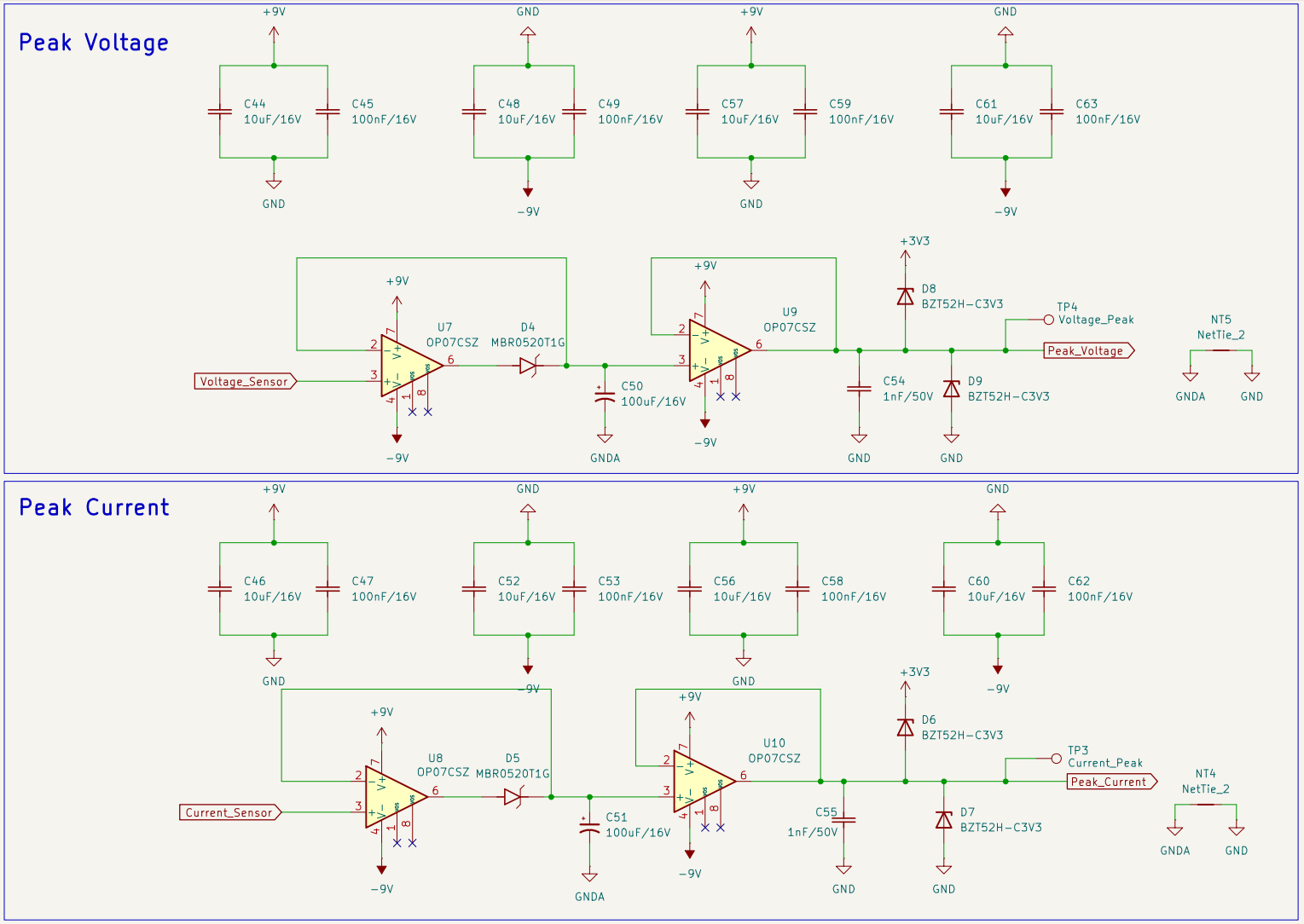

Sheet: /Peak_Detector/		
File: Peak_Detector.kicad_sch		
Title:		
Size: A4	Date:	**Rev:**
KiCad E.D.A. 8.0.5		Id: 6/12

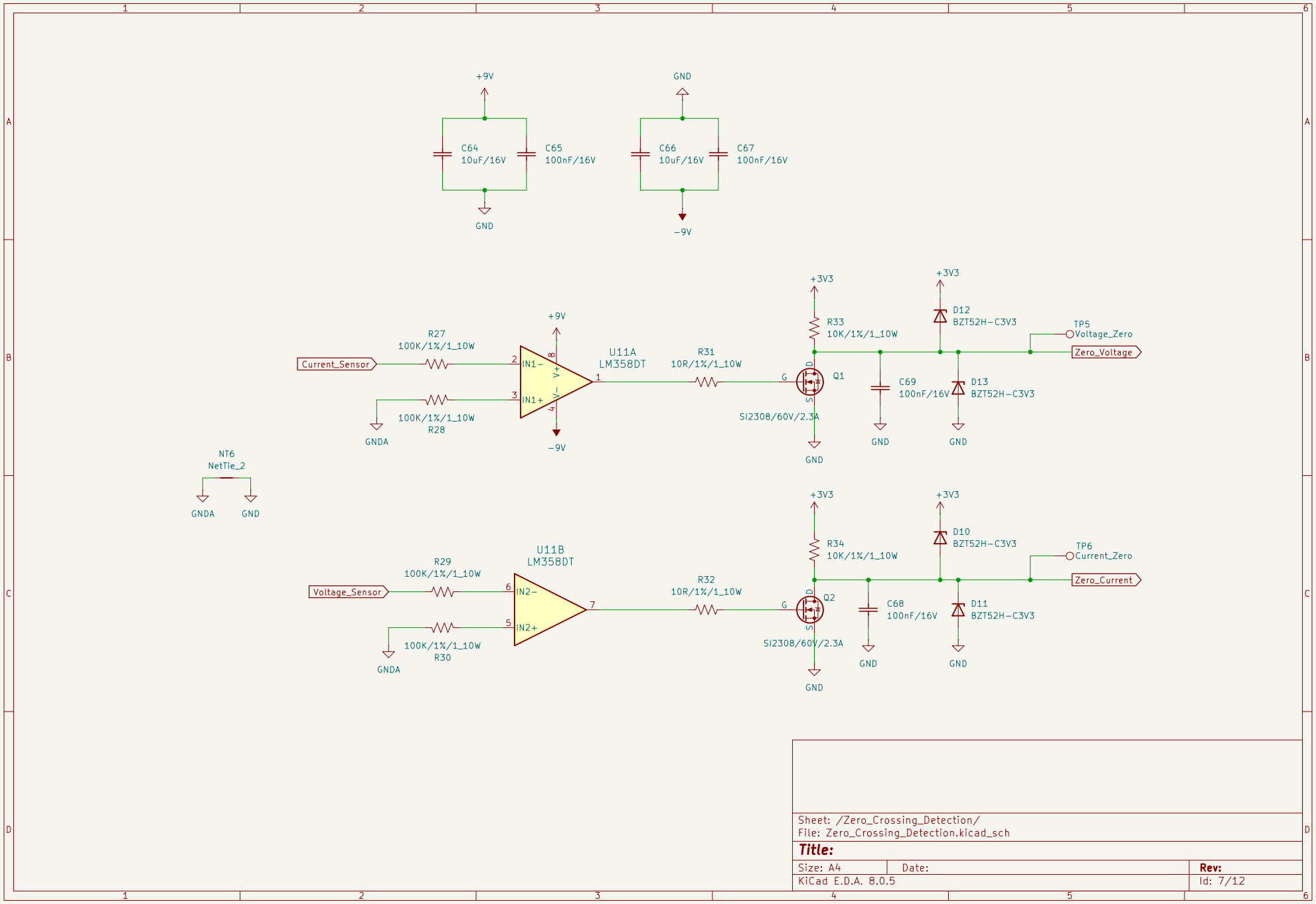

+9V
GND
C64
10uF/16V
C65
100nF/16V
C66
10uF/16V
C67
100nF/16V
-9V
+3V3
R33
10K/1%/1_10W
D12
BZT52H-C3V3
TP5
Voltage_Zero
Zero_Voltage
R27
100K/1%/1_10W
Current_Sensor
U11A
LM358DT
R31
10R/1%/1_10W
Q1
C69
100nF/16V
D13
BZT52H-C3V3
100K/1%/1_10W
R28
GNDA
SI2308/60V/2.3A
NT6
NetTie_2
R34
10K/1%/1_10W
D10
BZT52H-C3V3
TP6
Current_Zero
Zero_Current
U11B
LM358DT
R29
100K/1%/1_10W
Voltage_Sensor
R32
10R/1%/1_10W
Q2
C68
100nF/16V
D11
BZT52H-C3V3
100K/1%/1_10W
R30
Sheet: /Zero_Crossing_Detection/
File: Zero_Crossing_Detection.kicad_sch
Title:
Size: A4
Date:
Rev:
KiCad E.D.A. 8.0.5
Id: 7/12

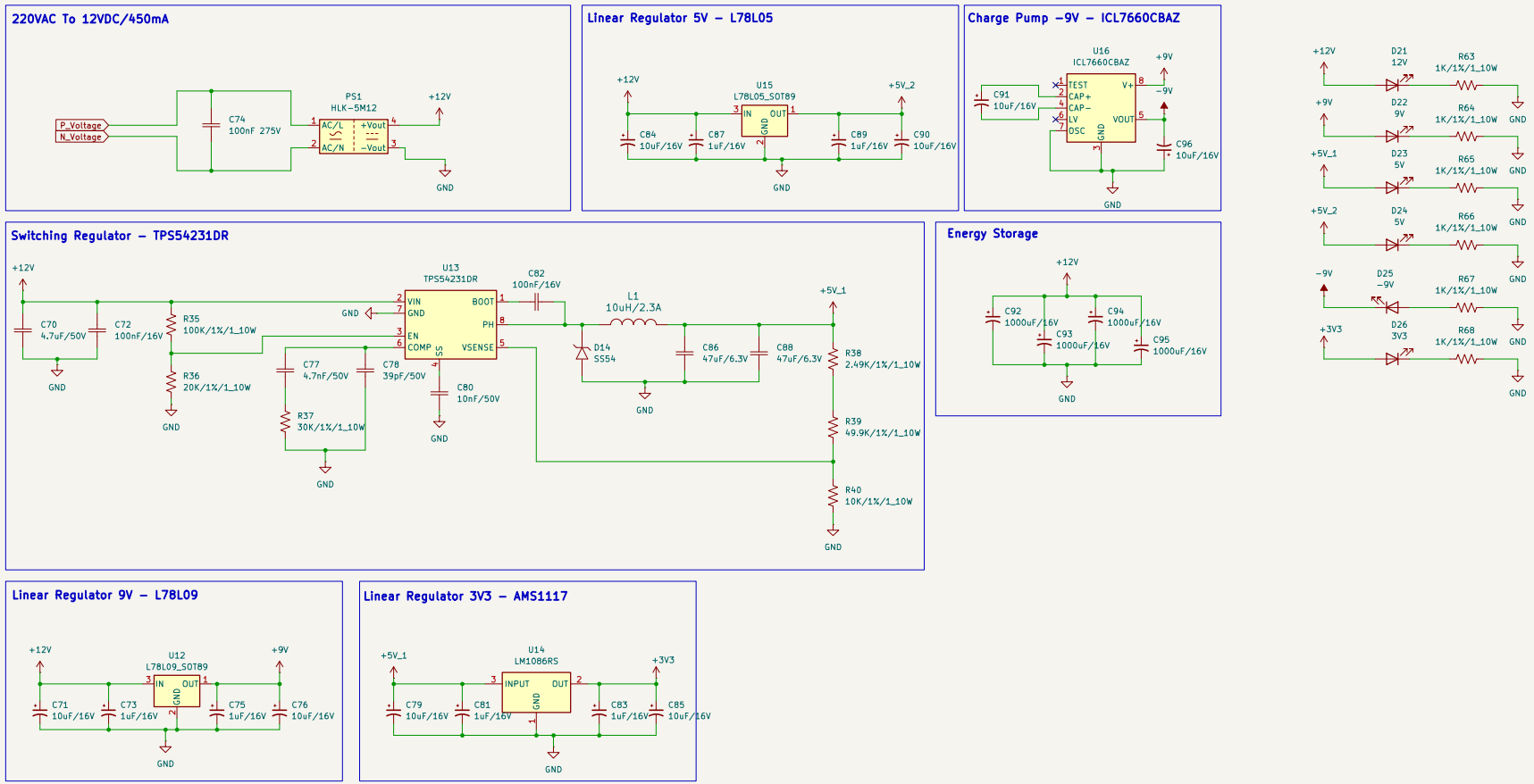

Sheet: /Power_Supply/		
File: Power_Supply.kicad_sch		
Title:		
Size: A3	Date:	**Rev:**
KiCad E.D.A. 8.0.5		Id: 8/12

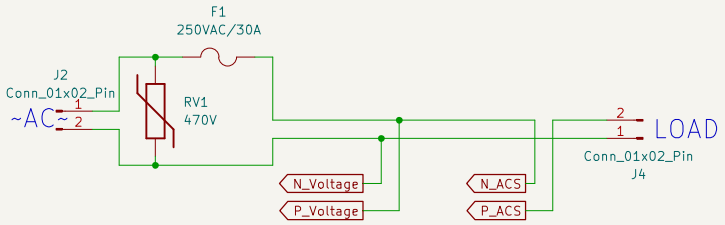

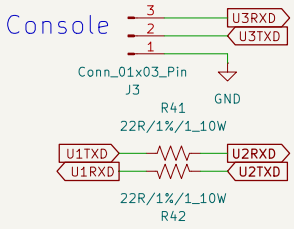

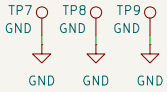

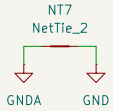

Sheet: /Connectors/ File: Connectors.kicad_sch		
Title:		
Size: A4	Date:	**Rev:**
KiCad E.D.A. 8.0.5		Id: 9/12

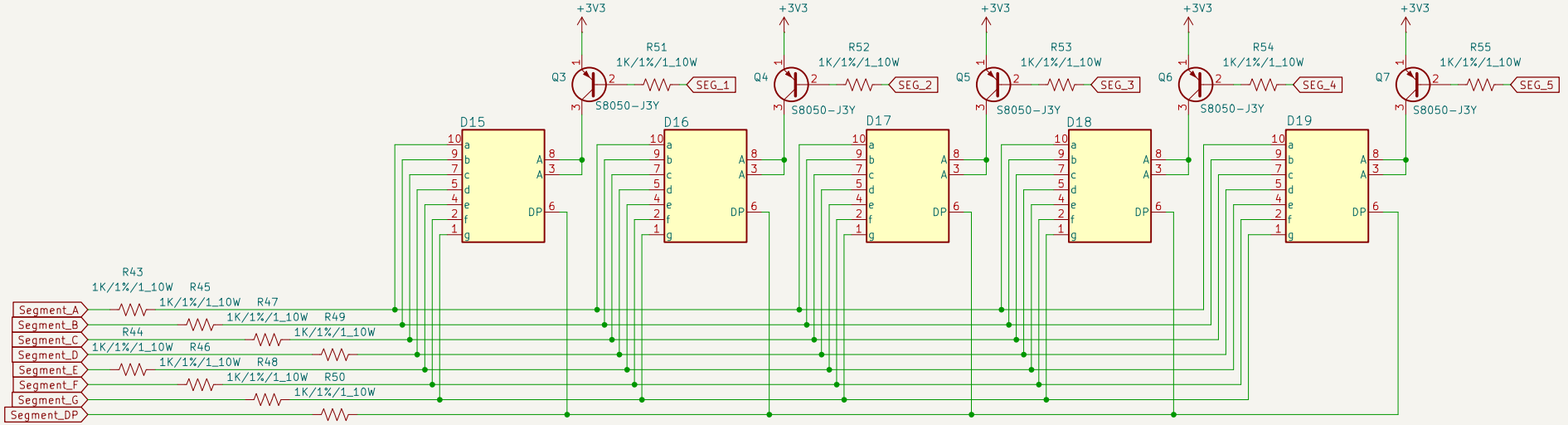

Sheet: /Display/		
File: Display.kicad_sch		
Title:		
Size: A4	Date:	**Rev:**
KiCad E.D.A. 8.0.5		Id: 10/12

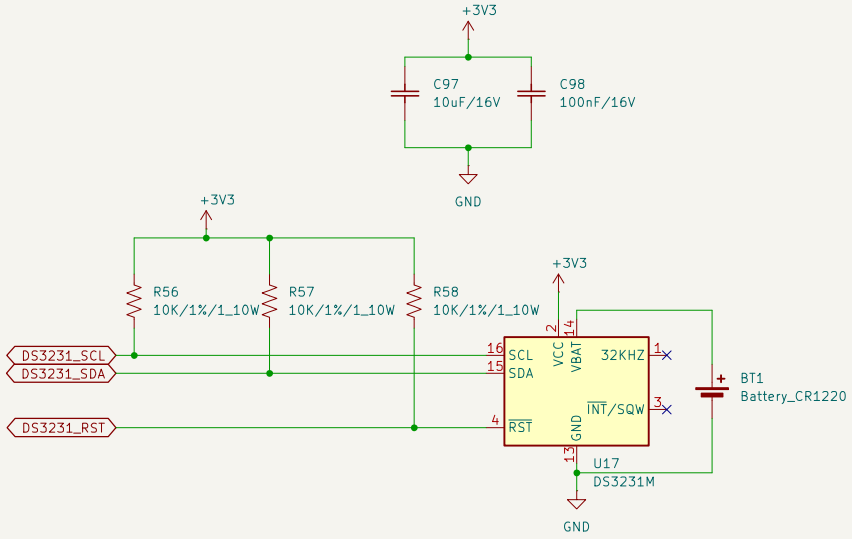

Sheet: /RTC/		
File: RTC.kicad_sch		
Title:		
Size: A4	Date:	**Rev:**
KiCad E.D.A. 8.0.5		Id: 11/12

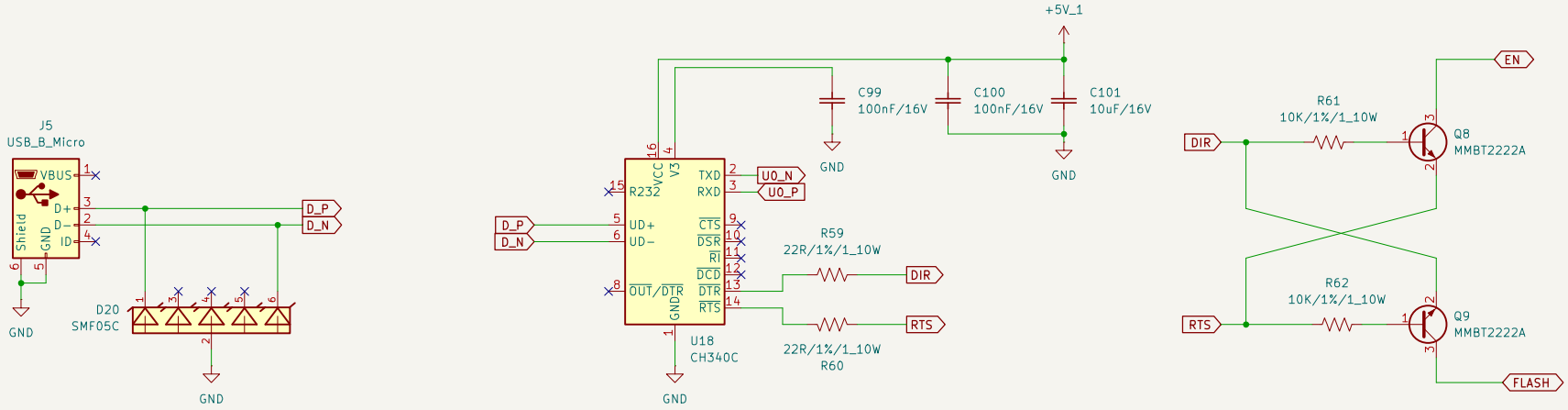

Sheet: /USB_To_TTL/		
File: USB_To_TTL.kicad_sch		
Title:		
Size: A4	Date:	**Rev:**
KiCad E.D.A. 8.0.5		Id: 12/12