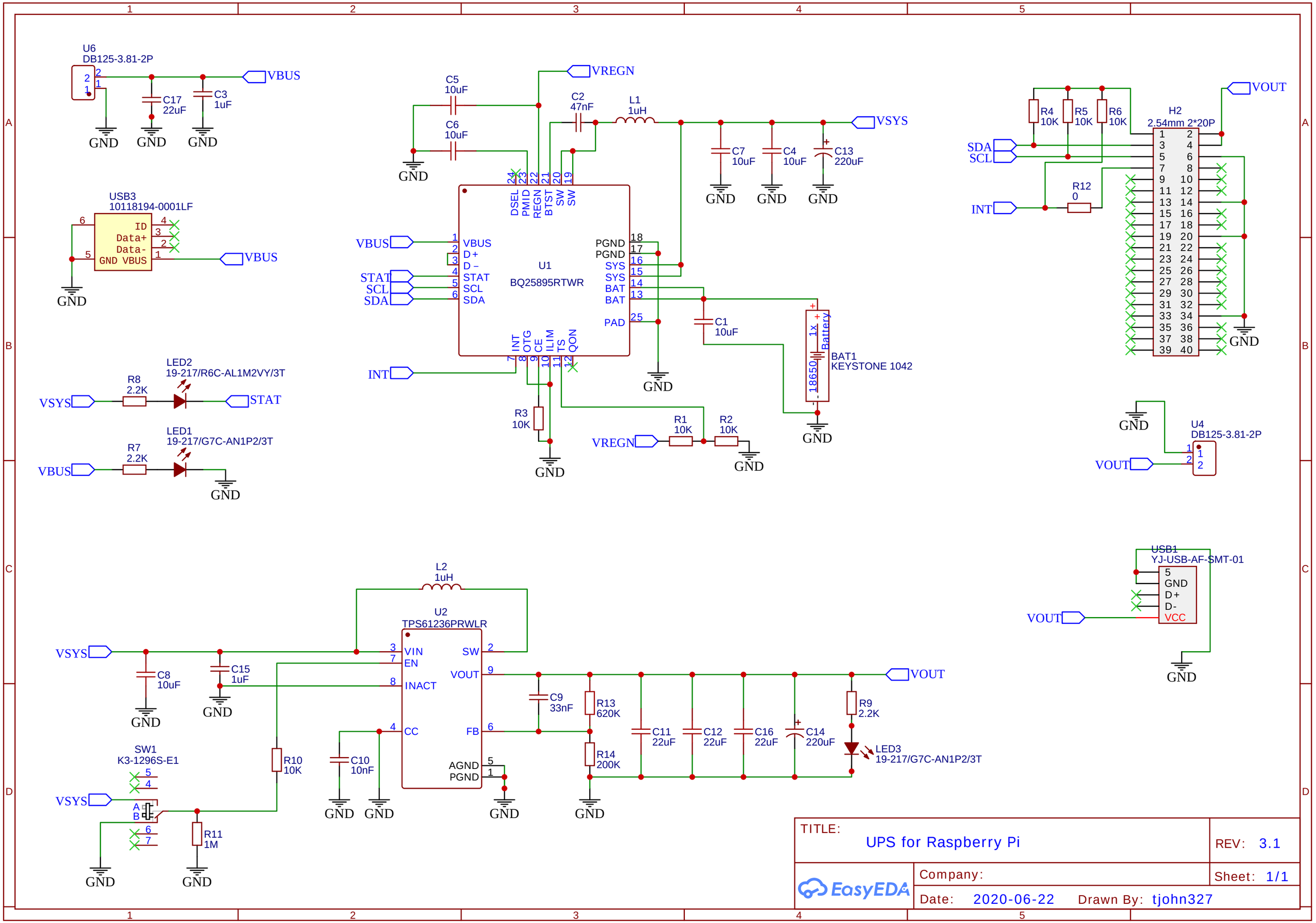
U6
DB125-3.81-2P
VBUS
C17
22uF
C3
1uF
GND
USB3
10118194-0001LF
ID
Data+
Data-
GND VBUS
C5
10uF
C6
10uF
VREGN
C2
47nF
L1
1uH
VSYS
C7
10uF
C4
10uF
C13
220uF
DSEL
PMID
REGN
BTST
SW
SW
VBUS
D+
D-
STAT
SCL
SDA
U1
BQ25895RTWR
PGND
PGND
SYS
SYS
BAT
BAT
PAD
INT
OTG
CE
ILIM
TS
QON
C1
10uF
BAT1
KEYSTONE 1042
18650
1x
Battery
R3
10K
R1
10K
R2
10K
VREGN
LED2
19-217/R6C-AL1M2VY/3T
R8
2.2K
STAT
LED1
19-217/G7C-AN1P2/3T
R7
2.2K
R4
10K
R5
10K
R6
10K
H2
2.54mm 2*20P
VOUT
R12
0
U4
DB125-3.81-2P
USB1
YJ-USB-AF-SMT-01
GND
VCC
L2
1uH
U2
TPS61236PRWLR
VIN
EN
INACT
CC
SW
VOUT
FB
AGND
PGND
C8
10uF
C15
1uF
C10
10nF
C9
33nF
R13
620K
R14
200K
C11
22uF
C12
22uF
C16
22uF
C14
220uF
R9
2.2K
LED3
19-217/G7C-AN1P2/3T
SW1
K3-1296S-E1
R10
10K
R11
1M
TITLE:
UPS for Raspberry Pi
REV: 3.1
Company:
Sheet: 1/1
Date: 2020-06-22
Drawn By: tjohn327
EasyEDA