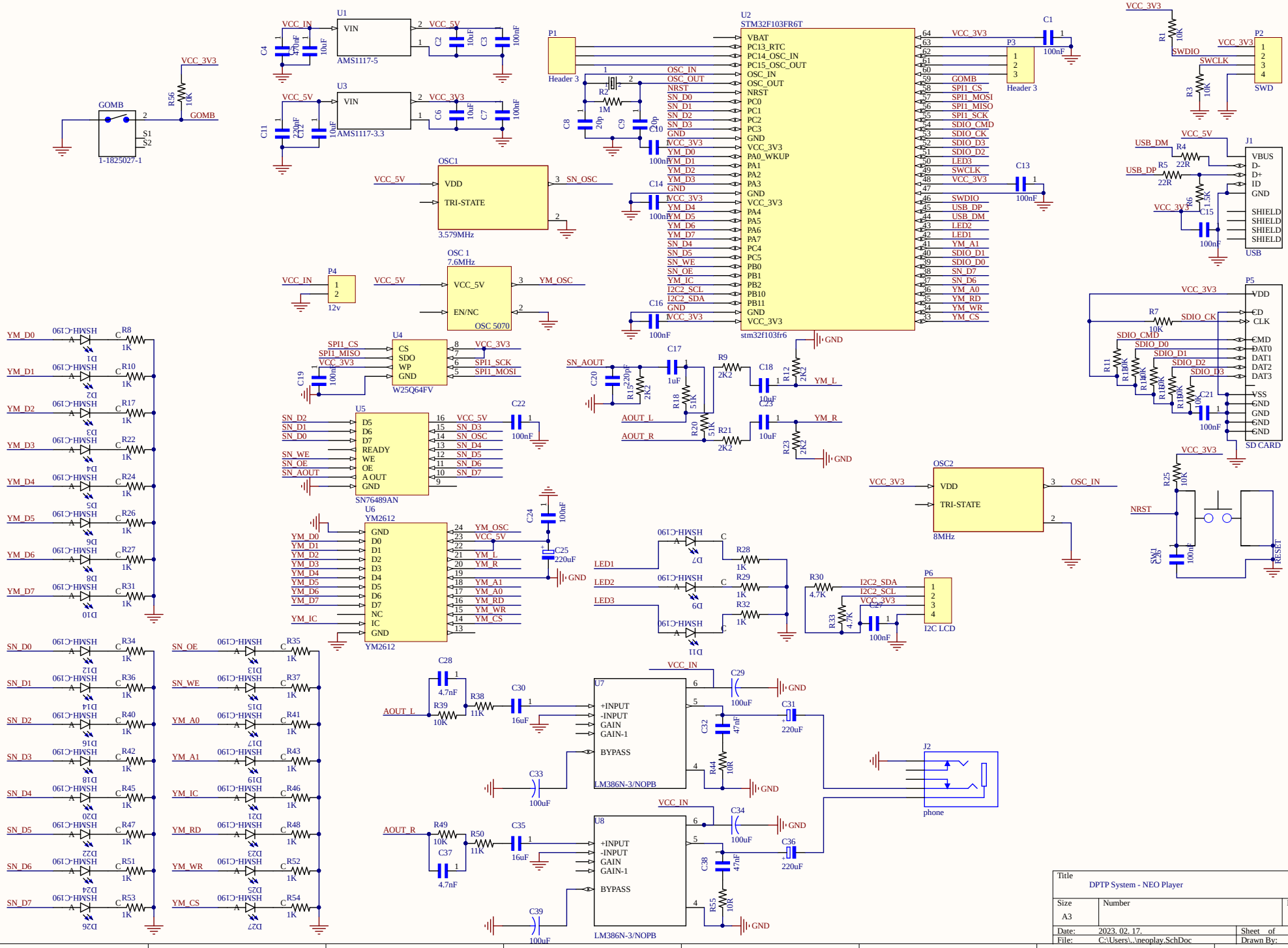

Title	DPTP System - NEO Player	
Size A3	Number	Revision 1.0
Date: 2023. 02. 17.		Sheet of
File: C:\Users\..\neoplay.SchDoc		Drawn By: DPTP System