MCU & Debug

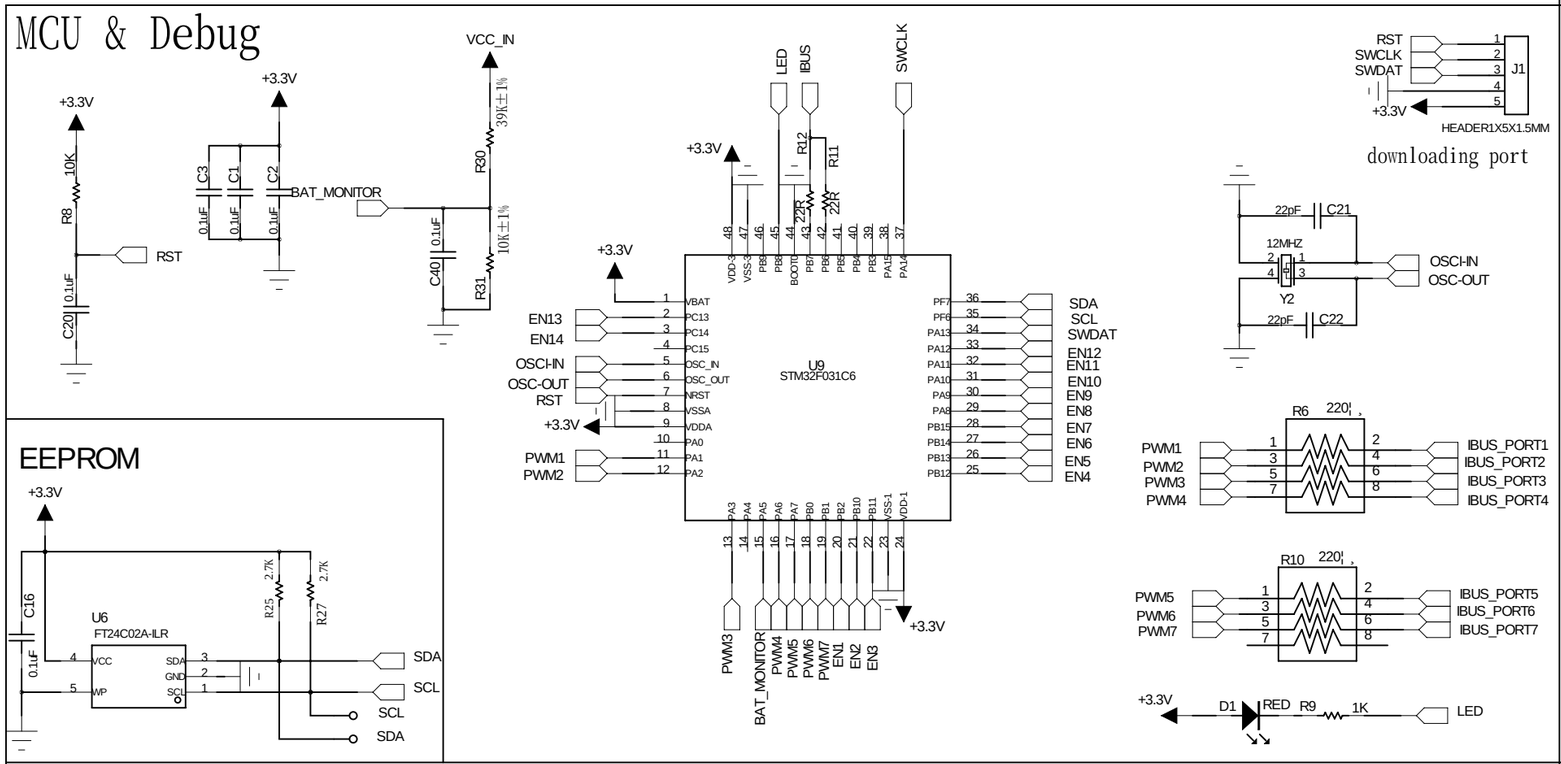

EEPROM

Power Supply (Internal)

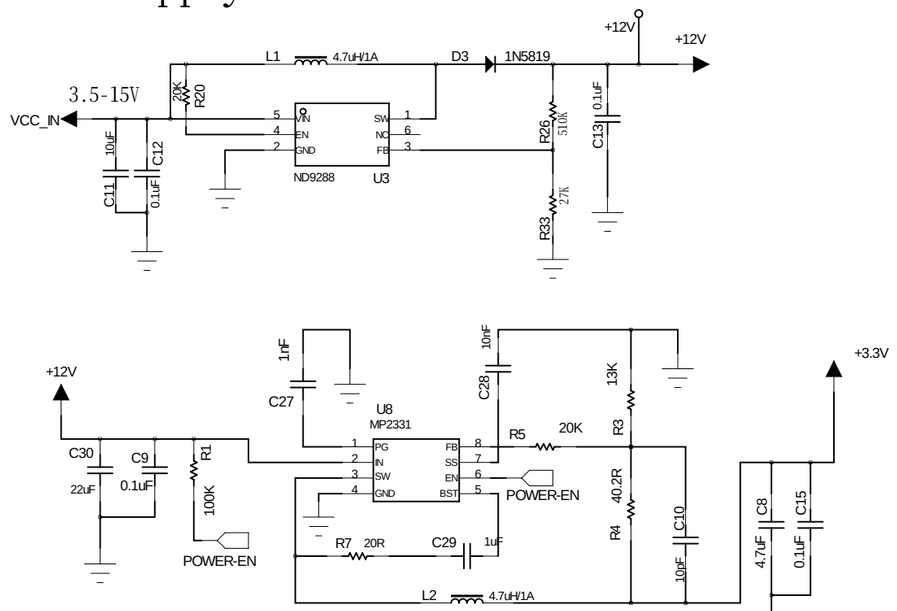

HUB Module

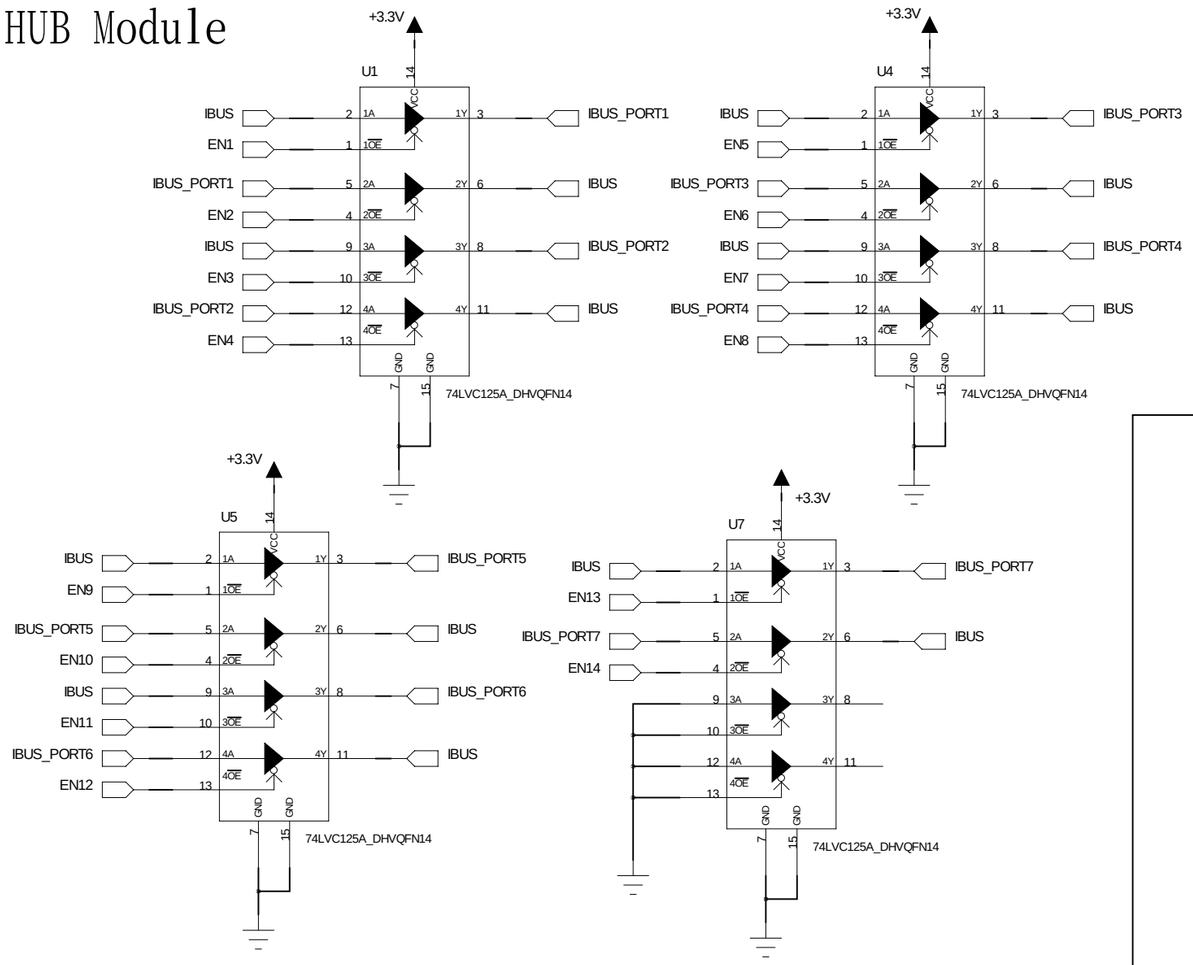

IBUS-HUB INPUT PORT

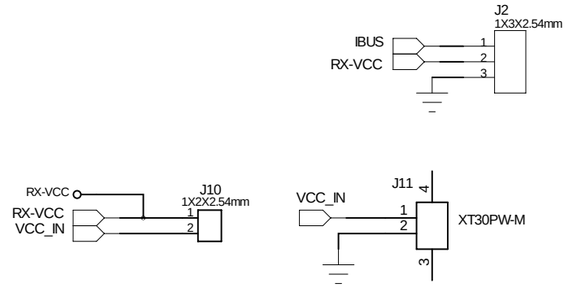

IBUS-HUB OUTPUT PORT

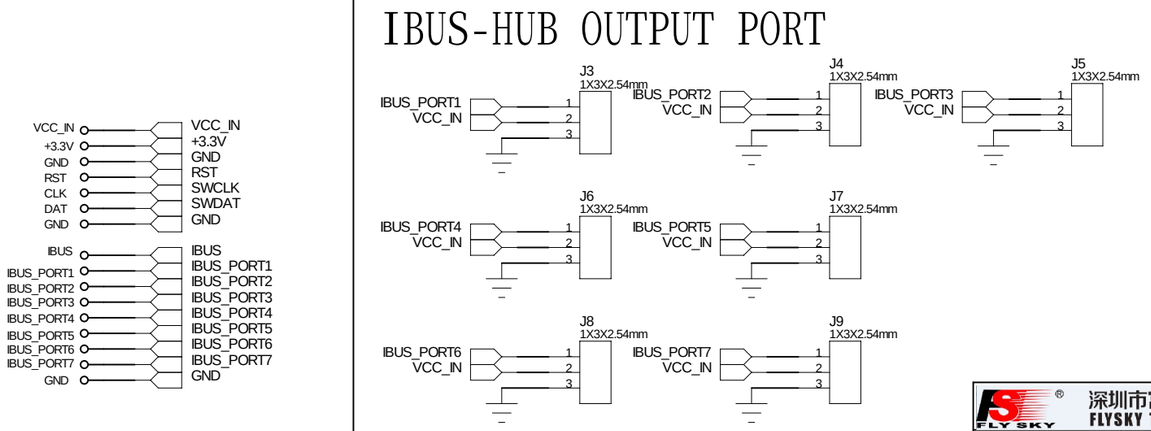

深圳市富斯科技有限公司
FLYSKY Technology Co., Ltd

Title: IBUS2	
Drawing No:	Version: 1.1
Drawn By:	Date: 2019.8.26
Size A3	Sheet: 1 of 2