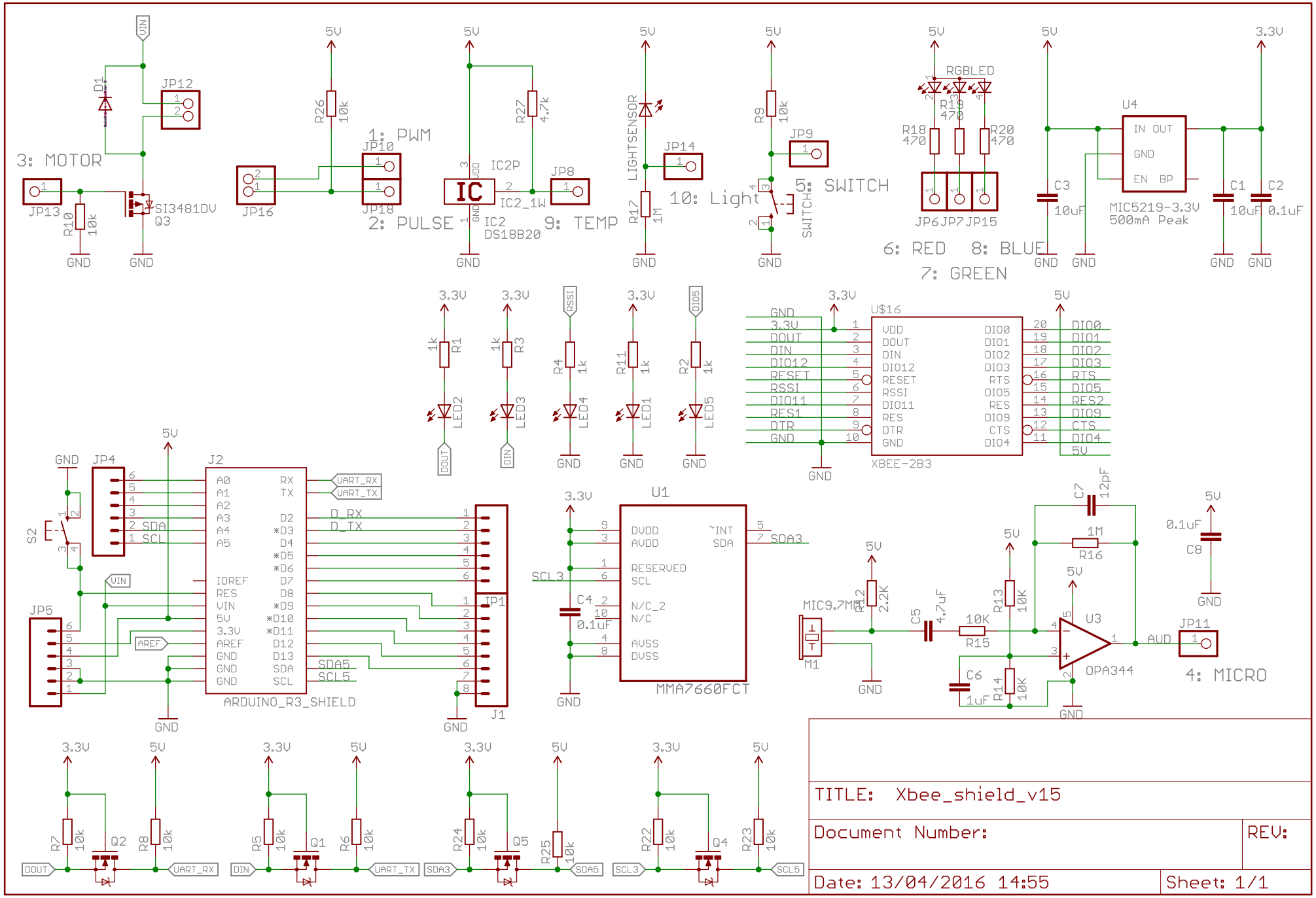
3: MOTOR
JP12
JP13
R10 10k
SI3481DV
Q3
D1
VIN
GND
1: PWM
JP10
JP16
JP18
R26 10k
5V
2: PULSE
IC2P
IC
IC2_1W
IC2
DS18B20
JP8
R27 4.7k
9: TEMP
LIGHTSENSOR
JP14
R17 1M
10: Light
R9 10k
JP9
5: SWITCH
SWITCH
RGBLED
R18 470
R19 470
R20 470
JP6 JP7 JP15
6: RED
7: GREEN
8: BLUE
U4
IN OUT
GND
EN BP
MIC5219-3.3V
500mA Peak
C3 10uF
C1 10uF
C2 0.1uF
3.3V
R1 1k
R3 1k
R4 1k
R11 1k
R2 1k
LED2
LED3
LED4
LED1
LED5
DOUT
DIN
RSSI
DIO5
U$16
XBEE-2B3
VDD
DOUT
DIN
DIO12
RESET
RSSI
DIO11
RES1
DTR
GND
DIO0
DIO1
DIO2
DIO3
RTS
DIO5
RES
DIO9
CTS
DIO4
RES2
JP4
JP5
S2
J2
ARDUINO_R3_SHIELD
A0
A1
A2
A3
A4
A5
IOREF
RES
VIN
5V
3.3V
AREF
GND
RX
TX
D2
*D3
D4
*D5
*D6
D7
D8
*D9
*D10
*D11
D12
D13
SDA
SCL
UART_RX
UART_TX
D_RX
D_TX
SDA5
SCL5
JP1
J1
U1
MMA7660FCT
DVDD
AVDD
RESERVED
SCL
N/C_2
N/C
AVSS
DVSS
~INT
SDA
SDA3
SCL3
C4 0.1uF
MIC9.7MM
M1
R12 2.2K
C5 4.7uF
R15 10K
R13 10K
R14 10K
C6 1uF
C7 12pF
R16 1M
U3
OPA344
AUD
JP11
4: MICRO
C8 0.1uF
R7 10k
Q2
R8 10k
R5 10k
Q1
R6 10k
R24 10k
Q5
R25 10k
R22 10k
Q4
R23 10k
TITLE: Xbee_shield_v15
Document Number:
REV:
Date: 13/04/2016 14:55
Sheet: 1/1