*** NOMADE *** - IMU wireless module V1.1

ATMEGA328P-MUR

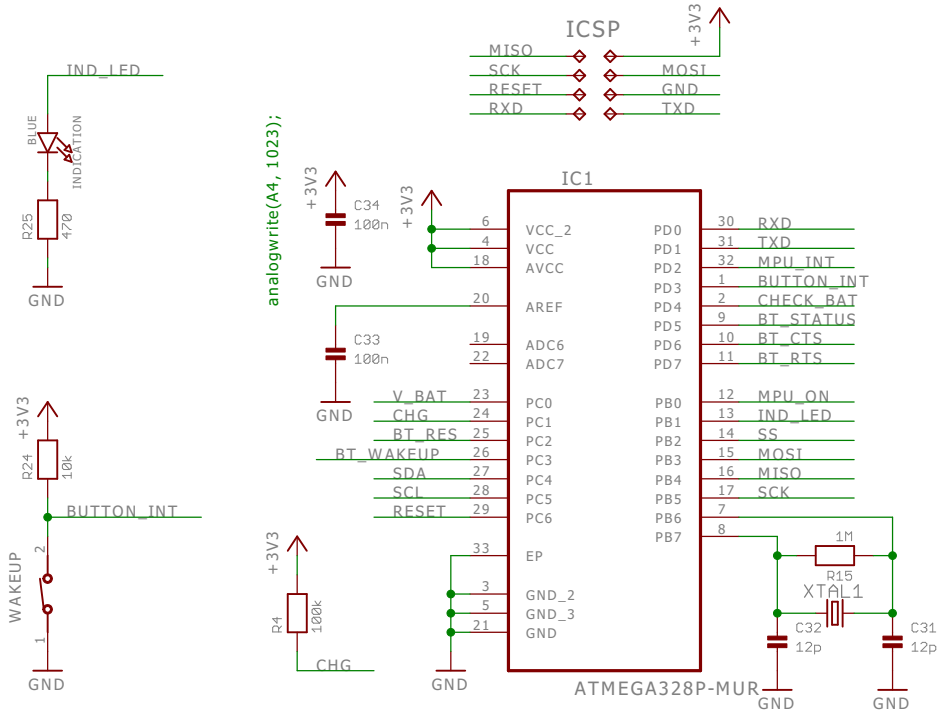

MPU6050

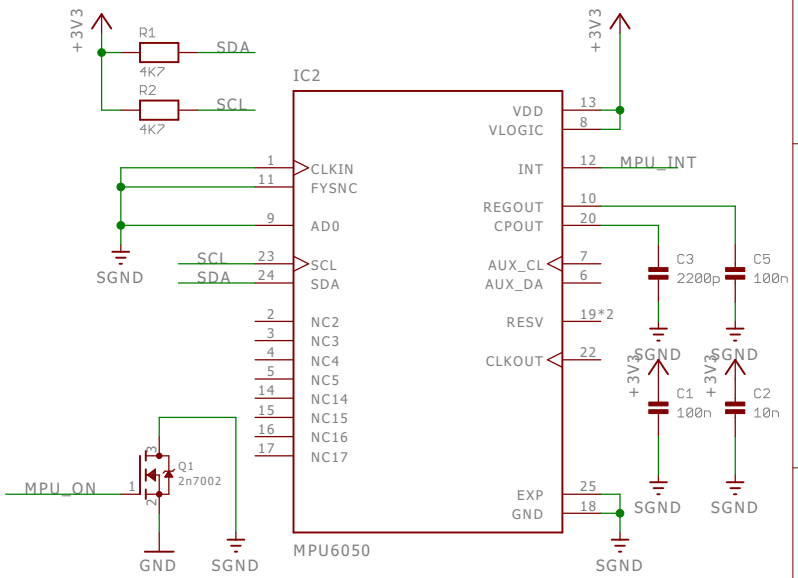

DRAMCO

MCU

Jarne Van Mulders	
design2	
03/04/2020 14:26	
Sheet: 1/3	