STM32&Sensors

File: STM32&Sensors.kicad_sch

SX1280

File: SX1280.kicad_sch

Sarah Goossens
DRAMCO
KU Leuven

Sheet: /
File: Plantensensor2d1.kicad_sch

Title: Sensor node

Size: A4	Date: 2024-07-07	**Rev: 2.1**
KiCad E.D.A. kicad (6.0.4)		Id: 1/3

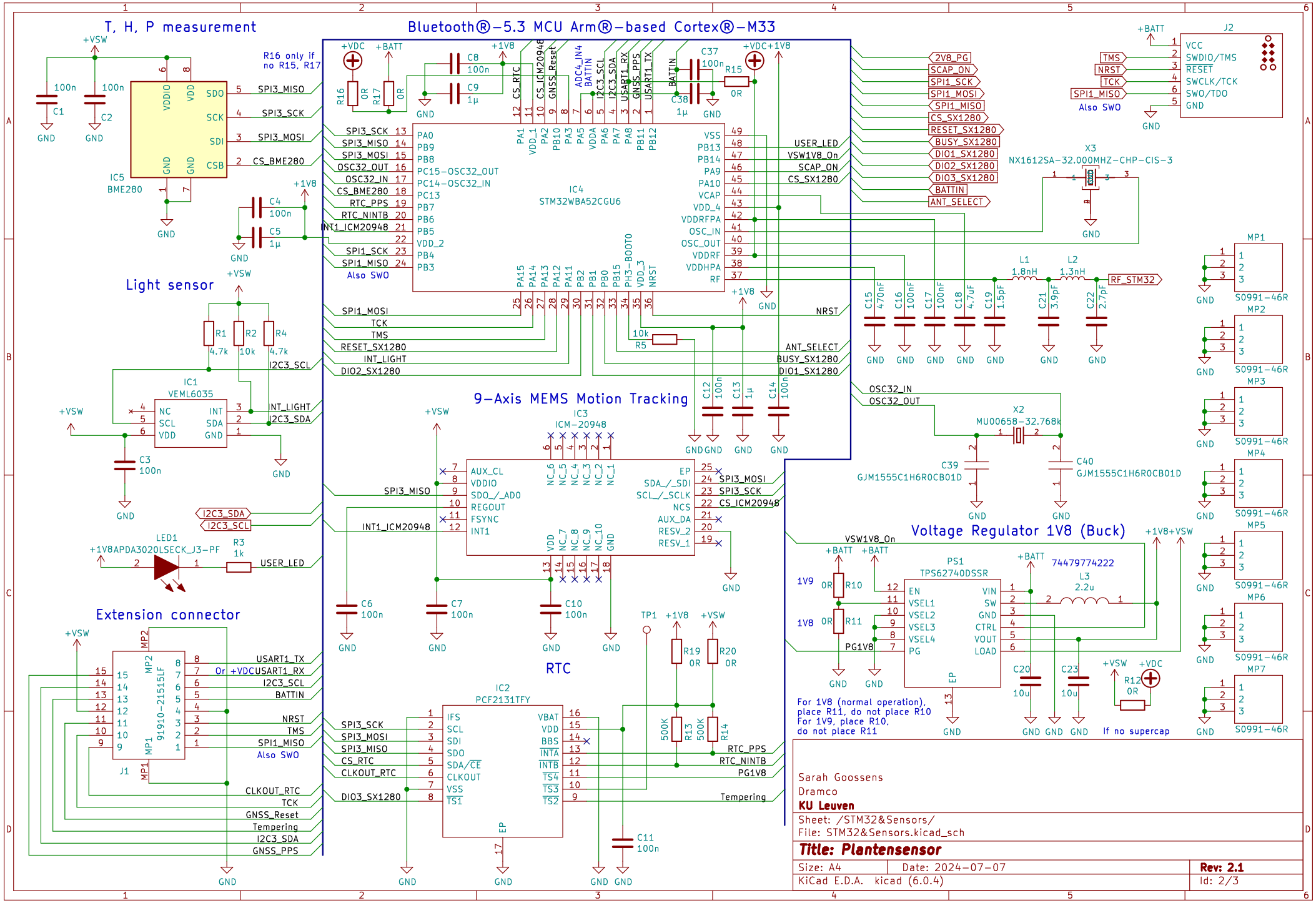
T, H, P measurement
Bluetooth®-5.3 MCU Arm®-based Cortex®-M33
Light sensor
9-Axis MEMS Motion Tracking
Voltage Regulator 1V8 (Buck)
Extension connector
RTC
IC5 BME280
IC4 STM32WBA52CGU6
IC1 VEML6035
IC3 ICM-20948
IC2 PCF2131TFY
PS1 TPS62740DSSR
J1 91910-21515LF
J2 SWDIO/TMS SWCLK/TCK
X3 NX1612SA-32.000MHZ-CHP-CIS-3
X2 MU00658-32.768k
LED1 +1V8APDA3020LSECK_J3-PF
R16 only if no R15, R17
Also SWO
For 1V8 (normal operation), place R11, do not place R10
For 1V9, place R10, do not place R11
If no supercap
Sarah Goossens
Dramco
KU Leuven
Sheet: /STM32&Sensors/
File: STM32&Sensors.kicad_sch
Title: Plantensensor
Size: A4
Date: 2024-07-07
Rev: 2.1
KiCad E.D.A. kicad (6.0.4)
Id: 2/3

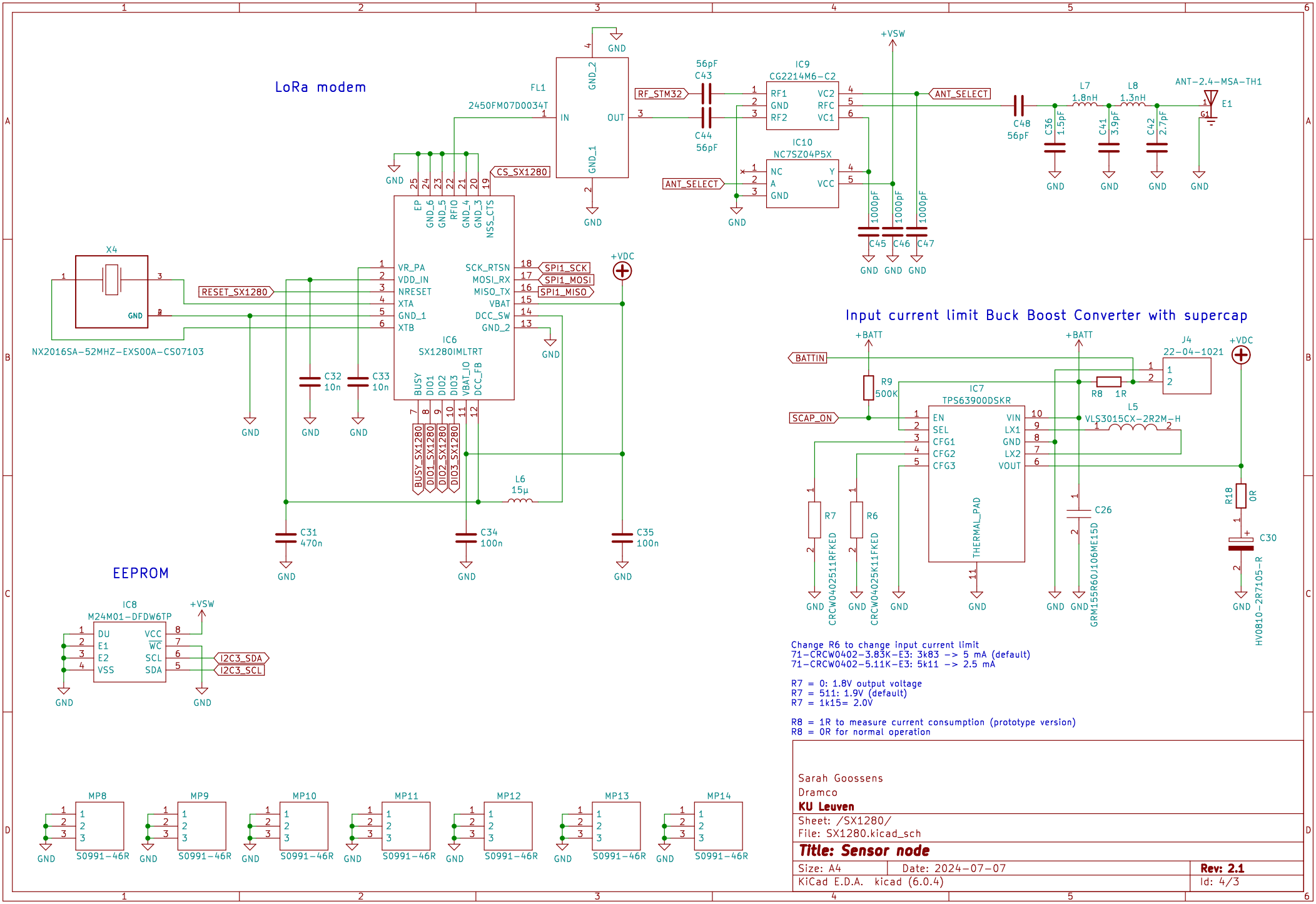
LoRa modem
FL1
2450FM07D0034T
IN
OUT
GND_2
GND_1
RF_STM32
56pF
C43
C44
56pF
IC9
CG2214M6-C2
RF1
GND
RF2
VC2
RFC
VC1
IC10
NC7SZ04P5X
NC
A
GND
Y
VCC
ANT_SELECT
+VSW
1000pF
C45
C46
C47
C48
56pF
L7
1.8nH
L8
1.3nH
C36
1.5pF
C41
3.9pF
C42
2.7pF
ANT-2.4-MSA-TH1
E1
G1
CS_SX1280
EP
GND_6
GND_5
RFIO
GND_4
GND_3
NSS_CTS
VR_PA
VDD_IN
NRESET
XTA
GND_1
XTB
SCK_RTSN
MOSI_RX
MISO_TX
VBAT
DCC_SW
GND_2
SPI1_SCK
SPI1_MOSI
SPI1_MISO
IC6
SX1280IMLTRT
BUSY
DIO1
DIO2
DIO3
VBAT_IO
DCC_FB
BUSY_SX1280
DIO1_SX1280
DIO2_SX1280
DIO3_SX1280
RESET_SX1280
+VDC
X4
NX2016SA-52MHZ-EXS00A-CS07103
C32
10n
C33
10n
L6
15µ
C31
470n
C34
100n
C35
100n
GND
Input current limit Buck Boost Converter with supercap
+BATT
BATTIN
R9
500K
SCAP_ON
IC7
TPS63900DSKR
EN
SEL
CFG1
CFG2
CFG3
VIN
LX1
GND
LX2
VOUT
THERMAL_PAD
R8
1R
L5
VLS3015CX-2R2M-H
J4
22-04-1021
R7
R6
CRCW0402511RFKED
CRCW04025K11FKED
C26
GRM155R60J106ME15D
R18
0R
C30
HV0810-2R7105-R
EEPROM
IC8
M24M01-DFDW6TP
DU
E1
E2
VSS
VCC
WC
SCL
SDA
I2C3_SDA
I2C3_SCL
MP8
MP9
MP10
MP11
MP12
MP13
MP14
S0991-46R
Change R6 to change input current limit
71-CRCW0402-3.83K-E3: 3k83 -> 5 mA (default)
71-CRCW0402-5.11K-E3: 5k11 -> 2.5 mA
R7 = 0: 1.8V output voltage
R7 = 511: 1.9V (default)
R7 = 1k15= 2.0V
R8 = 1R to measure current consumption (prototype version)
R8 = 0R for normal operation
Sarah Goossens
Dramco
KU Leuven
Sheet: /SX1280/
File: SX1280.kicad_sch
Title: Sensor node
Size: A4
Date: 2024-07-07
Rev: 2.1
KiCad E.D.A. kicad (6.0.4)
Id: 4/3