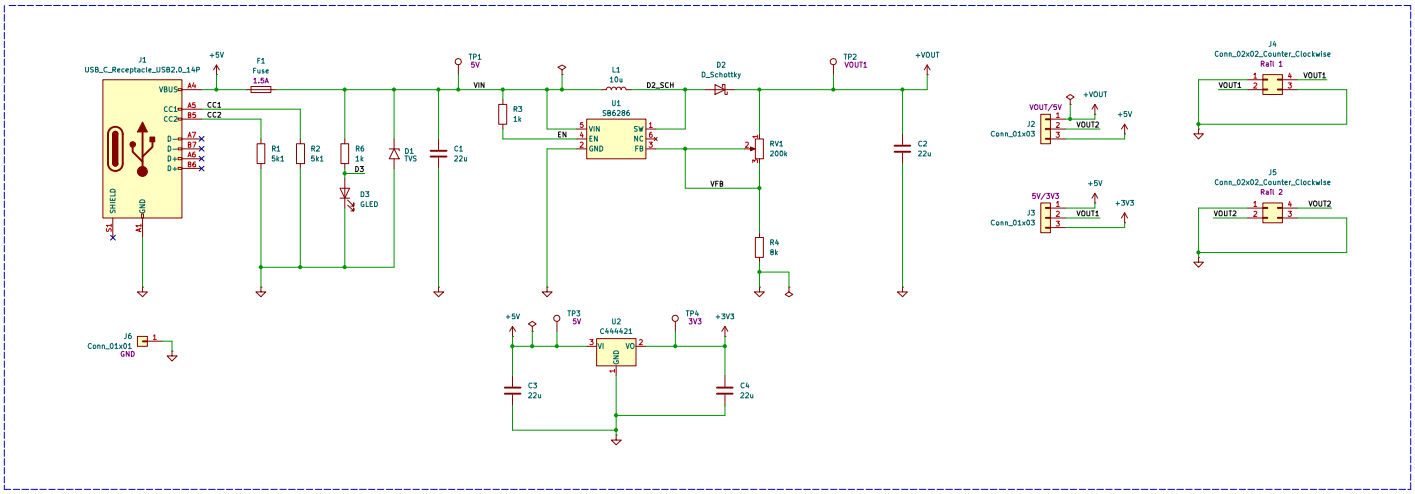# BREAD BORAD ADJUSTABLE POWER SUPPLY – 5V TO 15V & 3V3 OUTPUT