QST-in-Depth
WSPR Transmitter Construction and Programming

Bob Fontana AK3Y

The WSPR transmitter was designed to be fully modular in construction. The unit consists of three (3) plug-in modules (ESP8266 NodeMCU microcontroller, Si5351 synthesizer subassembly and a user-selectable Low Pass Filter), together with a self-contained Temperature Compensated Crystal Oscillator (TCXO) which provides the necessary frequency stability for the design.

The following set of steps will illustrate how to assemble, program and test the transmitter. Please refer to the schematic and board layouts (transmitter and low pass filter) in Appendix A below. Also note the WSPR parts kit which is shown in Appendix B.

Please refer to the Operational Considerations section below before powering up and using the transmitter.

Construction Details

STEP 1: Modify Si5351 Breakout Board

These modifications are needed in order to allow the Si5351 to use an external Temperature Controlled Crystal Oscillator (TCXO). On the component side of the Si5351 module, you will need to remove the original 25 MHz crystal from its 4 pads, and connect a short jumper wire from the lower left pad to Pin "1" on the header. On the reverse side, you will need to cut the trace leading to Pin "1". The modifications are shown in the figure below.

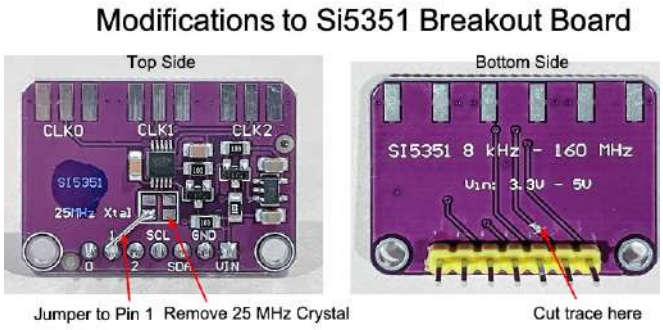

A few tips –

(a) I first remove the 25 MHz crystal by cutting a tiny piece of SRA Fast Chip (e.g., https://www.digikey.com/en/products/detail/sra-soldering-products/FASTCHIP4.5/10709813) and placing it on top of the crystal case. I then heat the case up with my iron tip, and the Fast Chip holds the heat so that I can easily remove the crystal with a pair of tweezers. Without the Fast Chip, it is trickier to get the heat to flow simultaneously to all 4 pads for removal, but it is still doable.

(b) Before soldering the jumper wire, I turn the unit over and cut the trace leading to Pin "1" (Clock 1). It is much easier to do this without the header in the way.

(c) I next attach the 7-pin header and then solder a short lead from the lower left pad of the now missing crystal to Pin "1".

That completes the necessary mods on the Si5351 breakout board.

STEP 2: Solder on all headers

The ESP8266 module typically comes with a variety of header pins included in its packaging. Five of these are shown to the left of the circuit board (see figure below). The two 8-pin MALE headers are attached to the ESP module.

The easiest way to ensure vertical alignment when soldering these headers to the ESP module is to place the headers onto a solderless breadboard which has the correct 0.1" spacings for the pins. Place the ESP microcontroller on top of these headers, and solder the connections.

The two low-profile 8-pin FEMALE headers (to the left of the circuit board) are used to plug-in the ESP82 microcontroller to the PCB. When soldering these headers to the PCB, plug the ESP module (now with its new headers) into the FEMALE headers before soldering them to the circuit board. This again will ensure correct vertical alignment.

Note that the SI5351 module only uses 7 pins, so it will be necessary to clip off one end of the 8-pin FEMALE header before soldering it to the PCB (if this has not already been done). This can easily be accomplished with a small pair of dykes.

At this point, you can also solder on the two 4-pin MALE headers onto one of the Low Pass Filter (LPF) modules. It can be used, as was done with the ESP module, to correctly align the two 4-pin FEMALE plugs for the filter on the PCB. Plug the LPF circuit board with the two MALE headers attached into the set of 2 FEMALE headers, and solder to the PCB.

Make sure that the short pins on the 6-pin connector JP1 go into the board, and that the longer pins are on top to accommodate the 3 possible header jumpers for frequency selection.

The finished assembly for STEP 1 is shown below.

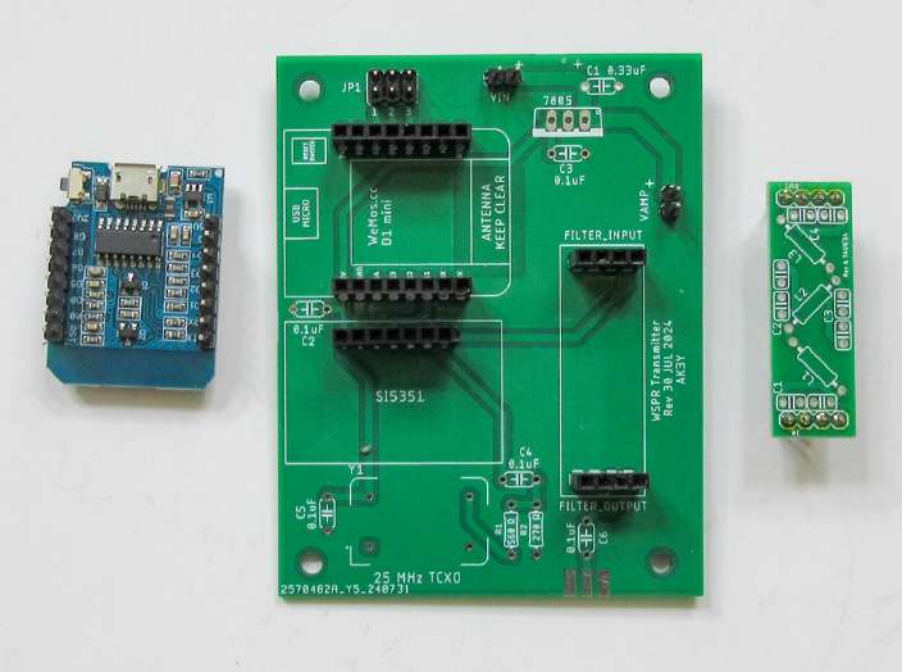

STEP 3: Solder on smaller components to main PCB

The TCXO, SMA connector, 7805 regulator chip and all small components can now be soldered to the PCB.

Watch out for the polarity on the electrolytic capacitor C1! Its positive terminal will be marked both on the component itself and on the PCB silk screen. Also, make sure that the TCXO can is aligned as shown on the PCB silk screen – one of the corners has a 90˚ angle and aligns with the corresponding hole on the PCB.

You may find it easier to solder on the SMA connector before placing capacitor C6.

IMPORTANT NOTE:

Resistors R1 and R2 form a voltage divider for the output of the TCXO module. These are used to prevent signal overload to the SI5351. There are several configurations possible here. What I have found is that, for the TCXO's in the batch that we received, using R1 = 100Ω and omitting R2 entirely worked the best. This is equivalent to placing a 100Ω resistor in series with a 0.1µF capacitor going to the clock input of the SI5351.

So, if the PCB has silk screened values for R1 and R2, ignore these and use 100Ω for R1 and do not install R2 as shown in the photo below.

The completed module (with filters for 30 meters and 10 meters – see following step) is shown below:

STEP 4: Low Pass Filter Modules

The LPF modules were designed to be pin-for-pin compatible with those available from QRP-Labs (qrp-labs.com). Aside from the two outer 4-pin MALE headers, there are three (3) T37-6 (yellow) toroids and four (4) ceramic NPO (i.e., near zero temperature drift) capacitors.

Note: The components are soldered on the silk screened side of the board, and when the boards are plugged into the motherboard, the header with "IN" on the silk screen should be plugged into the female header labeled FILTER_INPUT.

QRP-Labs assembly instructions for these filters are attached below in Appendix D. Note that there are two possible positions for each capacitor. This was done to accommodate paralleling capacitors as needed for the lower frequency bands. For 80 through 10 meters, only a single capacitor is needed at each position, so only one of these set of holes is used for each capacitor.

Sufficient enamel-coated wire is supplied for the construction of two filters; and, capacitors are provided for the 30- and 10-meter bands (as shown in the table).

The easiest way to construct these filters is to wind the appropriate number of turns as shown in the table, and then use a small piece of sandpaper to scrape the enamel off the ends of the wires for insertion into the boards. Note that every pass through the toroid constitutes a turn, so don't forget to count that first pass through the toroid's center.

After the toroids have been soldered to the boards, make sure that they are turned so as to be approximately at 90˚ to each other. This further minimizes cross coupling, although most of the magnetic fields will be confined to the toroidal material. Finally, solder in the capacitors as indicated in the table.

STEP 5: Programming the ESP8266 (Software Revision for Access Point Operation)

The ESP8266 can be programmed using the Arduino Integrated Development Environment (IDE). This can be downloaded from

https://www.arduino.cc/en/software.

Versions of the IDE are available for Windows, Linux and the Macintosh OS.

Once downloaded, open the WSPR Transmitter code (WSPR_WiFi.ino).

Note: Because of file management quirks in the Arduino IDE application, you may find that the WSPR_WiFi.ino code will not load properly when using the latest (at the time of print) Arduino IDE 2.3.3. If you find this to be the case, download and use the Arduino Legacy IDE (currently version 1.8.19). This legacy version works well under Mac, Windows and Linux OS.

Next, we need to setup the IDE to recognize the ESP8266 NodeMCU microcontroller:

(a) Select "File… Preferences…" and add the following line to the dialog box following "Additional boards manager URLs":

http://arduino.esp8266.com/stable/package_esp8266com_index.json

This sets up the IDE to recognize the ESP8266 hardware.

(b) Select "Sketch… Include library… Manage Libraries…" and search for "**Etherkit JTEncode**", "**Etherkit Si5351**" and "**DoubleResetDetector**", the latter by Stephen Denne. When these libraries are found, click on "Install" for each.

This loads the library files which handle the WSPR encoding process, control of the Si5351 synthesizer module, and the use of the ESP8266's Reset Button as a "Wi-Fi on Demand" trigger (see below).

(c) Select "Tools… Board… Boards Manager…" and look for "NodeMCU". "esp8266 by ESP8266 Community" will appear. Install this code – this process may take several minutes.

(d) Select "Tools… Board… esp8266…" and select "NodeMCU 0.9 (ESP-12 Module)". The Arduino IDE will install the necessary code to manage this particular microcontroller.

(e) You are now ready to compile and upload the code to your WSPR board. Make sure that the USB cable is attached to the ESP8266 module and that you have the USB port selected in the Arduino IDE ("Tools… menu)[1]:

Click on the compile and upload arrow (right arrow next to check mark in IDE).

STEP 6: Operating the WSPR Transmitter

Any serial monitor can be used to observe the status updates from the WSPR unit. Initially, as you program the unit for the first time, the Arduino IDE's Serial Monitor (see picture) can be used – click on the icon at the upper left of the IDE window and set the Serial Monitor baud rate to 9600.

[1] NOTE: The ESP8266 uses the FTDI virtual COM port driver. If your operating system does not have this driver installed, you can download it from http://ftdichip.com/drivers/vcp-drivers.

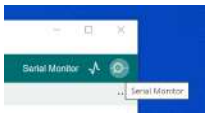

Other good options for a serial monitor are CoolTerm (https://freeware.the-meiers.org) for Mac, Windows and Linux; and puTTY (https://putty.org) for Windows platforms.

When the WSPR unit is run for the first time, it will set itself up as an Access Point (AP). From any WiFi-enabled device (computer, smart phone, etc.), log into this AP which has an SSID of "WSPRSetup"). No password is needed for the AP.

Once, logged in, the following dialog box will appear:

If this dialog box does not appear, simply go URL 192.168.4.1 and the same information will appear.

Next, click on “Configure WiFi” to setup the WSPR user parameters:

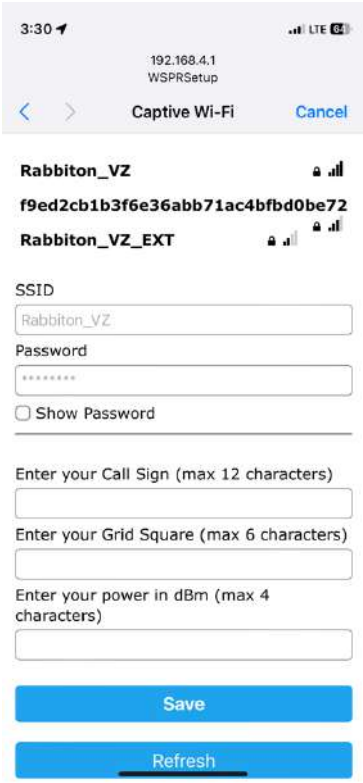

In this dialog box, you can select (or change) your WiFi portal, as well as modify your call sign, grid square and power level. This can be extremely useful when not operating from your home QTH, or if you wish to pick another WiFi network.

Here are some guidelines for entering information into this dialog box:

(a) Call signs (without prefixes or suffixes) can be of lengths up to 6 characters; e.g., K1F (a special event station), N2FYA, KA3FQD, etc.;

(b) Grid squares can be either of length 4 (e.g., FM19) or length 6 (e.g., FM19ja). You will find that WSPRnet will store the most detailed grid square that it sees for you. So, if you once had spots using grid square FM19ja, for example, and later change your transmissions to simply have FM19, your spots may still show up as coming from FM19ja.;

(c) Power levels can range only from 0 dBm to 60 dBm (WSPR data protocols do not allow for negative values for dBm, so the minimum power level that you can specify is 0 dBm or 1 milliWatt.). If you enter a decimal value, e.g. 23.6, the code will use the closest lower integer – in this case, 23.

(d) If you wish to add a prefix or suffix to your call sign (e.g., operating from a foreign country, operating in a different call district, operating portable, etc.), you must place this information within brackets < >. These are called Type 3 WSPR broadcasts.

Examples include <AK3Y/4> for AK3Y operating in the 4th call area, <F/KA3FQD> for KA3FQD operating from France, etc.

You can have up to 3 prefix characters and 1 suffix character, each separated by the slash “/” symbol. However, if you do use these Type 3 broadcasts, the entire call sign must be entered between < and >

symbols. **Also, for Type 3 broadcasts, you MUST use a length 6 grid square** – e.g., FM19ja. Also note that there is a limit of 12 characters for the call sign and this includes the < and > symbols.

Many WSPR decoders will display Type 3 WSPR broadcast calls only as <…>. However, the spots on WSPRnet.org will show the full call sign and your spot information can be retrieved by using the Type 3 call sign information *without* the brackets <>. That is, transmit <AK3Y/4> but search WSPRnet.org using AK3Y/4 without the brackets.

Once you enter this data, click on SAVE and it will be uploaded to the flash RAM on the ESP8266.

The ESP8266 family doesn't have genuine EEPROM memory so it is emulated by using a section of flash memory; however, the effect is the same. Your data (WiFi parameters, call sign, grid square and power level) are stored in a nonvolatile manner and are saved between sessions.

The new WiFi credentials and WSPR data are then used for subsequent transmissions. When the WSPR transmitter goes into transmit mode, a blue light will appear on the module and remain on until the transmission is ended. This process will repeat indefinitely until the unit is powered off, or the "Wifi on Demand" function is initiated.

WiFi on Demand

If you want to change the parameters of your WSPR transmission, this can be done easily without having to reprogram the microcontroller. This feature is called "WiFi on Demand" and is activated using the tiny pushbutton switch which can be found on the ESP8266 module to the left of its USB connector.

To activate this feature, press the switch twice within 10 seconds. This places the ESP8266 back in Access Point mode, and you can simply modify your information as described above.

Note: If the WSPRSetup access point does not appear after a few seconds in your list of available hot spots, try pressing the switch again a couple of times. This can happen when you are trying to go into WiFi on Demand mode when the unit is in its transmitting state. The microcontroller may not have seen the interrupt during this cycle. A good way of determining whether your WSPR module is back into Access Point mode is to monitor its output on a serial monitor as described above.

Power Level Adjustments

Note: The barefoot WSPR transmitter should provide between 10 and 12 dBm (10 to 16 milliWatts) RF output after the low pass filter. This is often more than adequate power to be received across the globe on many bands. However, if an external amplifier is needed or desired, it is important to make sure that this drive level does not push the following amplifier into compression as this would result in the reintroduction of harmonics that we have carefully filtered out.

The output power from the WSPR transmitter can be adjusted to over an approximate 6 dB range by modifying line 96 of the code:

si5351.drive_strength(SI5351_CLK0, SI5351_DRIVE_8MA); // Set for max power output

Instead of SI5351_DRIVE_8MA which would result in the maximum output power, this parameter can be set to SI5351_DRIVE_xMA where x is 2, 4, 6 or 8 – 2 being the minimum power level (or around +4 dBm or 2.5 mW) and 8 being the maximum (around +10 dBm or 10 mW).

Alternatively, or in addition, an SMA RF attenuator can be connected between the WSPR transmitter output and the input to the external amplifier. These can be obtained very inexpensively from eBay and other sources.

Operational Considerations

1. Powering the WSPR Transmitter

The WSPR transmitter can be powered using either the Vin terminals (2 pin header next to the 7805 regulator chip) or via the USB port on the ESP8266 microcontroller. (Note: the USB connector may be either a micro-USB or type C.)

If powering the unit off of the Vin terminals, the input voltage range MUST be limited to the range of 7.5 to 18.0 Volts. The Vin terminals are also directly connected, through a heavy PCB trace, to the Vamp header on the board (next to the LPF module). This header can be used to power an external RF power amplifier using a jumper cable from the WSPR module.

As mentioned, the unit can also be powered via the USB port on the microcontroller. The microcontroller subassembly provides the regulated voltages needed by the synthesizer and the TCXO. However, in this case, the Vamp terminals on the WSPR board should NOT be used, as the USB connection will not provide sufficient power for an external amplifier. With USB power, an external supply should be used for any external amp.

2. FCC Restrictions on Transmitter Use

The WSPR transmitter can be configured, via software modifications, to transmit on any frequency from near DC to 30 MHz or so. As a consequence, it is extremely important to make sure that you are transmitting in a band which is allocated to amateur use and which is legal to operate on with your class of license.

The software code has a table of frequencies that are, by convention, used for WSPR activity from 160 meters through 10 meters, inclusive. (2200 meters at 136.000 kHz or 630 meters at 474.200 kHz can be added for those with operational privileges on these bands – See **https://www.arrl.org/news/fcc-opens-630-and-2200-meter-bands-stations-must-notify-utc-before-operating** on how to obtain authorization to operate on these two lower bands.)

For Novice and Technician class licensees, the ONLY band on which you are allowed to use digital techniques is the 10 meter band. The good news is that the 10 meter band has been extremely good for worldwide propagation and will continue to remain so for several years to come due to increased sunspot activity!

3. Frequency Selection

The WSPR transmitter allows for the selection of up to 8 different frequencies through the use of a 3-position jumper "J1" located at the edge of the printed circuit board next to the ESP8266 microcontroller. The J1 pins are labeled 1, 2 and 3.

The particular set of 8 frequencies used can be modified by the user in line 82 of the code:

```
unsigned long freq[] = {freq80, freq40, freq30, freq20, freq17, freq15, freq12, freq10};  // Choose 8 possible transmit frequencies
```

where freq80, freq40, etc. are those WSPR center frequencies listed in lines 71 through 80 of the code. Additional lines for 2200 meters and 630 meters can be added if desired.

For example, you can simply add the following lines for those bands and include them in the freq[] definition above:

```
unsigned long freq2200 = 136000UL + offset;     // 2200 meter band
unsigned long freq630 = 474200UL + offset;     // 630 meter band.
```

Note that these are the *nominal* frequencies assigned for WSPR in the various bands, and it is necessary that you choose a frequency offset to place your signal somewhere within the 3 kHz upper sideband segment *above* this frequency. To do this, simply modify line 69 of the code:

```
unsigned long offset = 1500UL;                // Offset from nominal WSPR frequency
```

A value of 1500 for the offset will place your signal right in the middle of the WSPR allocation, and is a very good starting point. You can play with this offset, varying it from near 0 to 3000 to move your signal away from a potentially close by station. (Check out the *Activity* area of the wsprnet.org website to see which stations are located where in frequency – see 4. below)

To select the WSPR band that you want to use, you need to place the appropriate header jumpers at J1 (3 are provided in the kit), and also use the appropriate low pass filter to prevent harmonics from being transmitted. The header jumpers are configured as follows ("1", "2" and "3" are the positions marked on the printed circuit board at J1):

Header Position	1	2	3
80 meters	1	1	1
40 meters	1	1	0
30 meters	1	0	1
20 meters	1	0	0
17 meters	0	1	1
15 meters	0	1	0
12 meters	0	0	1
10 meters	0	0	0

A "0" in the table under Header Position x indicates that no jumper should be installed in position x; while a "1" in the table indicates that a jumper should be installed in that position. As examples, for 10 meters no jumpers are installed, but for 30 meters jumpers are installed in positions "1" and "3".

4. Determining your 4 or 6 Digit Grid Square

A very good way of determining your 4 or 6 digit grid square for entry into the WSPR parameters is to use the interface at **https://www.levinecentral.com/ham/grid_square.php**. Here, you can enter your call sign or street address and the grid square information, along with a map of your locality, will be generated.

If you are traveling or in a new locale, another useful tool is the app **Where Am I** available for both Android and Mac OS. The info from Where Am I can be entered into link above.

5. WSPR Spots

To see where your WSPR signal has been received, simply log into http://www.wsprnet.org. You will need to create a free account to access the data on this site. The most useful information can be found in *Activity*, *Map* and *Database*. *Activity* provides a list of all the currently active WSPR transmitters throughout the globe (those that have been seen somewhere within the last 10 minutes). *Map* provides a world map which displays the grand

circle paths to all of the stations that have received your signal; and *Database* shows a running list of your spots together with your signal report and distance/grid square from the receiving station.

6. Amplifier Operation (Optional)

For our club project, we provided a small, outboard RF amplifier to boost the output power from the barefoot WSPR transmitter. There are numerous vendors for this unit, an example of which is from AliExpress (https://www.aliexpress.us/item/3256806318560768.html).

The amplifier module is specified by the manufacturer to deliver 2W at 12V DC input over the frequency range 1 to 930 MHz; however, the unit provides usable gain with a DC supply from 6 to 15 Volts, albeit at lower output power levels at the lower voltages, and its frequency response is actually much better than specified.

This amplifier module has a LOT of gain so it is important to make sure as to not overdrive the unit. The module makes a great RF amplifier for an SDR receiver, and is usable as such to better than 2 GHz.

Here are some measurements taken on a sample unit:

Gain 3 to 30 MHz:	54.8 to 48.8 dB
Gain at 630 meters (475 kHz):	51.8 dB
-1 dB compression at 10 MHz:	+27.9 dBm (617 mW) at 9V supply voltage
	+30.25 dBm (1.06 W) at 12V supply voltage
	+31.54 dBm (1.43 W) at 15V supply voltage

The unit can be pushed to its claimed 2 Watts output, however it is absolutely not recommended as the unit would be operating well past its -1 dB compression point.

With a measured gain of 50.9 dB at 10 MHz, the maximum drive level for the amplifier (to keep it below its -1 dB compression point) is:

-23 dBm at 9V
-20.6 dBm at 12V
-19.4 dBm at 15V

With a nominal +10 dBm output, this implies that something on the order of a 30 dB pad should be placed between the WSPR transmitter and the RF amplifier. With a 30 dB pad, I measured the following output powers from the amplifier at 28 MHz:

560 mW at 9V
750 mW at 12V
910 mW at 15V.

These output powers are well under the -1 dB compression point of the amplifier, and produce spectrally clean outputs. Note that these are LARGE power levels for WSPR, and are more than adequate to span the globe.

30 dB pads are available from a variety of sources (e.g., Aliexpress, eBay, etc.), but a simple one can be made with 3 resistors in a π-configuration:

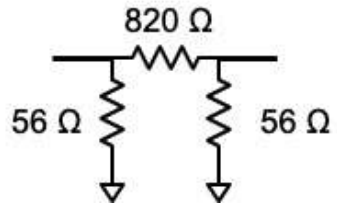

Again, this 30 dB pad should be added between the WSPR transmitter output and the amplifier input.

Appendix A

Transmitter Schematic

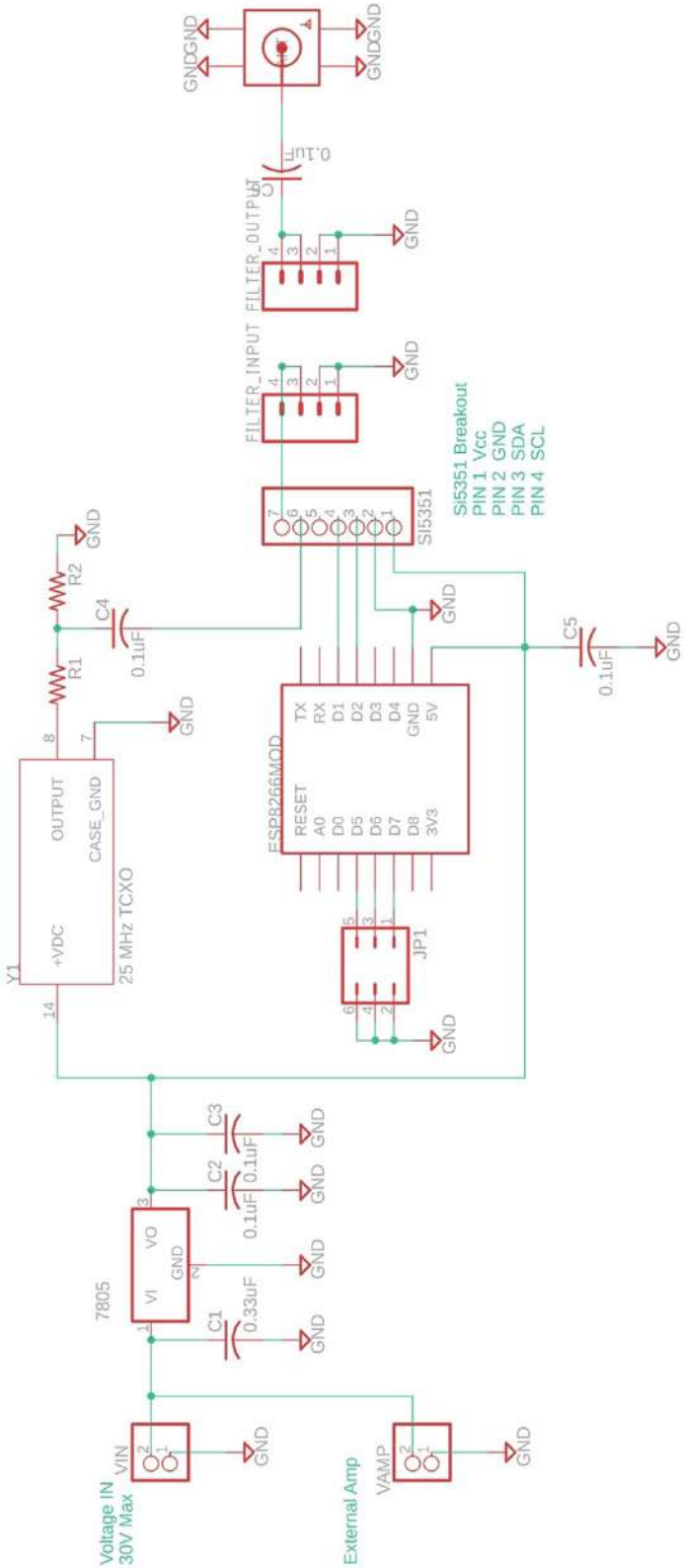

Low Pass Filter Board Schematic

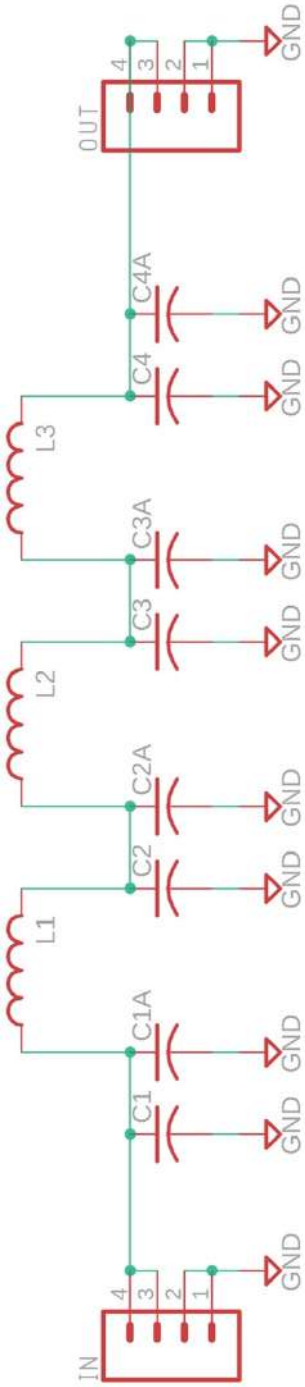

Note: The circuit board includes provisions for paralleling each of the individual filter capacitors to permit higher values. This is primarily useful for the 2200 meter (136 kHz) and 630 meter (475 kHz) bands where large values of capacitance are needed but may not be available in a single package. For 160 through 10 meters, only one capacitor is needed in each parallel leg.

This circuit board was modeled after the QRP-Labs design, and is pin-for-pin compatible.

Printed Circuit Boards

Transmitter Board (Component Side)

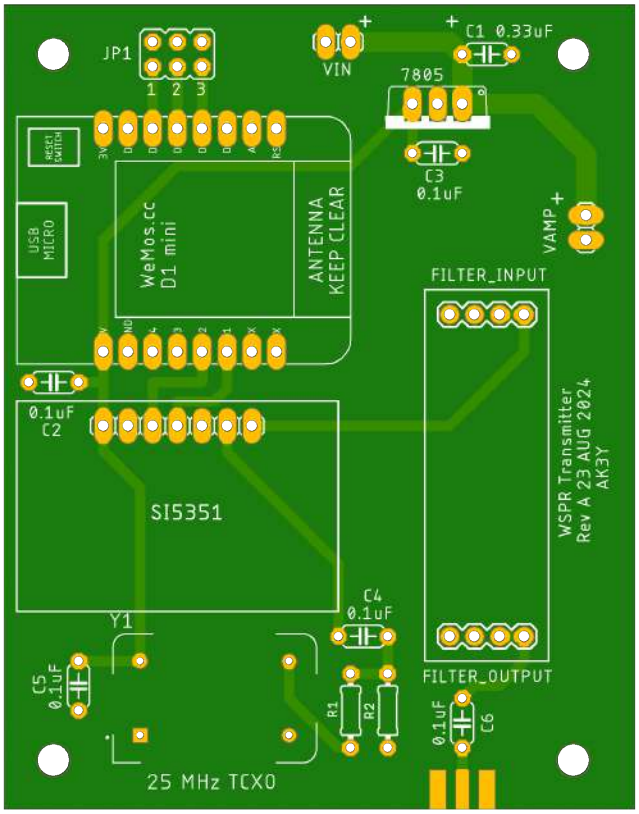

Low Pass Filter Board (Component Side)

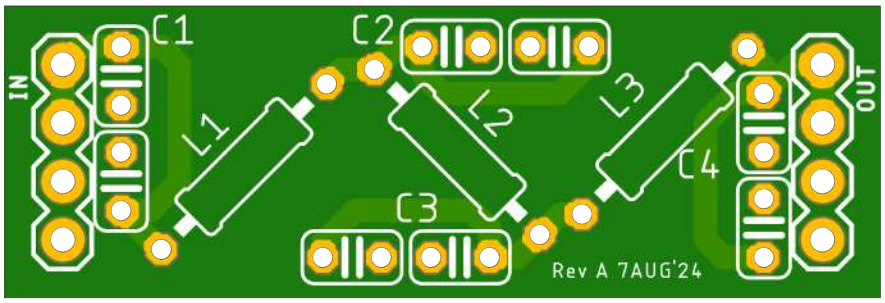

Appendix B
WSPR Parts Kit

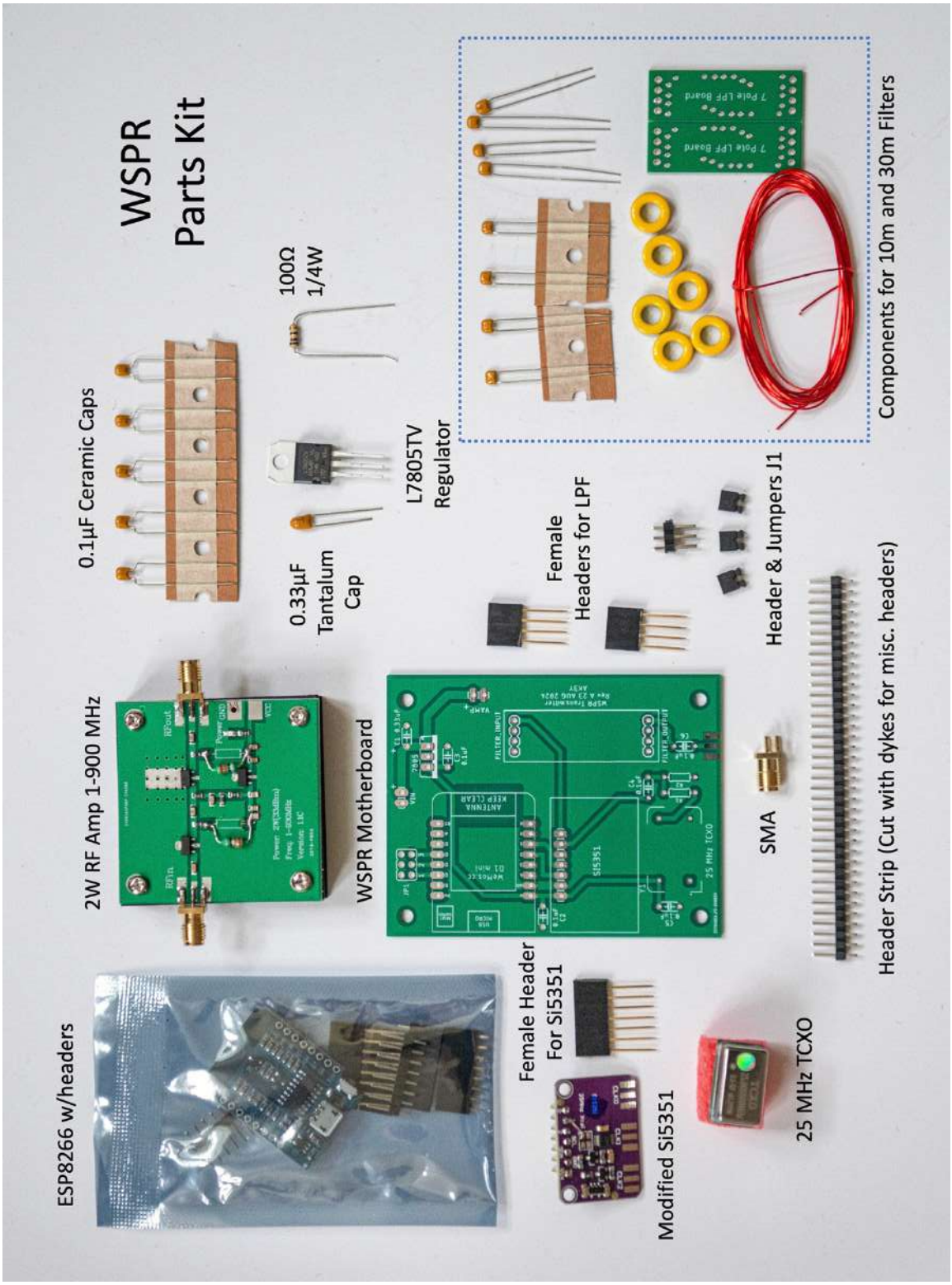

Appendix C
Low Pass Filter Component Values

The Table below gives the capacitance and inductance values for a 7-pole Chebyshev low pass filter design with corner frequency at the high end of each band. The inductance values (in parentheses) are obtained with the number of turns listed wound on the toroidal material given in the last column.

9Band	C1	C2	C3	C4	L1/L3	L2	Toroid
2200m	2.2n//10n	4.7n//22n	4.7n//22n	2.2n//10n	105 (54uH)	105 (54uH)	T50-2 (red)
600m	2.2n//2.2n	10n	10n	2.2n//2.2n	64 (20uH)	70 (24uH)	T50-2 (red)
160m	820	2200	2200	820	30 (4.44uH)	34 (5.61uH)	T50-2 (red)
80m	470	1200	1200	470	25 (2.42uH)	27 (3.01uH)	T37-2 (red)
60m	680	1200	1200	680	23 (2.12uH)	24 (2.30uH)	T37-2 (red)
40m	270	680	680	270	21 (1.38uH)	24 (1.70uH)	T37-6 (yellow)
30m	270	560	560	270	19 (1.09uH)	20 (1.26uH)	T37-6 (yellow)
20m	180	390	390	180	16 (773nH)	17 (904nH)	T37-6 (yellow)
17m	100	270	270	100	13 (548nH)	15 (668nH)	T37-6 (yellow)
15m	82	220	220	82	12 (444nH)	14 (561nH)	T37-6 (yellow)
12m	100	220	220	100	12 (438nH)	13 (515nH)	T37-6 (yellow)
10m	56	150	150	56	10 (303nH)	11 (382nH)	T37-6 (yellow)
6m	22	82	82	22	7 (165nH)	9 (265nH)	T37-6 (yellow)
4m	10	56	56	10	6 (110nH)	7 (150nH)	T37-6 (yellow)
2m	22	33//10	33//10	22	3	3	None (air)
222M	22	33//10	33//10	22	2	2	None (air)

* Note: The current WSPR transmitter design is capable of operating from 2200 meters to 10 meters due to the frequency limitations of the SI5351 module used.

The low pass filter circuit boards provided in the WSPR kit were modeled after similar units from QRP-Labs. They have the exact same overall dimensions and header placements, so if you currently have one of their filters, it can be used directly in this transmitter. In Appendix D, the assembly instructions from QRP-Labs are provided and may be useful to you in wiring up your filters.

Appendix D

Extracted from https://www.qrp-labs.com/images/lpfkit/assembly_LT.pdf

QRP Labs

Low Pass Filter kit assembly instructions

1. Introduction

A low pass filter (LPF) is required following the power amplifier of a transmitter to attenuate unwanted emissions on harmonic frequencies. This 7-element Low Pass Filter kit is based on the G-QRP technical notes, a design by Ed Wetherhold W3NQN.

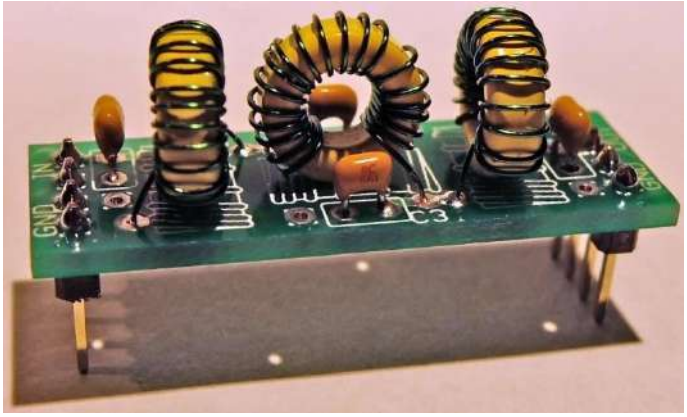

2. Design

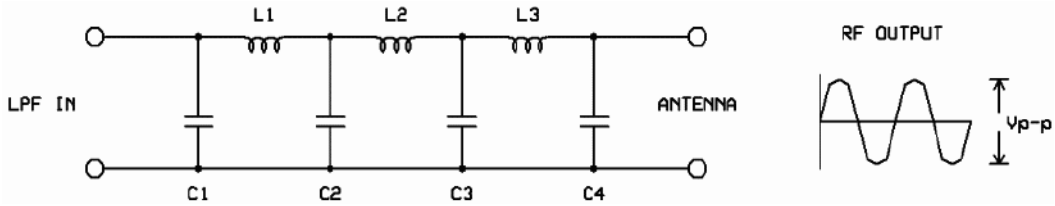

The design uses four capacitors and three inductors wound on toroids, and has 50-ohm input and output impedance. The small PCB has a 4-pin plug at its input and output. It is designed to fit onto the "Ultimate/2/3/3S" multi-mode QRSS/WSPR transmitter kits, but may of course be used as a LPF for other QRP transmitter designs. It also fits the relay-switched LPF kit.

The kit is supplied with high-quality low-loss class-1 dielectric (CC4) RF ceramic capacitors of the C0G type (NP0, meaning near-zero temperature drift).

3. Parts List

Please refer to the parts list below for your band. Capacitor values are in picofarads (pf) except where indicated (600m and 2200m LF band values are in nanofarads) and the inductors L1-3 specify the number of turns to wind on the toroid. L1 and L3 are the same. L2 has the higher number of turns. The inductor value is indicated in brackets after the number of turns.

9Band	C1	C2	C3	C4	L1/L3	L2	Toroid
2200m	2.2n//10n	4.7n//22n	4.7n//22n	2.2n//10n	105 (54uH)	105 (54uH)	T50-2 (red)
600m	2.2n//2.2n	10n	10n	2.2n//2.2n	64 (20uH)	70 (24uH)	T50-2 (red)
160m	820	2200	2200	820	30 (4.44uH)	34 (5.61uH)	T50-2 (red)
80m	470	1200	1200	470	25 (2.42uH)	27 (3.01uH)	T37-2 (red)
60m	680	1200	1200	680	23 (2.12uH)	24 (2.30uH)	T37-2 (red)
40m	270	680	680	270	21 (1.38uH)	24 (1.70uH)	T37-6 (yellow)
30m	270	560	560	270	19 (1.09uH)	20 (1.26uH)	T37-6 (yellow)
20m	180	390	390	180	16 (773nH)	17 (904nH)	T37-6 (yellow)
17m	100	270	270	100	13 (548nH)	15 (668nH)	T37-6 (yellow)
15m	82	220	220	82	12 (444nH)	14 (561nH)	T37-6 (yellow)
12m	100	220	220	100	12 (438nH)	13 (515nH)	T37-6 (yellow)
10m	56	150	150	56	10 (303nH)	11 (382nH)	T37-6 (yellow)
6m	22	82	82	22	7 (165nH)	9 (265nH)	T37-6 (yellow)
4m	10	56	56	10	6 (110nH)	7 (150nH)	T37-6 (yellow)
2m	22	33//10	33//10	22	3	3	None (air)
222M	22	33//10	33//10	22	2	2	None (air)

The following table is the same except that it shows the capacitor marking. The capacitor markings usually use a three digit code, where the first two digits are the value and the 3rd digit is the number of zeroes of the capacitance in pico-farads. So for example, “560” = 56pF, “271” = 270pF and “472” = 4700pF (4.7nF). You may need a magnifying glass or jeweller's loupe to view the marked value clearly. The inductor value is indicated in brackets after the number of turns.

Band	C1	C2	C3	C4	L1/L3	L2	Toroid
2200m	222+103	472+223	472+223	222+103	105 (54uH)	105 (54uH)	T50-2 (red)
600m	222+222	103	103	222+222	64 (20uH)	70 (24uH)	T50-2 (red)
160m	821	222	222	821	30 (4.44uH)	34 (5.61uH)	T50-2 (red)
80m	471	122	122	471	25 (2.42uH)	27 (3.01uH)	T37-2 (red)
60m	681	122	122	681	23 (2.12uH)	24 (2.30uH)	T37-2 (red)
40m	271	681	681	271	21 (1.38uH)	24 (1.70uH)	T37-6 (yellow)
30m	271	561	561	271	19 (1.09uH)	20 (1.26uH)	T37-6 (yellow)
20m	181	391	391	181	16 (773nH)	17 (904nH)	T37-6 (yellow)
17m	101	271	271	101	13 (548nH)	15 (668nH)	T37-6 (yellow)
15m	820	221	221	820	12 (444nH)	14 (561nH)	T37-6 (yellow)
12m	101	221	221	101	12 (438nH)	13 (515nH)	T37-6 (yellow)
10m	560	151	151	560	10 (303nH)	11 (382nH)	T37-6 (yellow)
6m	220	820	820	220	7 (165nH)	9 (265nH)	T37-6 (yellow)
4m	100	560	560	100	6 (110nH)	7 (150nH)	T37-6 (yellow)
2m	220	330+100	330+100	220	3	3	None (air)
222M	220	330+100	330+100	220	2	2	None (air)

4. Construction

Parts placement is defined by the printed legend on the PCB. Please refer to the parts placement diagram below. Note that all capacitor positions have space for 2 capacitors which are connected in parallel, this is to accommodate the required capacitance values for some Bands, which require two capacitors paralleled to make the right value. The PCB can also accommodate either 2.54mm spaced capacitor pins or 5.08mm (0.1 inch or 0.2 inch).

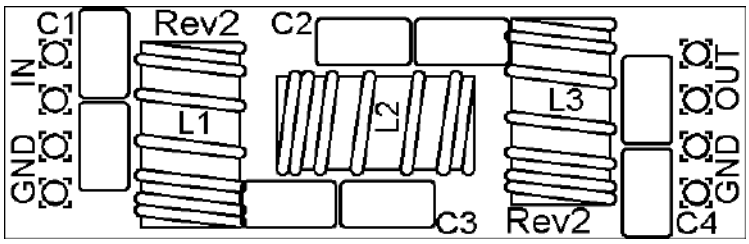

The PCB is quite small and the parts are close together. You are recommended to use a low wattage iron with a fine tip, and fine solder e.g. 1mm diameter or less. Take care not to overheat the PCB and risk damaging it. A well-lit area and magnifying glass may assist. Be careful not to bridge solder across closely-packed connections. I recommend checking with a DVM to make sure no solder bridges have been inadvertently created. Take care to ensure correct alignment of the 4-pin plugs.

Winding the toroids is quite straightforward, and the supplied wire should be enough for all three toroids, just divide it into three pieces. Remember that each time the wire goes through the centre of the toroid counts as one turn. You should aim to fill about 90% of the core (330-degrees). Leave a small gap between the winding ends, approx 10% of the core (30-degrees) to prevent capacitance effects between the ends. Labelling the toroids aids identification later! Trim the ends of the wire, scrape the enamel off and tin them with solder.

As an alternative to scraping the enamel off, my preferred method is to trim the wire ends back to 2mm below the board, then solder them with a small blob of solder. I hold the iron on the joint for 10 seconds. After about 7-8 seconds you can see the enamel bubble away and the solder sticks to the copper, making a good joint with the board. Check continuity on the board with a DVM.

At each capacitor position the PCB provides space for two capacitors in parallel, required for the the LF band kits. For capacitors having 5mm spaced wires, you can insert the capacitor wires into two holes as in this example.

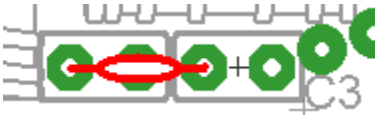
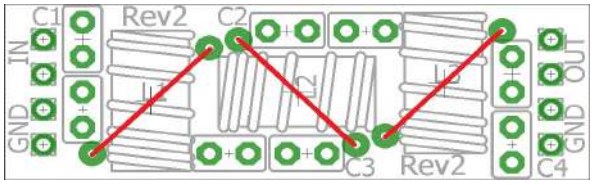
Since it can be confusing to see which holes are used for the toroid wires, this image (below) paints red lines between the holes designed for the inductor wires.