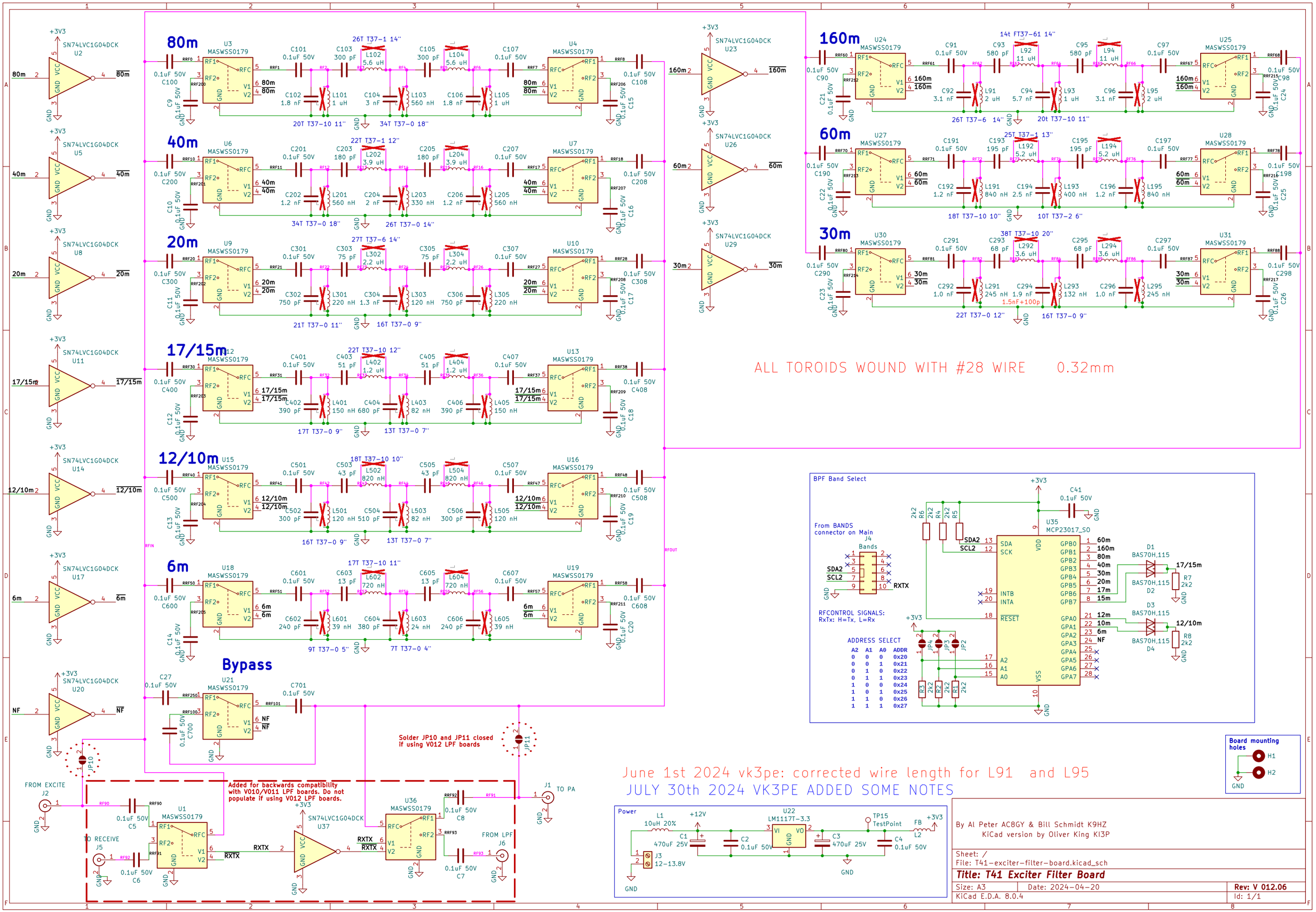
80m
40m
20m
17/15m
12/10m
6m
Bypass
160m
60m
30m
ALL TOROIDS WOUND WITH #28 WIRE 0.32mm
BPF Band Select
From BANDS connector on Main J4
RFCONTROL SIGNALS:
RxTx: H=Tx, L=Rx
ADDRESS SELECT
A2 A1 A0 ADDR
0 0 0 0x20
0 0 1 0x21
0 1 0 0x22
0 1 1 0x23
1 0 0 0x24
1 0 1 0x25
1 1 0 0x26
1 1 1 0x27
Solder JP10 and JP11 closed if using V012 LPF boards
Added for backwards compatibility with V010/V011 LPF boards. Do not populate if using V012 LPF boards.
FROM EXCITE J2
TO RECEIVE J5
TO PA J1
FROM LPF J6
Board mounting holes
June 1st 2024 vk3pe: corrected wire length for L91 and L95
JULY 30th 2024 VK3PE ADDED SOME NOTES
Power
By Al Peter AC8GY & Bill Schmidt K9HZ
KiCad version by Oliver King KI3P
Sheet: /
File: T41-exciter-filter-board.kicad_sch
Title: T41 Exciter Filter Board
Size: A3
Date: 2024-04-20
Rev: V 012.06
KiCad E.D.A. 8.0.4
Id: 1/1