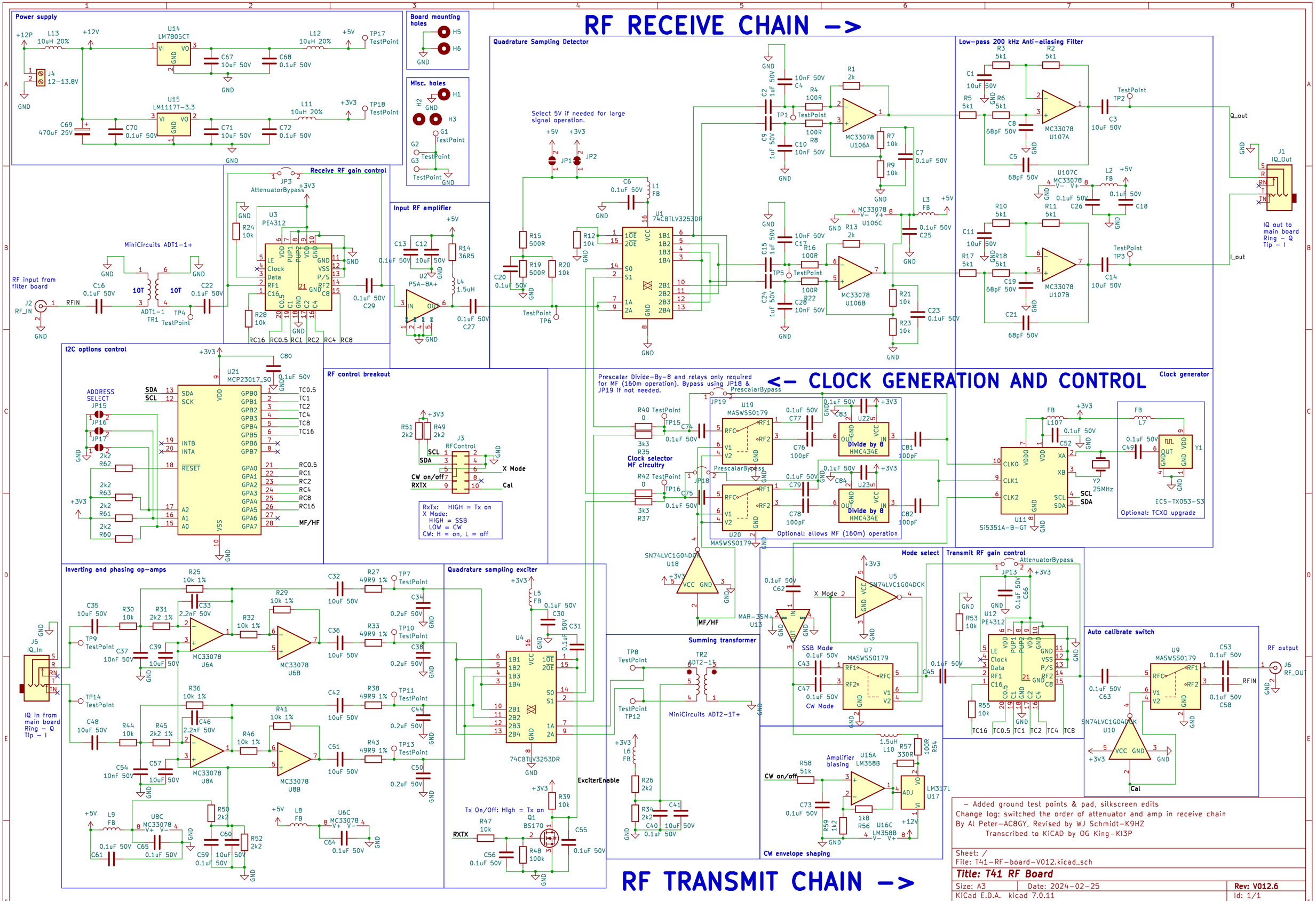

– Added ground test points & pad, silkscreen edits
Change log: switched the order of attenuator and amp in receive chain
By Al Peter–AC8GY, Revised by WJ Schmidt–K9HZ
Transcribed to KiCAD by OG King–KI3P

Sheet: /
File: T41–RF–board–V012.kicad_sch

Title: T41 RF Board

Size: A3	Date: 2024–02–25	Rev: V012.6
KiCad E.D.A. kicad 7.0.11		Id: 1/1