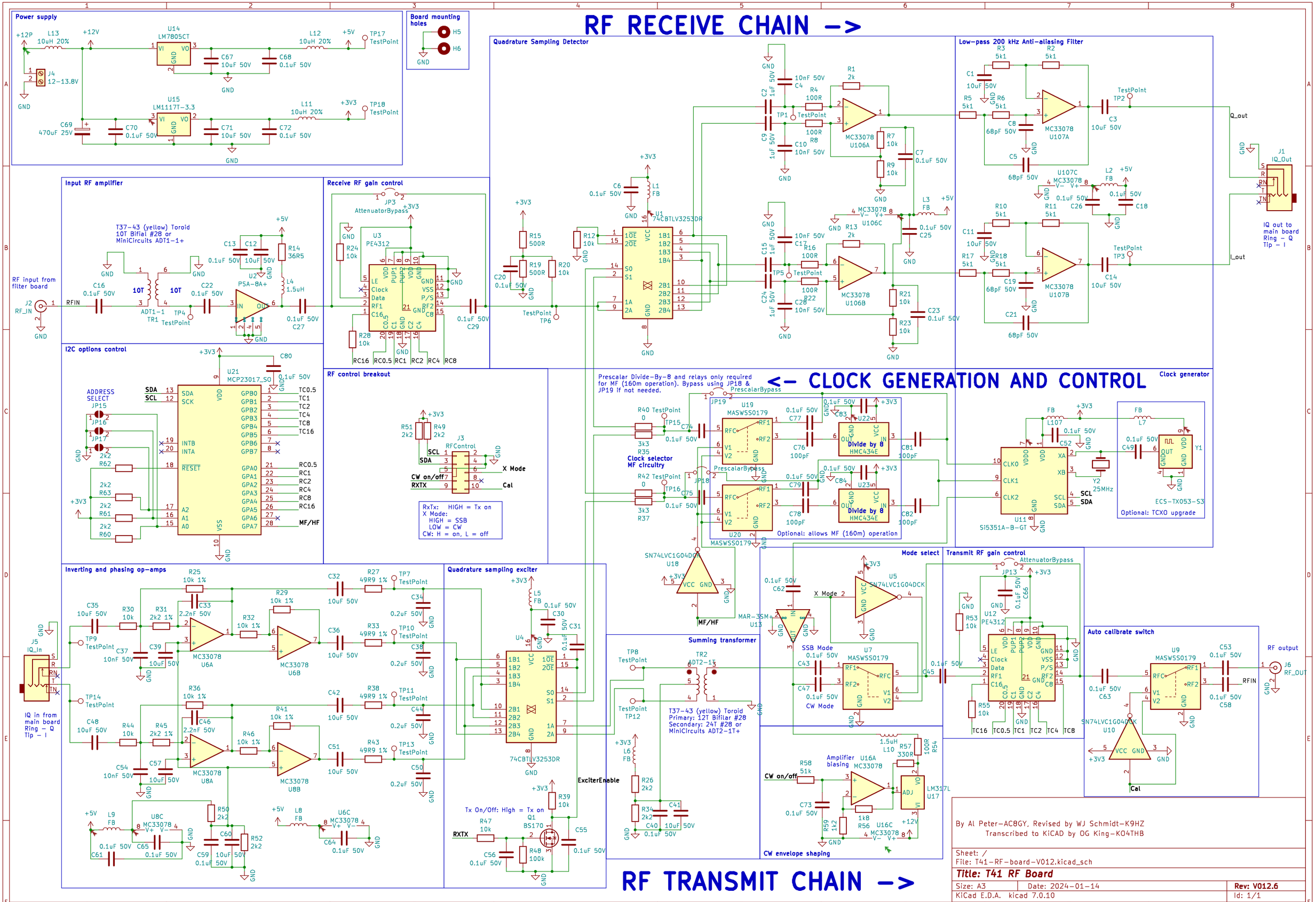
RF RECEIVE CHAIN ->
Power supply
Board mounting holes
Quadrature Sampling Detector
Low-pass 200 kHz Anti-aliasing Filter
Input RF amplifier
Receive RF gain control
I2C options control
RF control breakout
<- CLOCK GENERATION AND CONTROL
Clock generator
Inverting and phasing op-amps
Quadrature sampling exciter
Summing transformer
Mode select
Transmit RF gain control
Auto calibrate switch
CW envelope shaping
RF TRANSMIT CHAIN ->
By Al Peter-AC8GY, Revised by WJ Schmidt-K9HZ
Transcribed to KiCAD by OG King-KO4THB
Sheet: /
File: T41-RF-board-V012.kicad_sch
Title: T41 RF Board
Size: A3
Date: 2024-01-14
Rev: V012.6
KiCad E.D.A. kicad 7.0.10
Id: 1/1