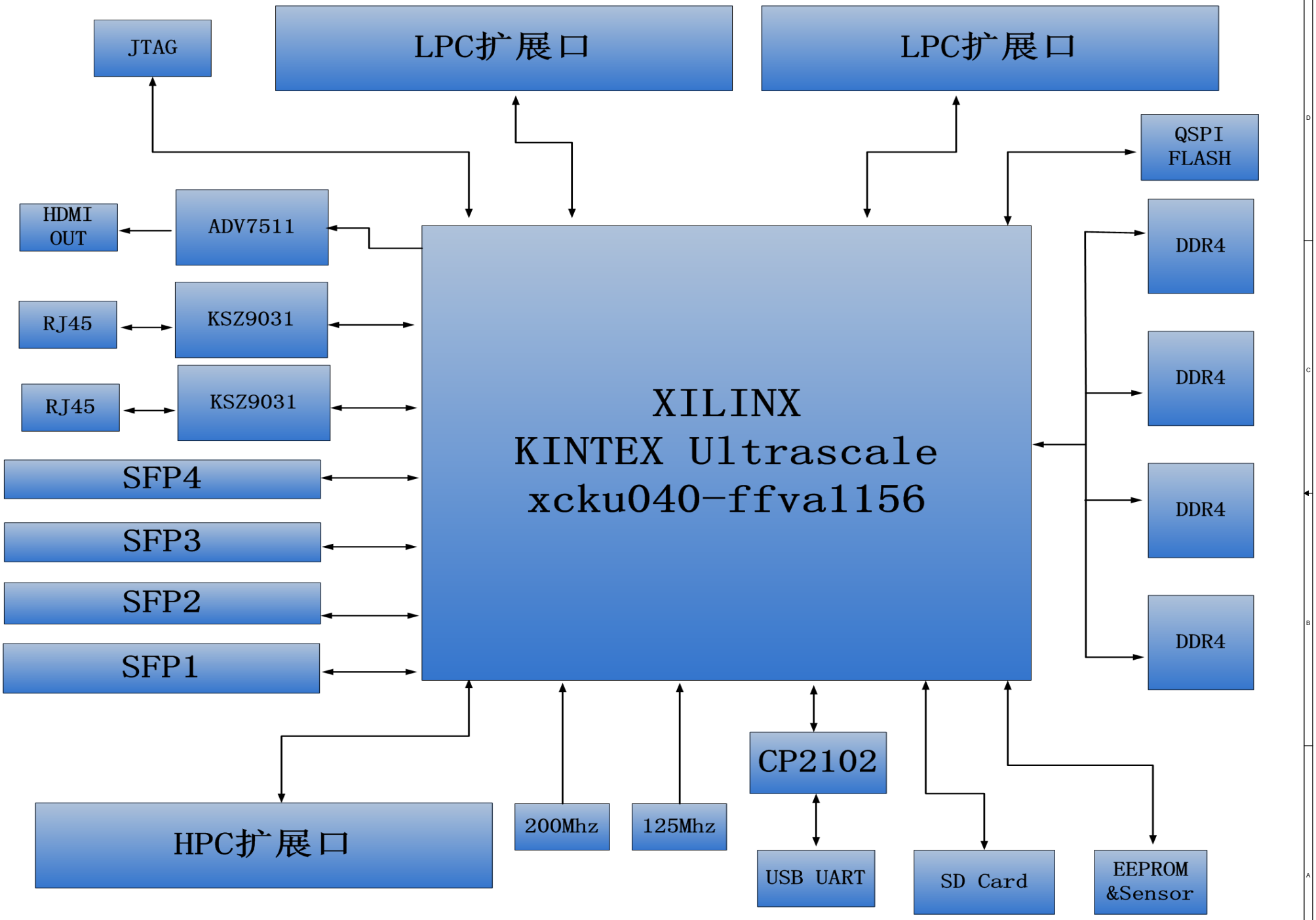

ALINX http://www.alinx.com

Title	PAGE01 BLOCK DIAGRAM
Size	Document Number: AXKU040开发板 Schematics — Rev: 1.0
Date:	Wednesday, August 11, 2021 — Sheet 1 of 32

ALINX Confidential

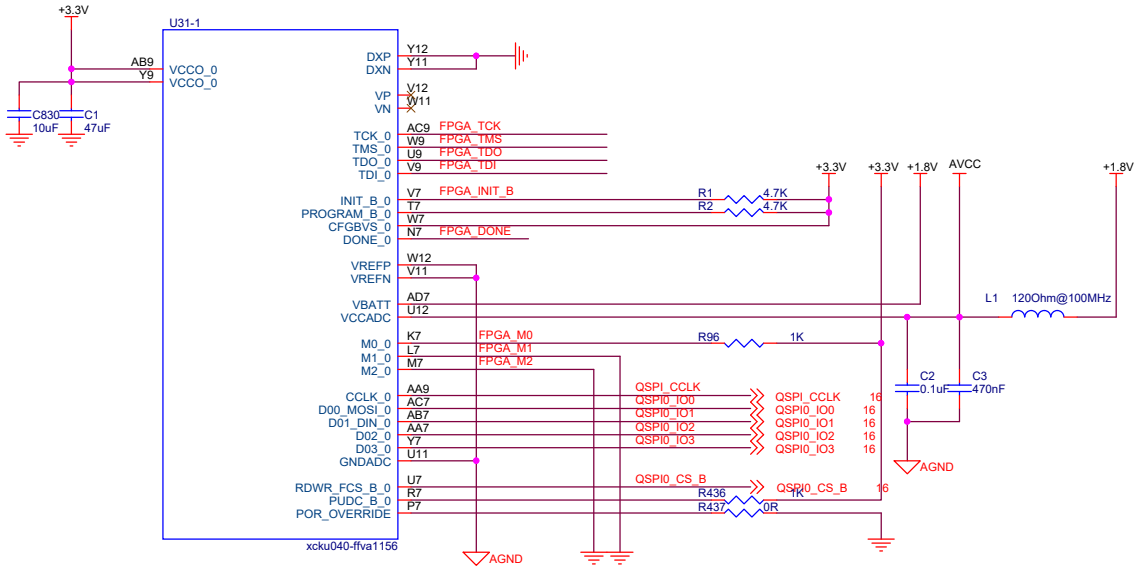

MASTER SPI M[2:0] = 001

JTAG Connector

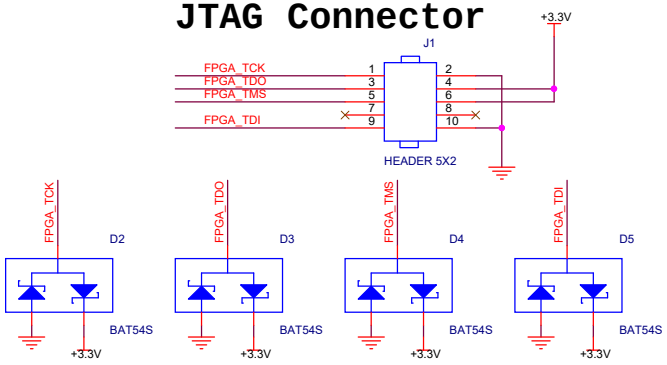

FPGA DONE LED

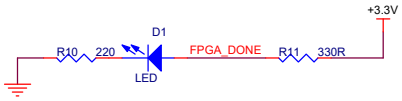

POWER LED

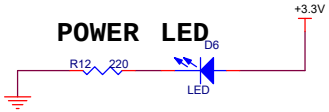

ALINX Confidential

ALINX	http://www.alinx.com
Title	PAGE02 FPGA BANK0
Size	Document Number: AXKU040开发板 Schematics — Rev: 1.0
Date:	Wednesday, August 11, 2021 — Sheet 2 of 32

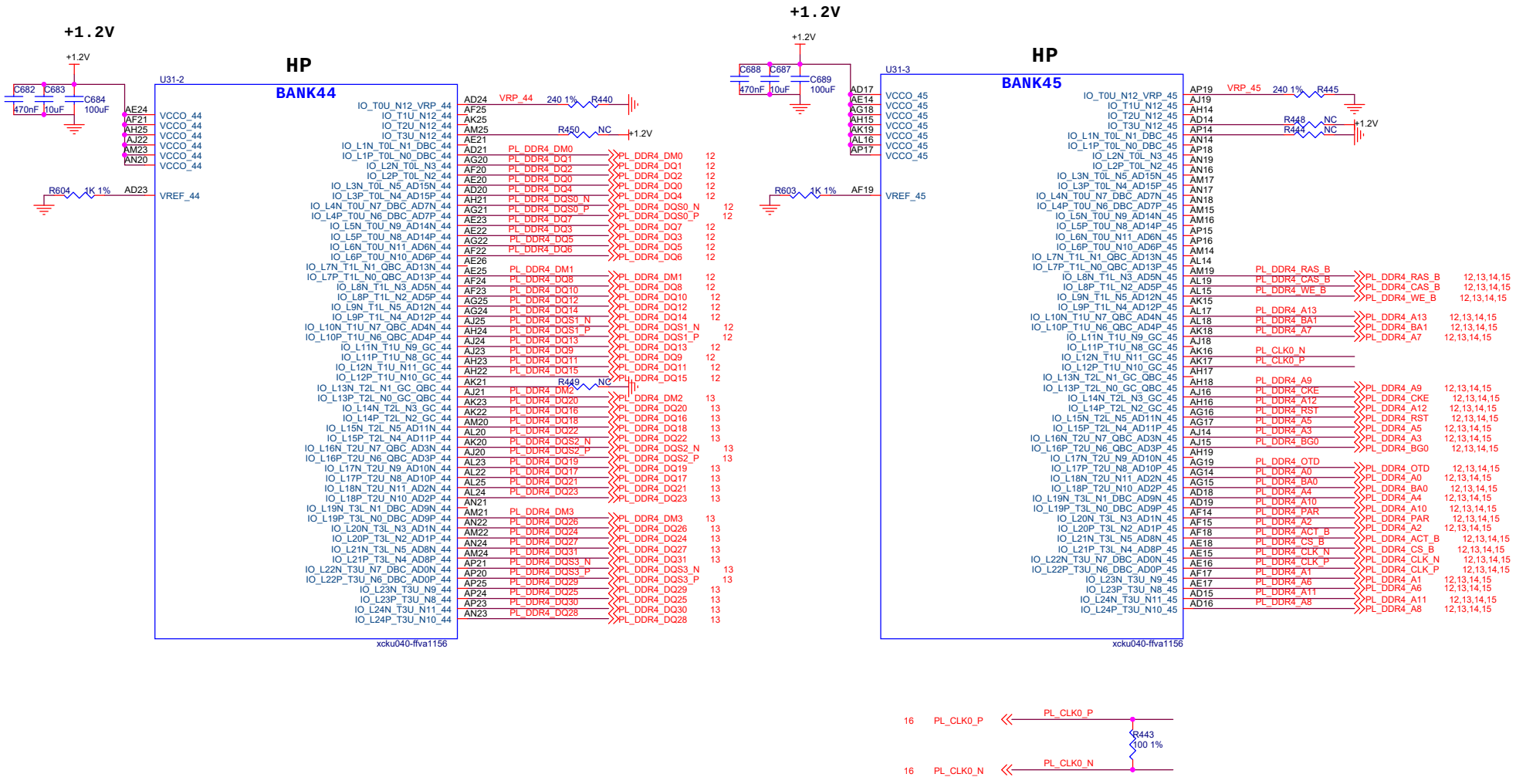

ALINX Confidential

ALINX	http://www.alinx.com	
Title	PAGE03 FPGA BANK12/13	
Size	Document Number: AXKU040开发板 Schematics	Rev: 1.0
Date: Wednesday, August 11, 2021	Sheet 3 of 32	

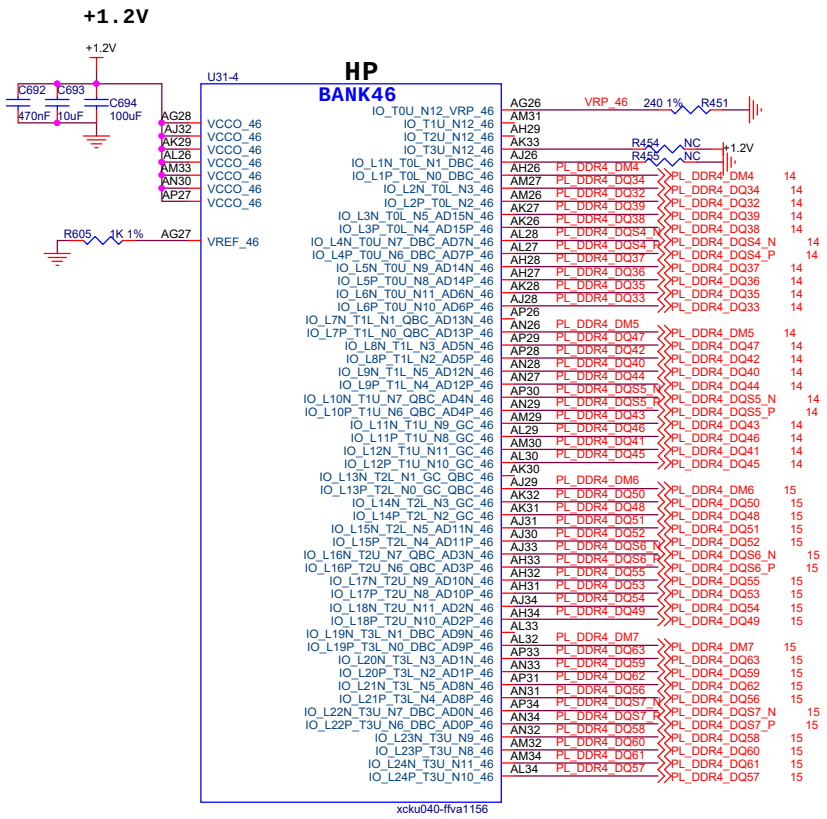

ALINX Confidential

ALINX http://www.alinx.com

Title: PAGE04 FPGA BANK14/15

Size | Document Number: AXKU040开发板 Schematics | Rev: 1.0

Date: Wednesday, August 11, 2021 | Sheet 4 of 32

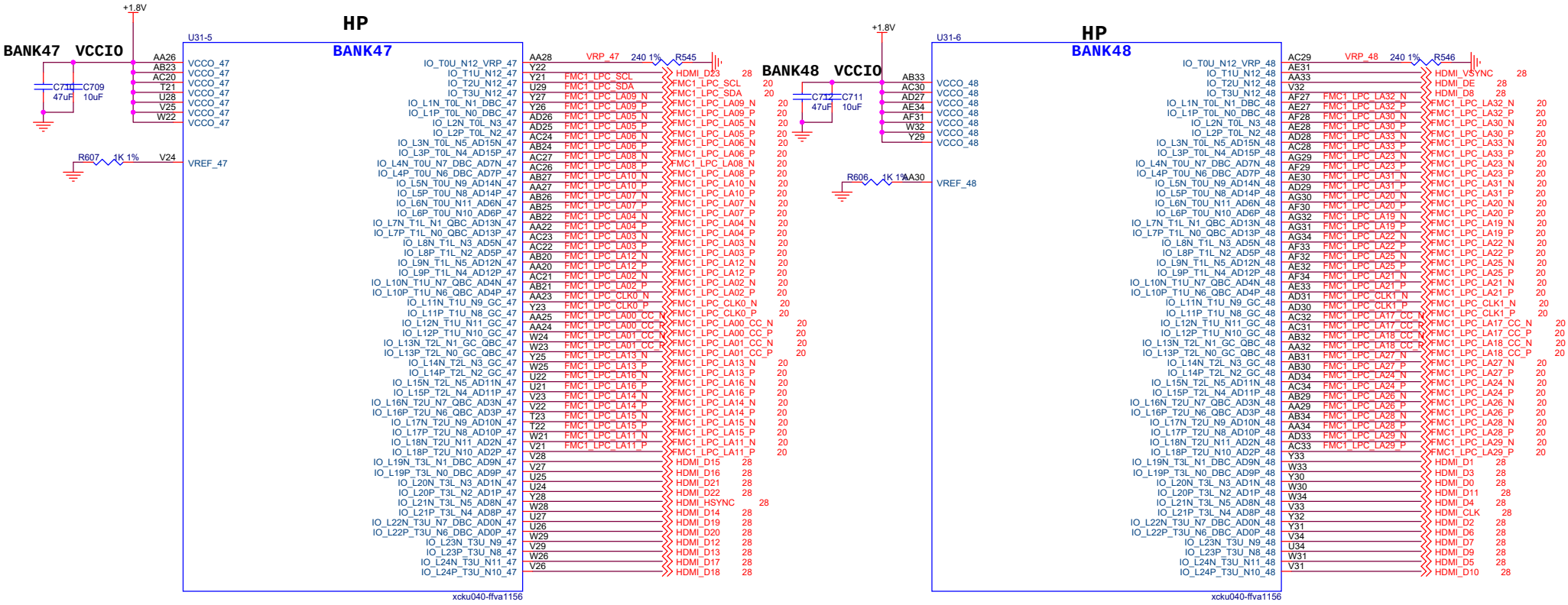

ALINX Confidential

ALINX http://www.alinx.com

Title: PAGE05 FPGA BANK16/17

Size | Document Number: AXKU040开发板 Schematics | Rev: 1.0

Date: Wednesday, August 11, 2021 | Sheet 5 of 32

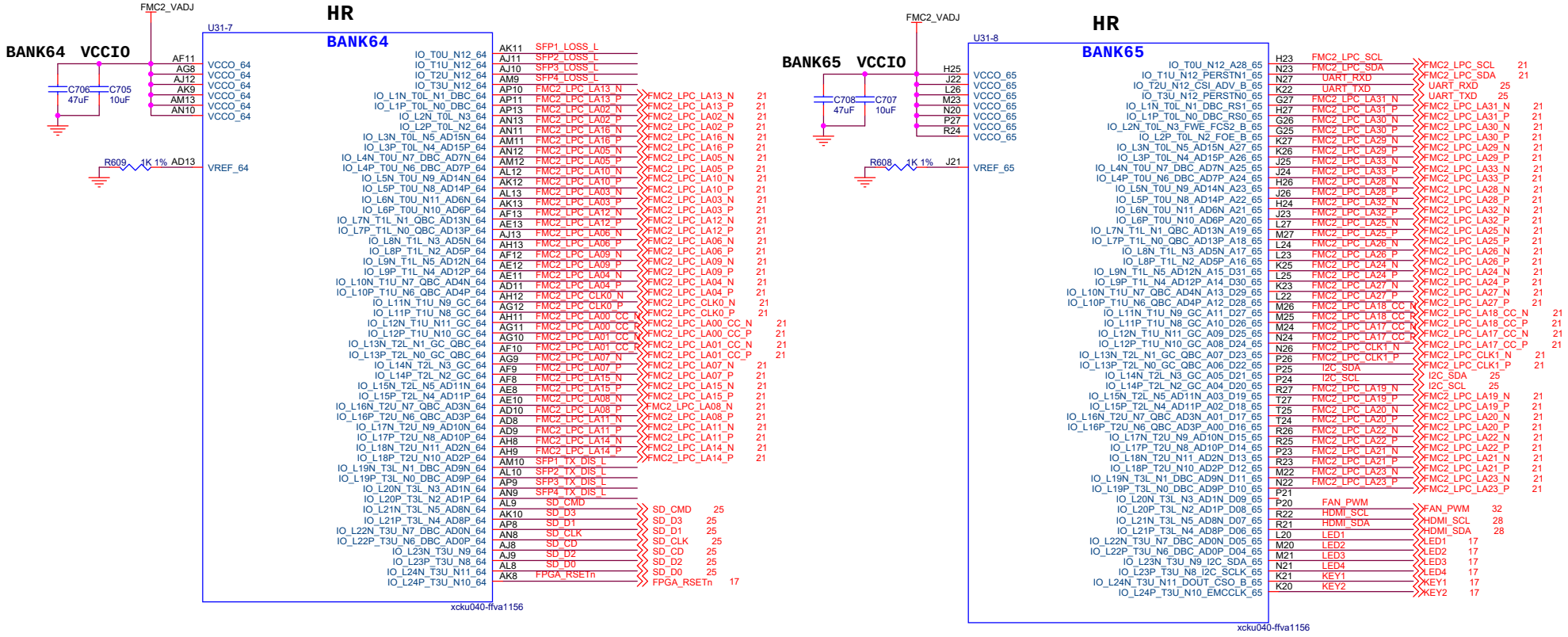

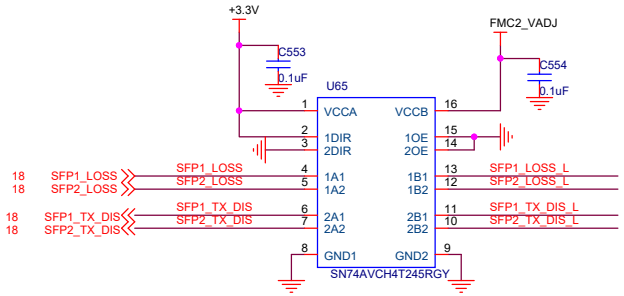

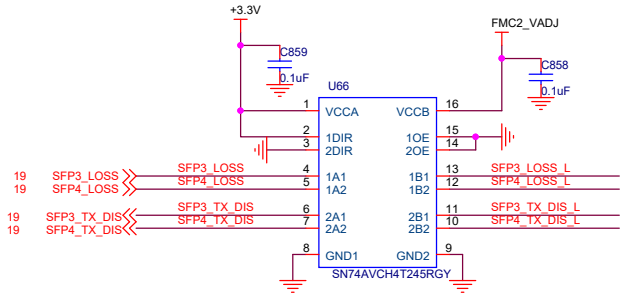

ALINX Confidential

ALINX http://www.alinx.com

Title	PAGE06 FPGA BANK18
Size	Document Number: AXKU040开发板 Schematics
Rev	1.0
Date:	Wednesday, August 11, 2021
Sheet	6 of 32

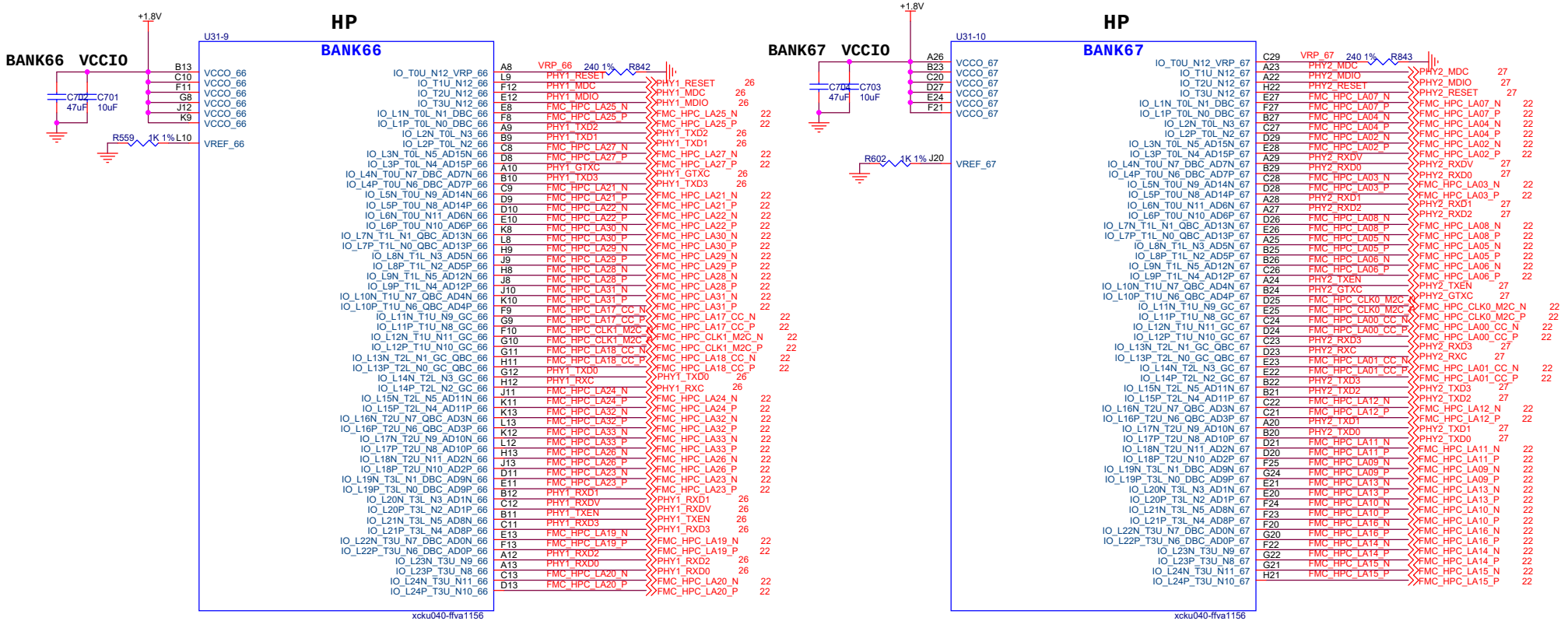

ALINX Confidential

ALINX	http://www.alinx.com
Title	PAGE07 FPGA BANK32/33
Size	Document Number: AXKU040开发板 Schematics
Rev	1.0
Date:	Wednesday, August 11, 2021
Sheet	7 of 32

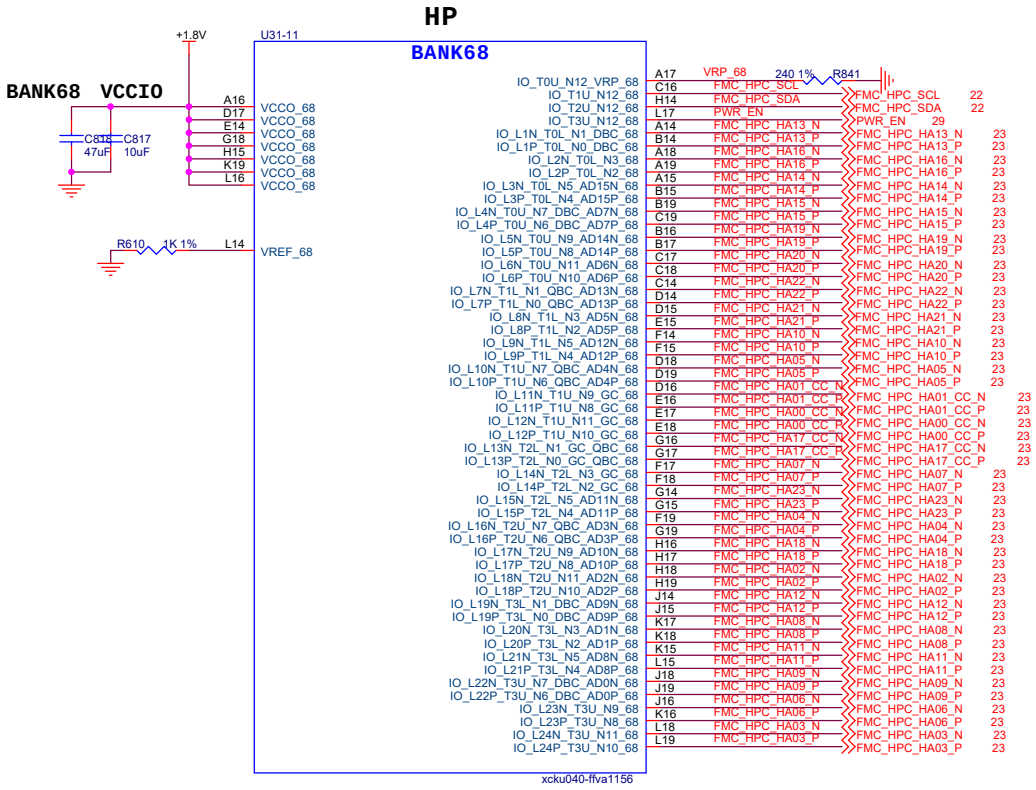

ALINX Confidential

ALINX http://www.alinx.com

Title: PAGE08 FPGA BANK34

Size | Document Number: AXKU040开发板 Schematics | Rev: 1.0

Date: Wednesday, August 11, 2021 | Sheet 8 of 32

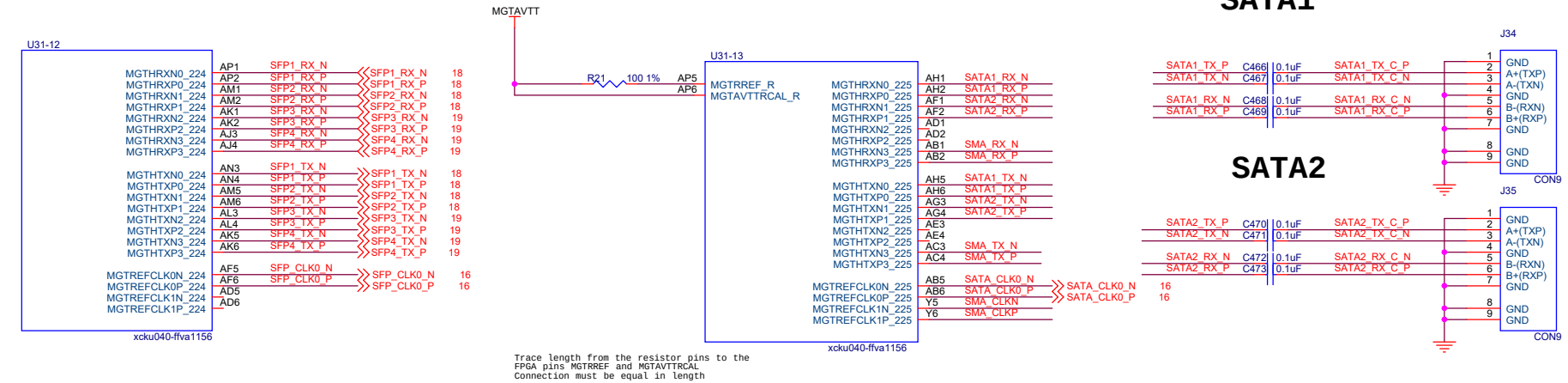

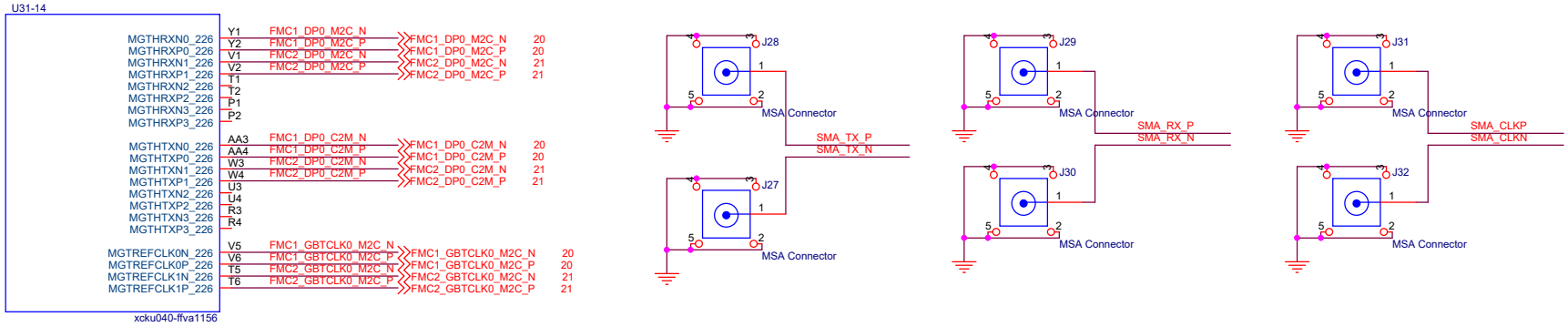

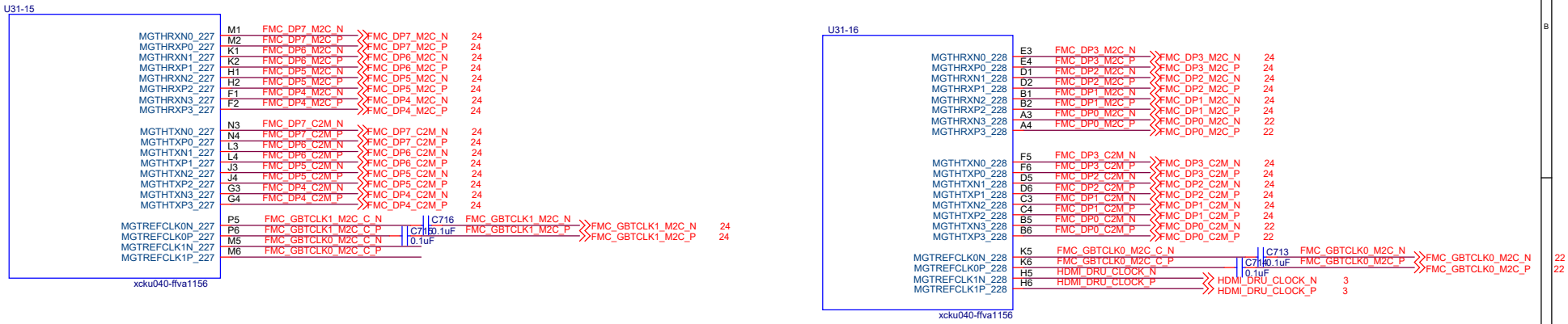

ALINX Confidential

ALINX http://www.alinx.com		
Title: PAGE09 FPGA BAN115/116/117/118		
Size	Document Number: AXKU040开发板 Schematics	Rev: 1.0
Date: Wednesday, August 11, 2021	Sheet 9 of 32	

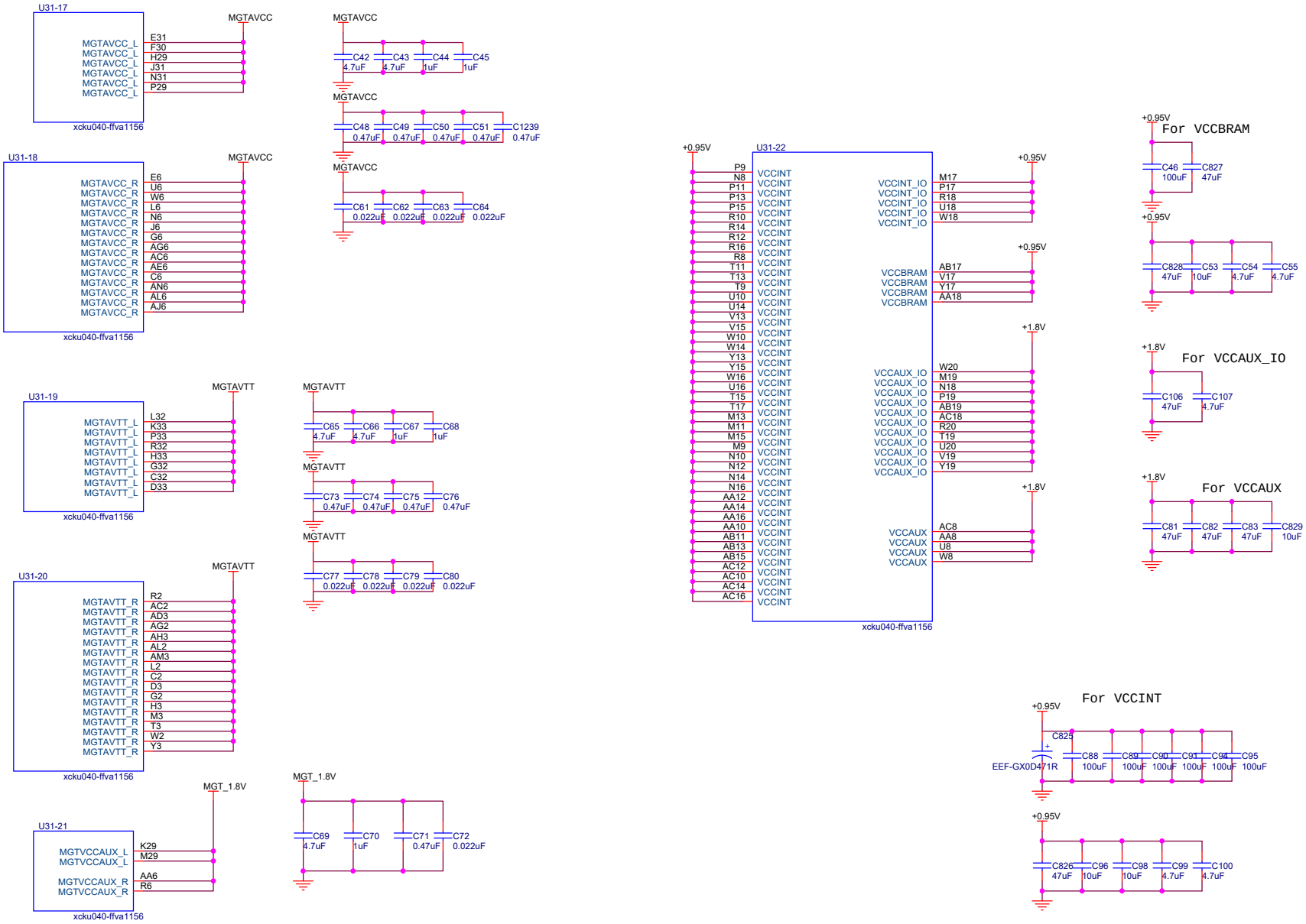

ALINX Confidential

ALINX http://www.alinx.com		
Title: PAGE10 FPGA Power		
Size	Document Number: AXKU040开发板 Schematics	Rev: 1.0
Date: Wednesday, August 11, 2021	Sheet 10 of 32	

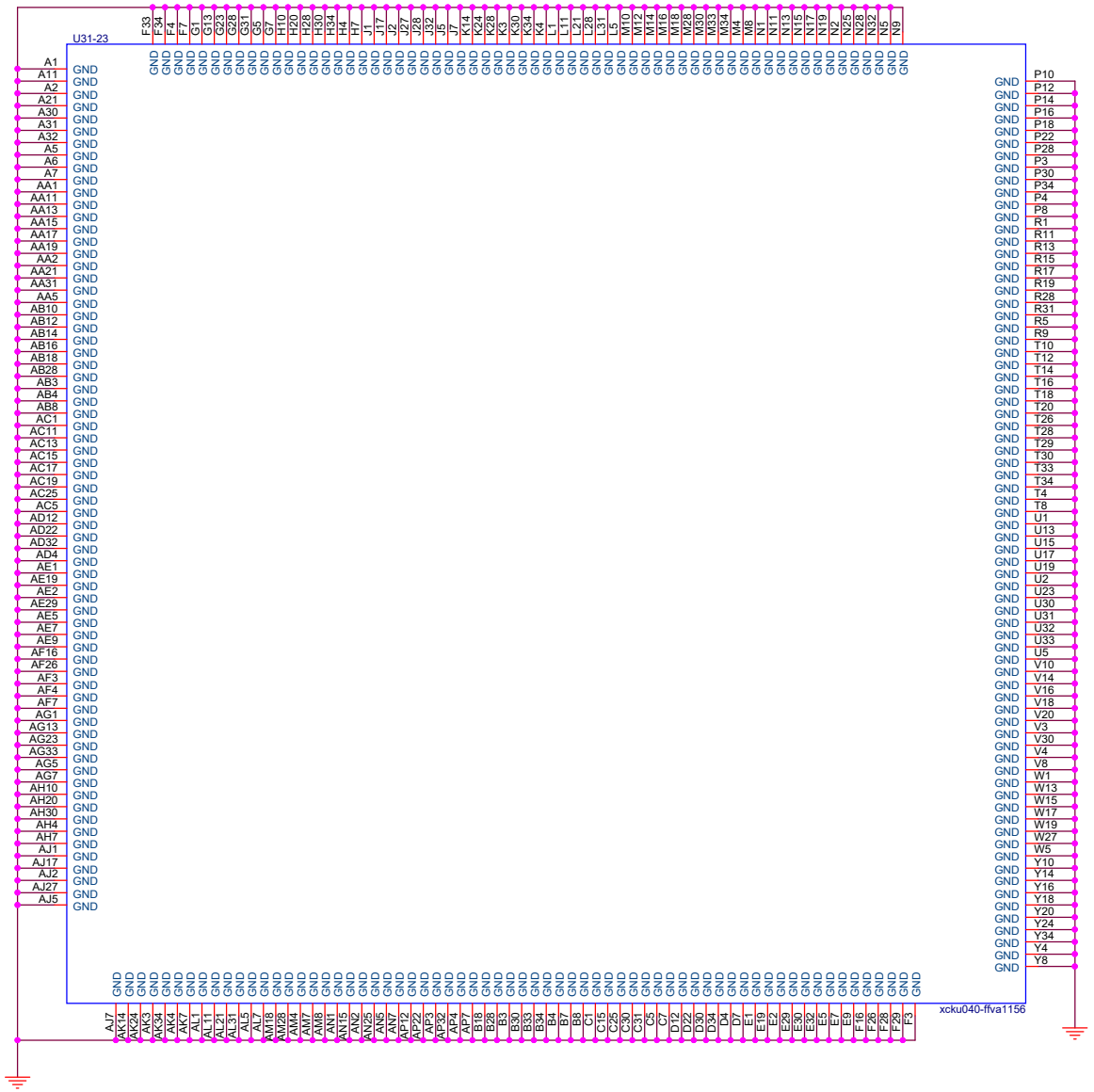

ALINX Confidential

ALINX http://www.alinx.com

Title	PAGE11 FPGA GND	
Size	Document Number: AXKU040开发板 Schematics	Rev: 1.0
Date: Wednesday, August 11, 2021	Sheet 11 of 32	

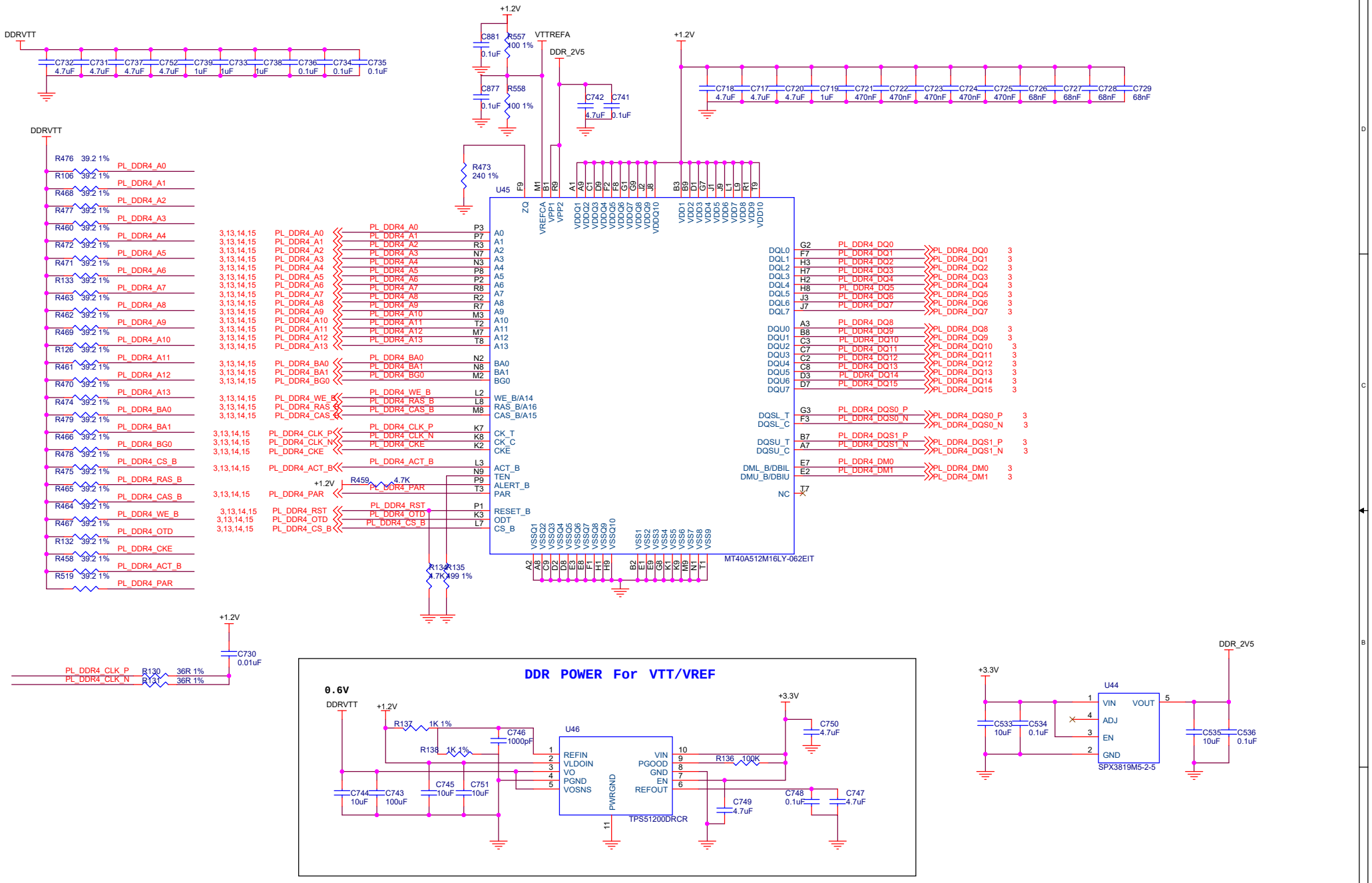

ALINX Confidential

ALINX	http://www.alinx.com
Title	PAGE12 DDR3_1
Size	Document Number: AXKU040开发板 Schematics
Rev	1.0
Date:	Wednesday, August 11, 2021
Sheet	12 of 32

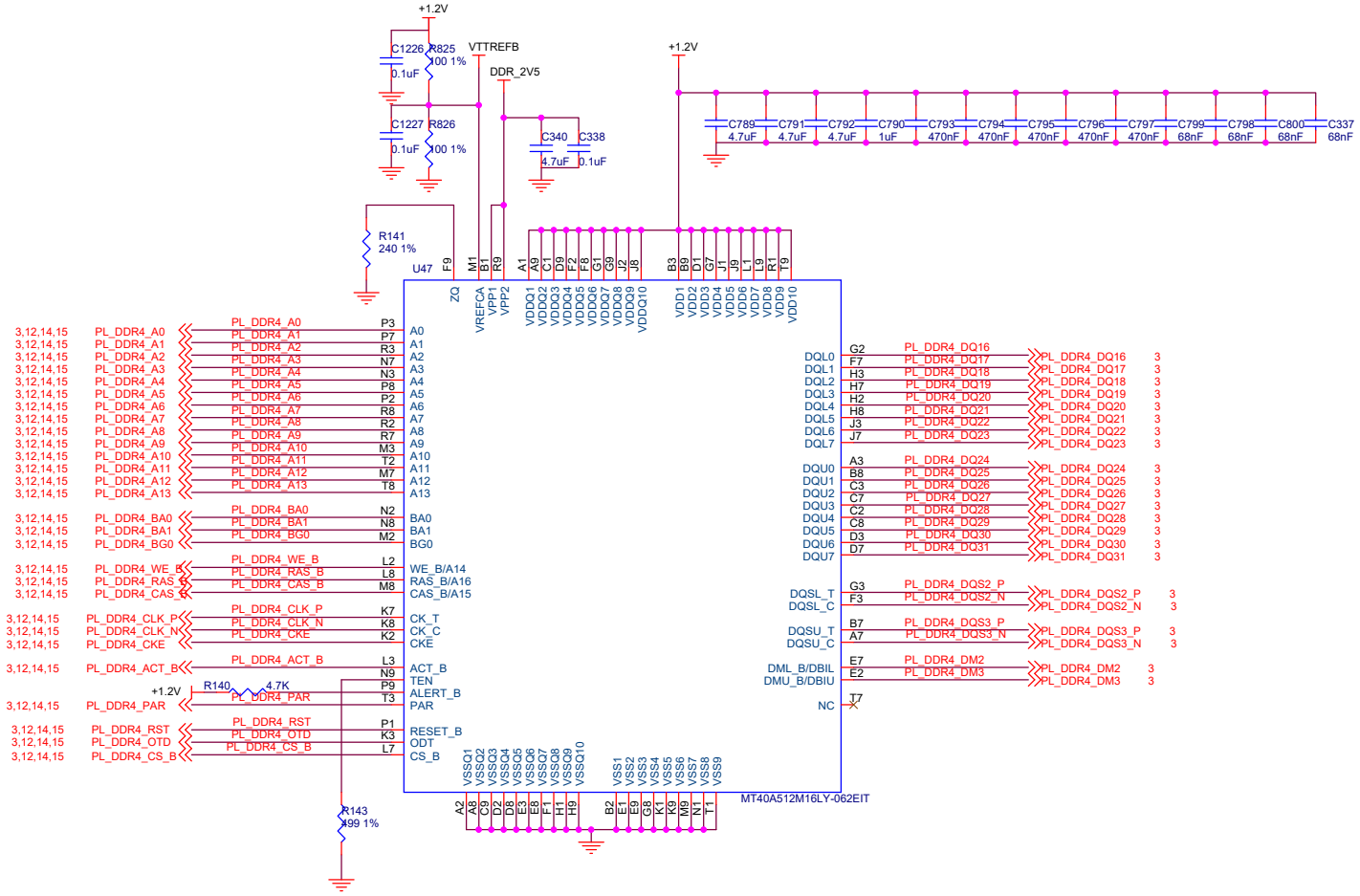

ALINX Confidential

ALINX	http://www.alinx.com
Title	PAGE13 DDR3_2
Size	Document Number: AXKU040开发板 Schematics
Rev	1.0
Date:	Wednesday, August 11, 2021
Sheet	13 of 32

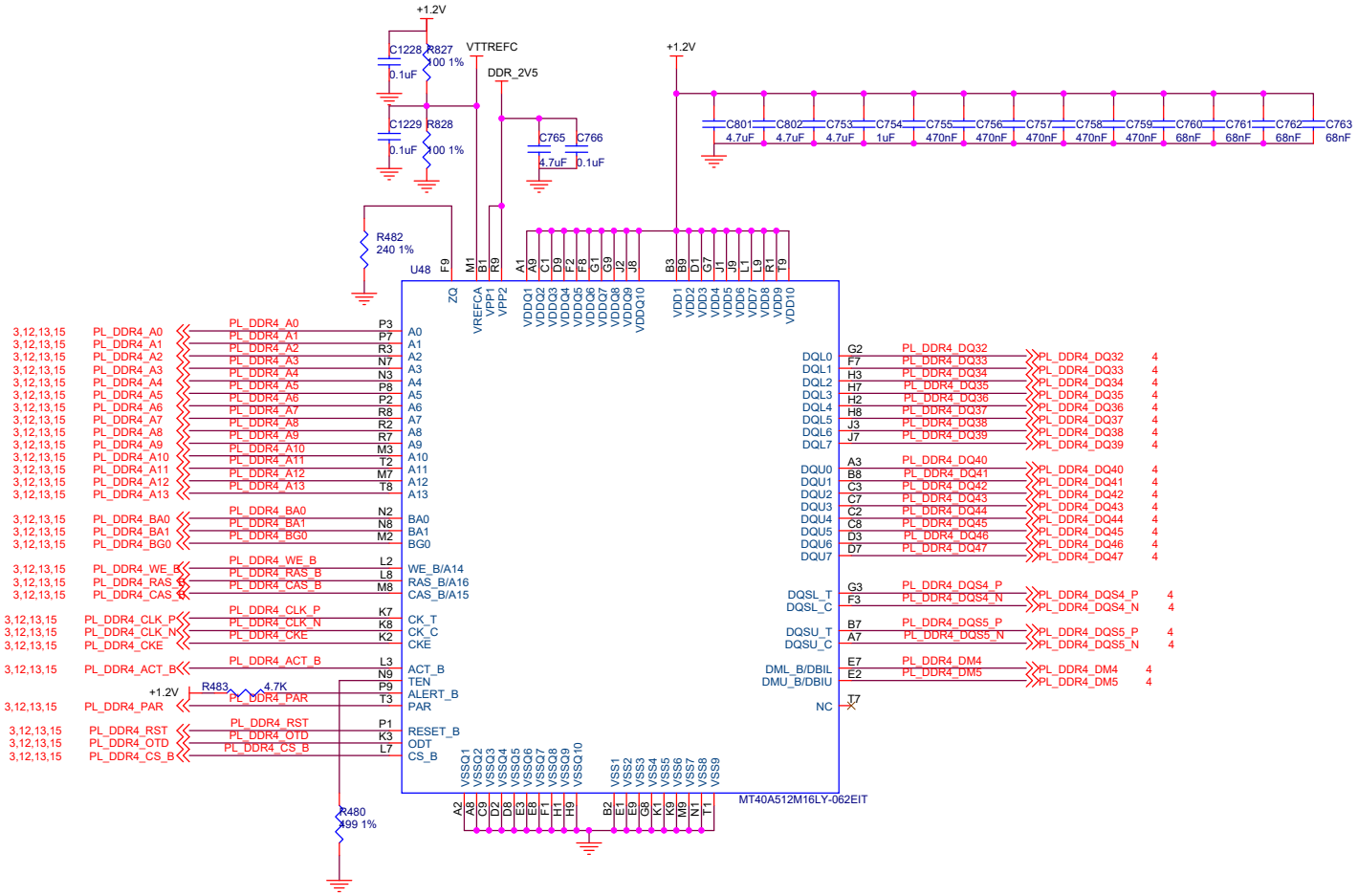

ALINX Confidential

ALINX http://www.alinx.com

Title	PAGE14 DIMM	
Size	Document Number: AXKU040开发板 Schematics	Rev: 1.0
Date: Wednesday, August 11, 2021	Sheet 14 of 32	

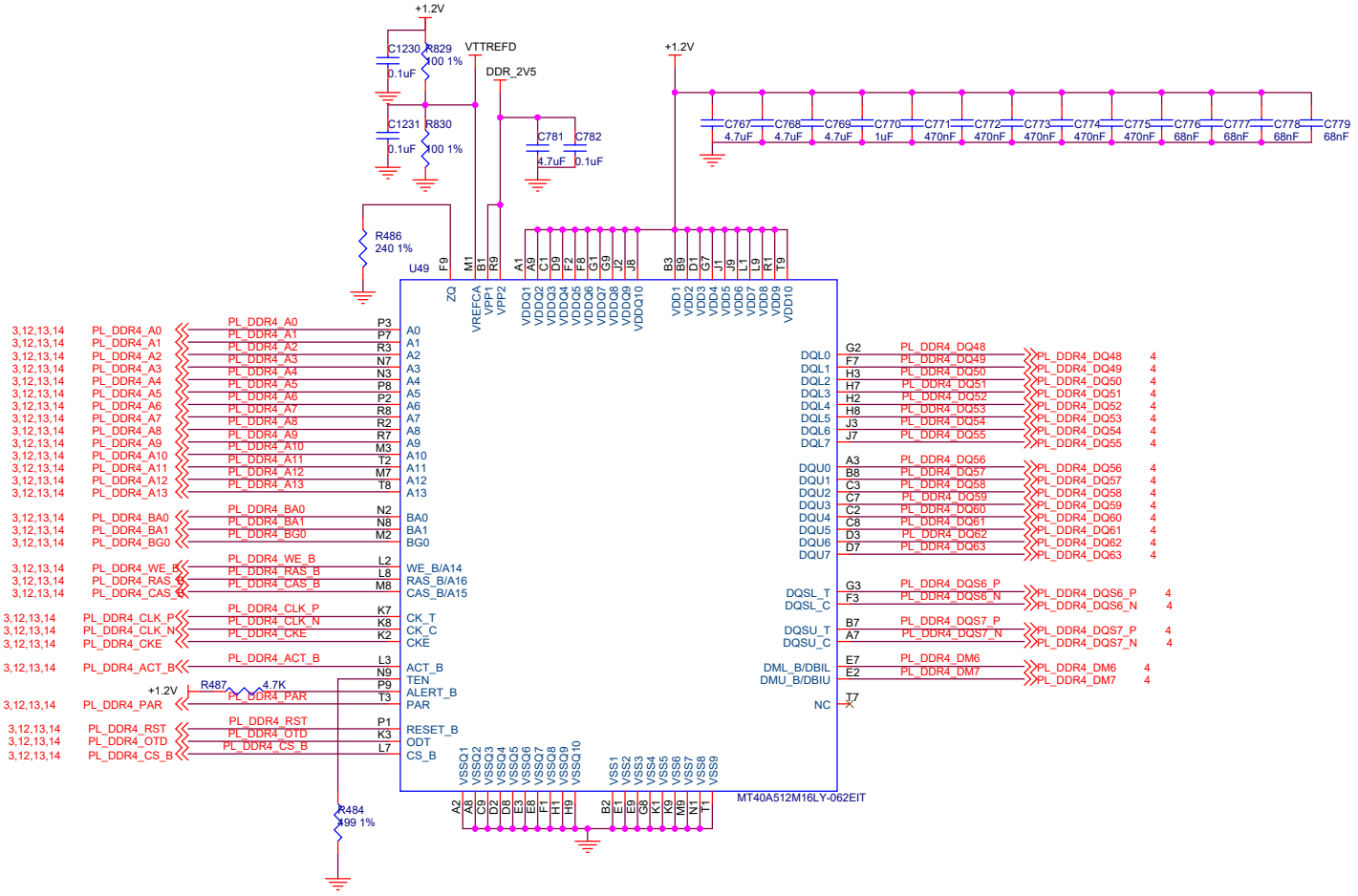

ALINX Confidential

ALINX http://www.alinx.com

Title: PAGE15 FLASH

Size | Document Number: AXKU040开发板 Schematics | Rev: 1.0

Date: Wednesday, August 11, 2021 | Sheet 15 of 32

SYSTEM CLOCK

200MHz

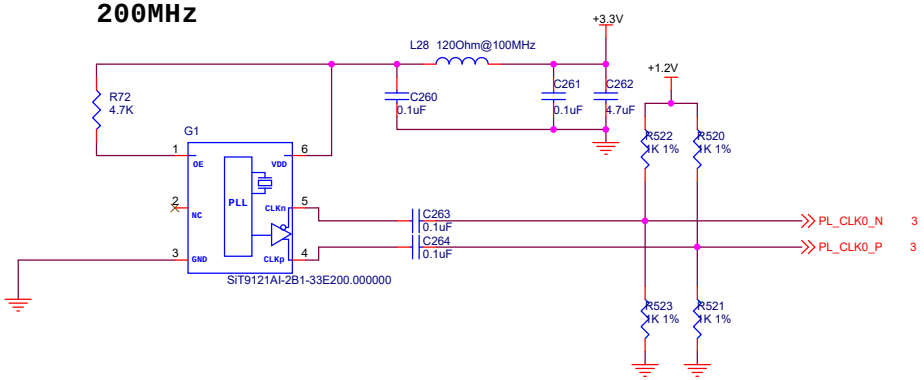

SFP CLOCK

125MHz

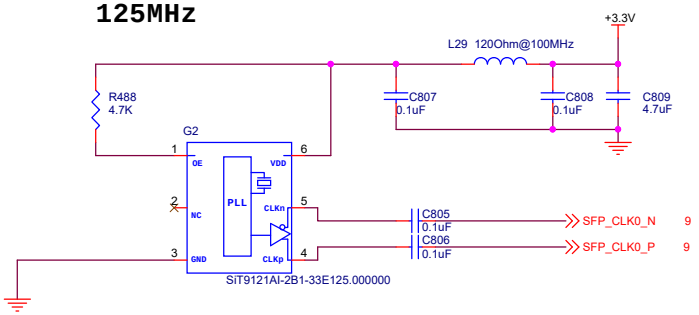

DRU CLOCK

156.25MHz

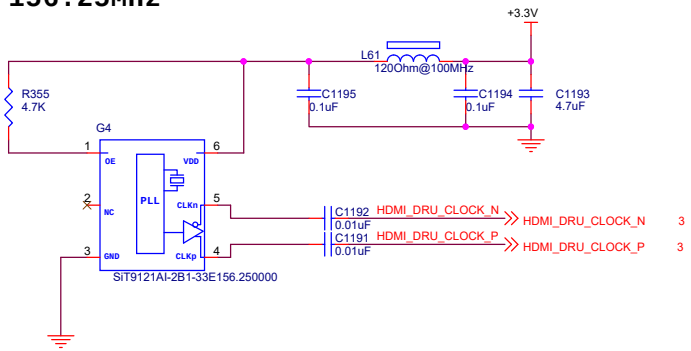

SATA CLOCK

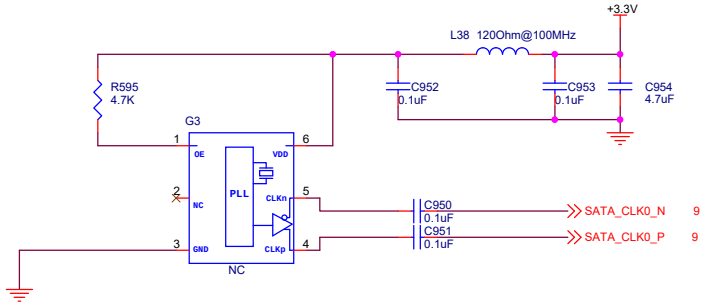

FPGA CONFIG SPI

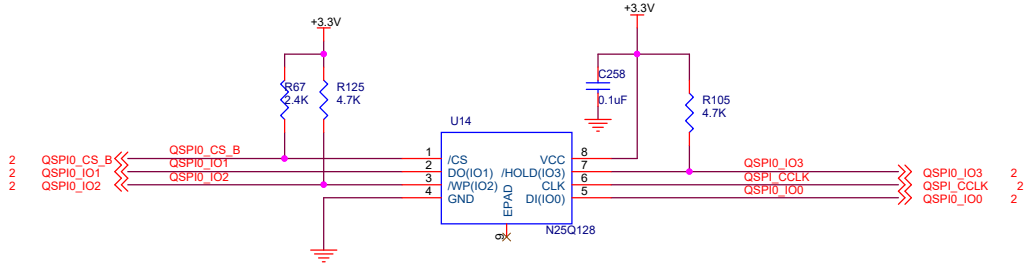

ALINX Confidential

ALINX http://www.alinx.com

Title	PAGE16 CLOCK	
Size	Document Number: AXKU040开发板 Schematics	Rev: 1.0
Date: Wednesday, August 11, 2021	Sheet 16 of 32	

USER LED

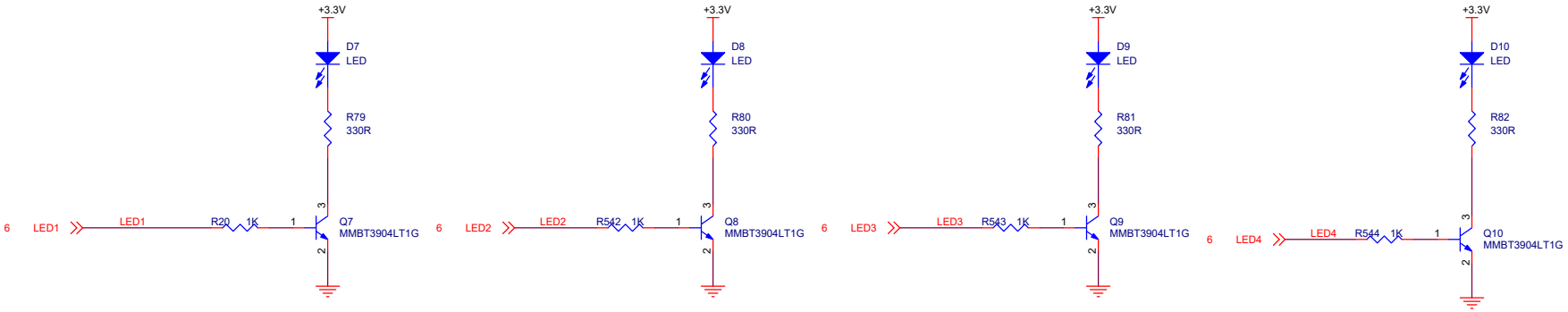

USER KEY

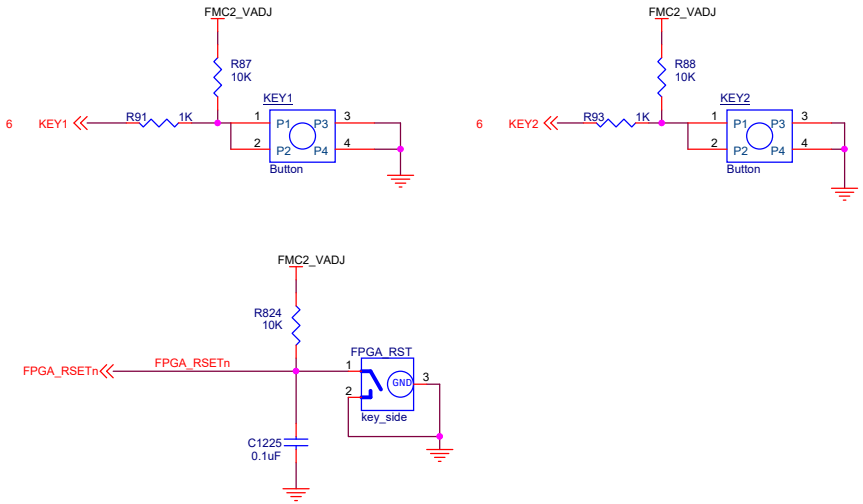

ALINX Confidential

ALINX http://www.alinx.com

Title	PAGE17 KEY & LED
Size	Document Number: AXKU040开发板 Schematics — Rev: 1.0
Date:	Wednesday, August 11, 2021 — Sheet 17 of 32

SFP 1

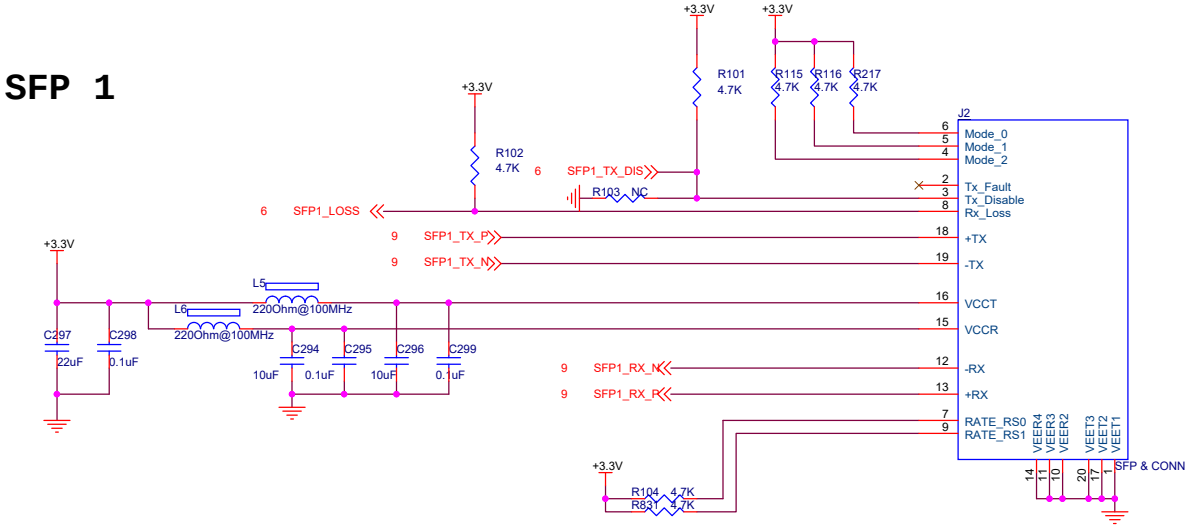

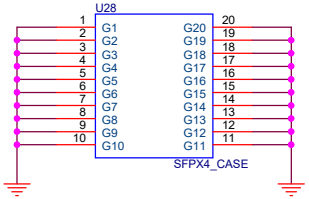

SFP 2

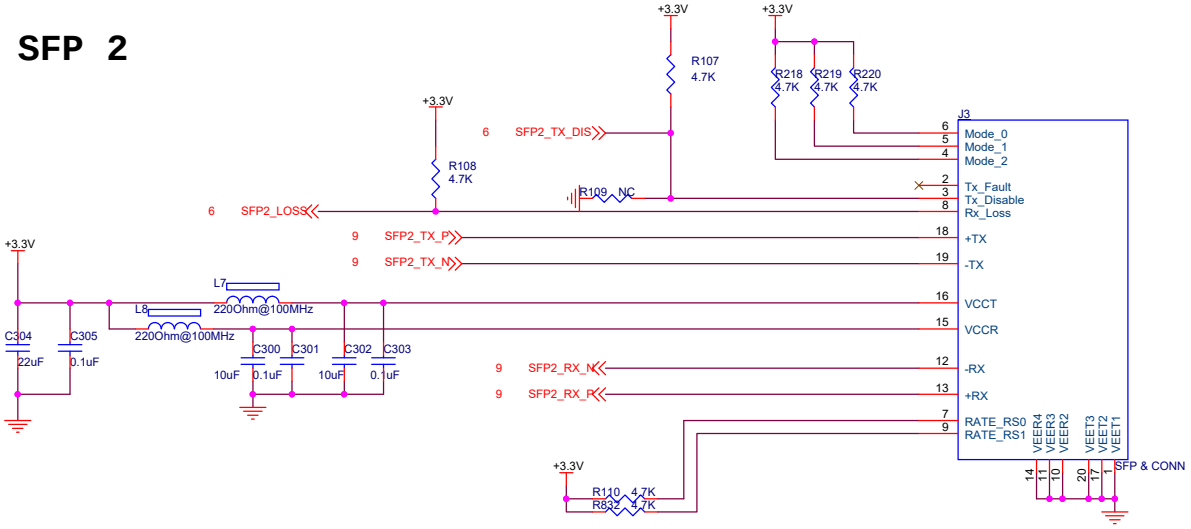

ALINX Confidential

ALINX http://www.alinx.com

Title	PAGE18 SFP1&SPF2	
Size	Document Number: AXKU040开发板 Schematics	Rev: 1.0
Date: Wednesday, August 11, 2021	Sheet 18 of 32	

SFP 3

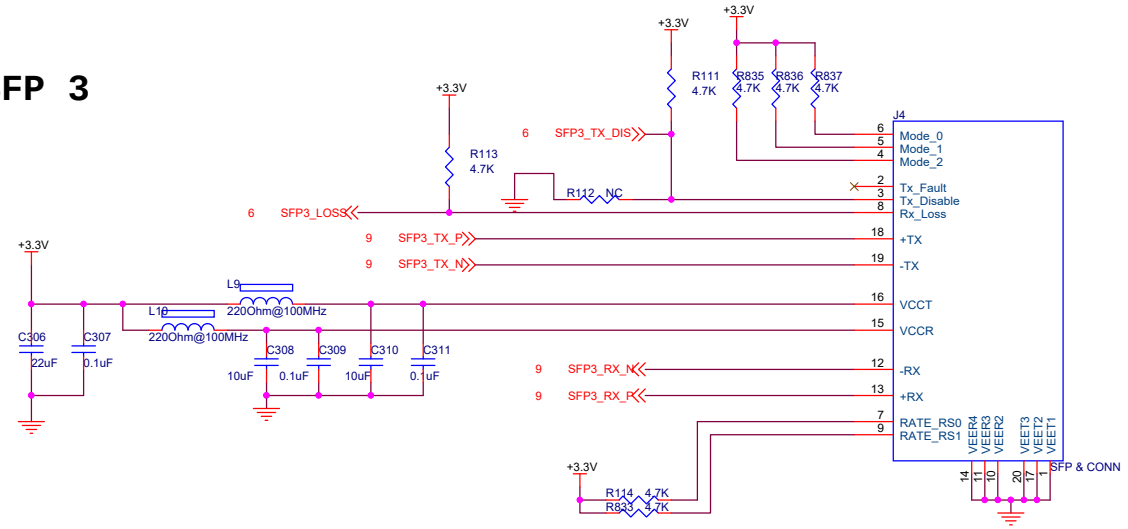

SFP 4

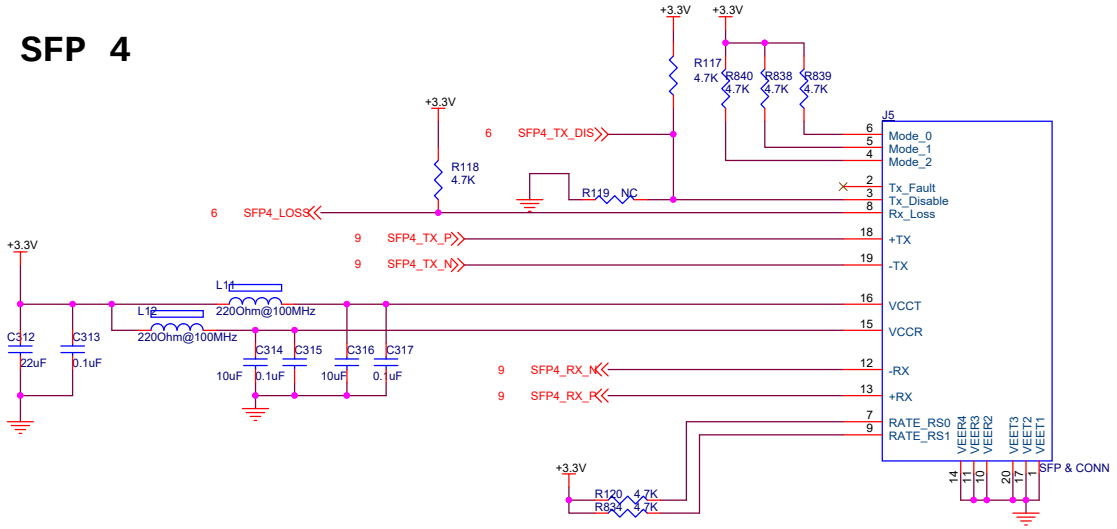

ALINX Confidential

ALINX http://www.alinx.com

Title: PAGE19 SFP3&SPF4

Size | Document Number: AXKU040开发板 Schematics | Rev: 1.0

Date: Wednesday, August 11, 2021 | Sheet 19 of 32

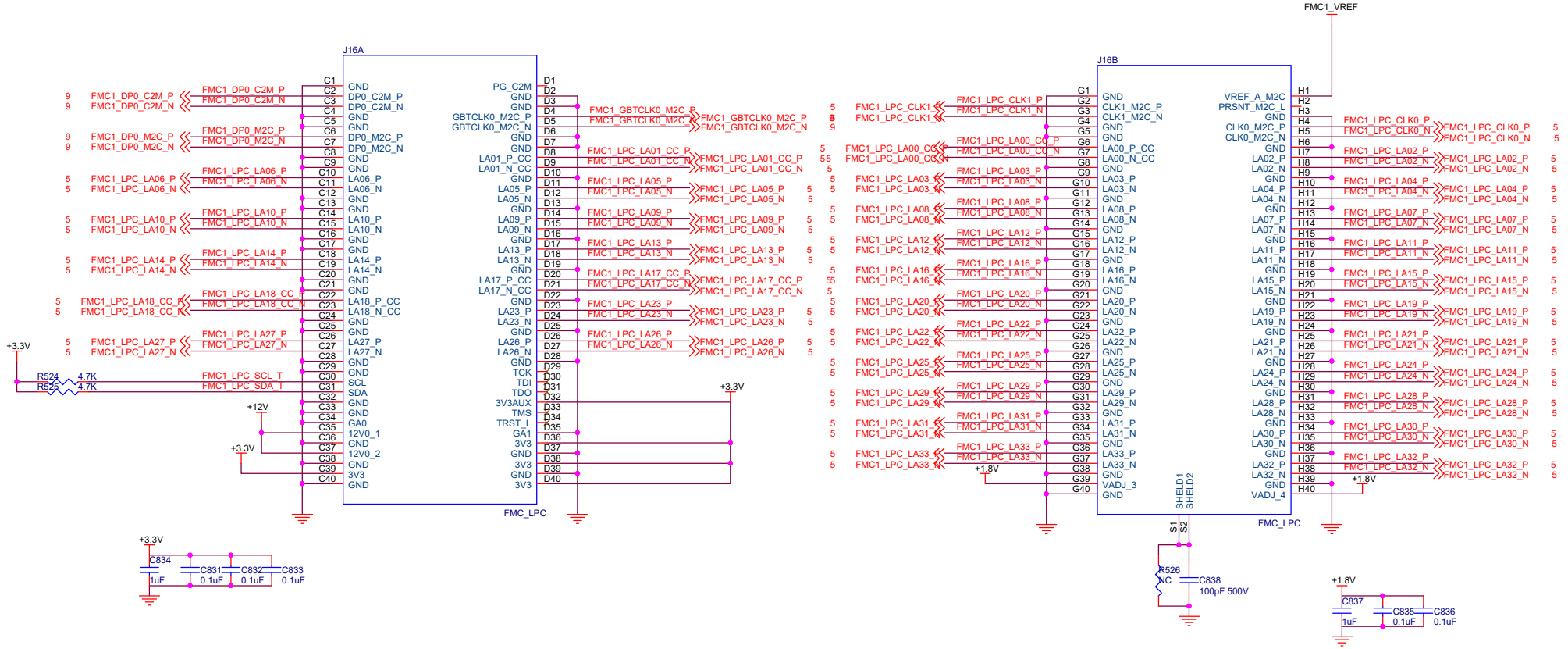

ALINX Confidential

ALINX	http://www.alinx.com	
Title	PAGE20 FMC_LPC1	
Size	Document Number: AXKU040开发板 Schematics	Rev: 1.0
Date: Wednesday, August 11, 2021	Sheet 20 of 32	

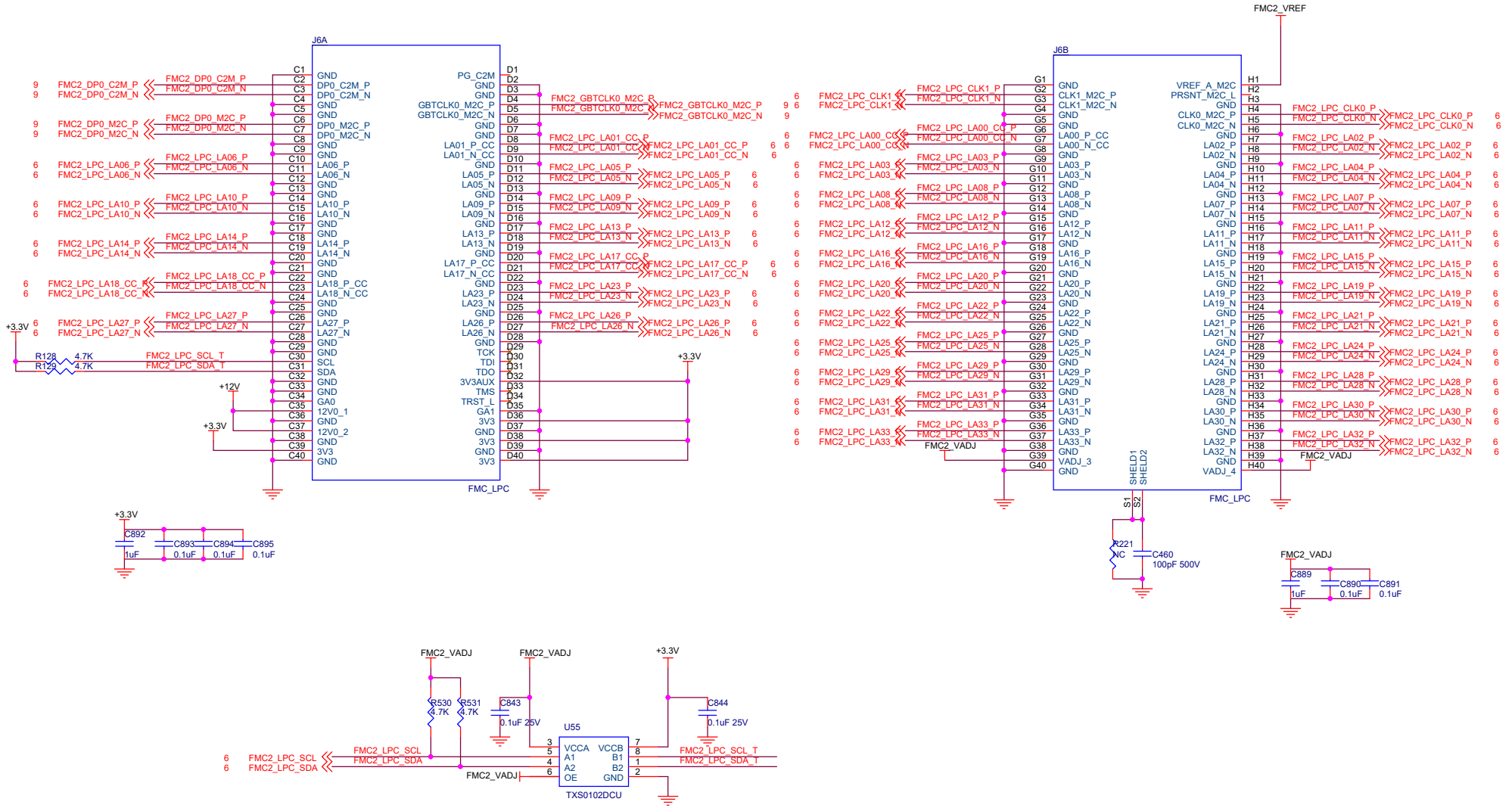

ALINX Confidential

ALINX	http://www.alinx.com
Title	PAGE21 FMC_LPC2
Size	Document Number: AXKU040开发板 Schematics
Rev	1.0
Date:	Wednesday, August 11, 2021
Sheet	21 of 32

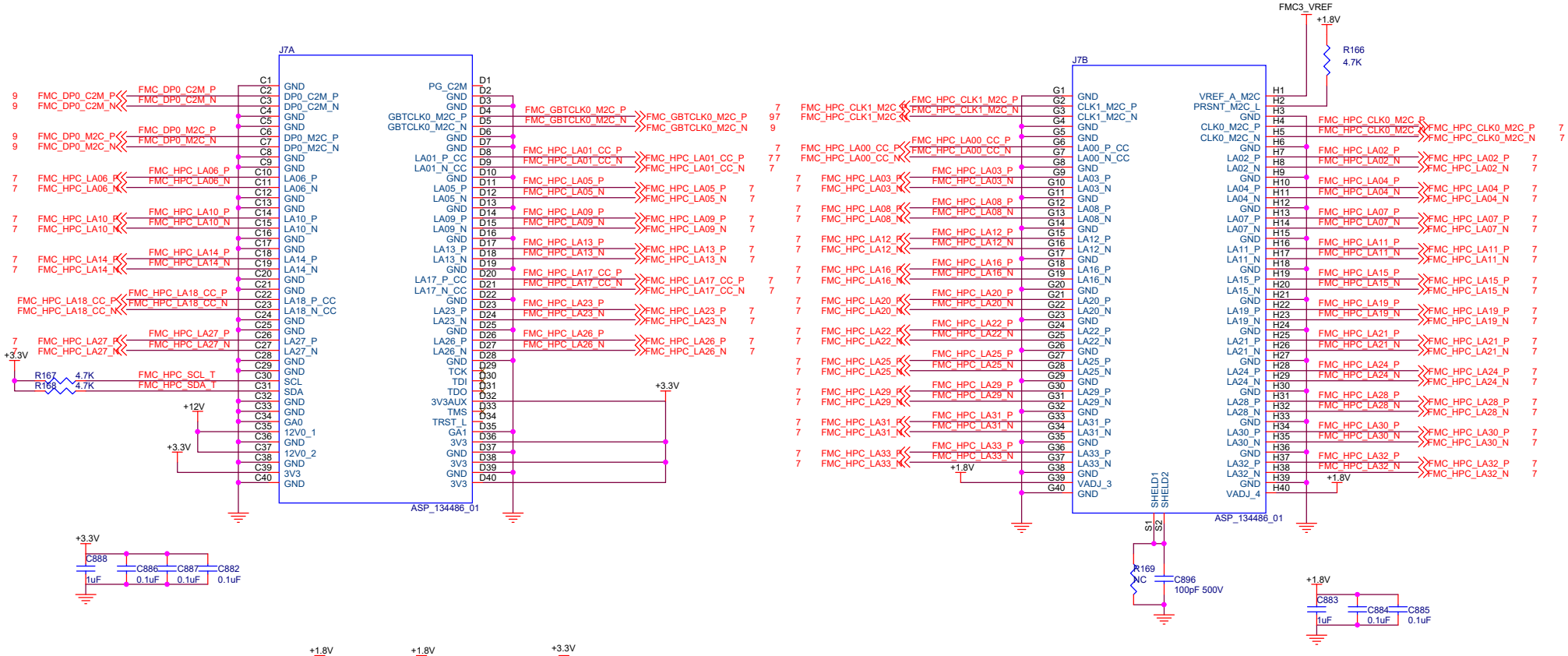

ALINX Confidential

ALINX www.alinx.com

Title	PAGE22 FMC_HPC_1	
Size	Document Number: AXKU040开发板 Schematics	Rev: 1.0
Date: Wednesday, August 11, 2021	Sheet 22 of 32	

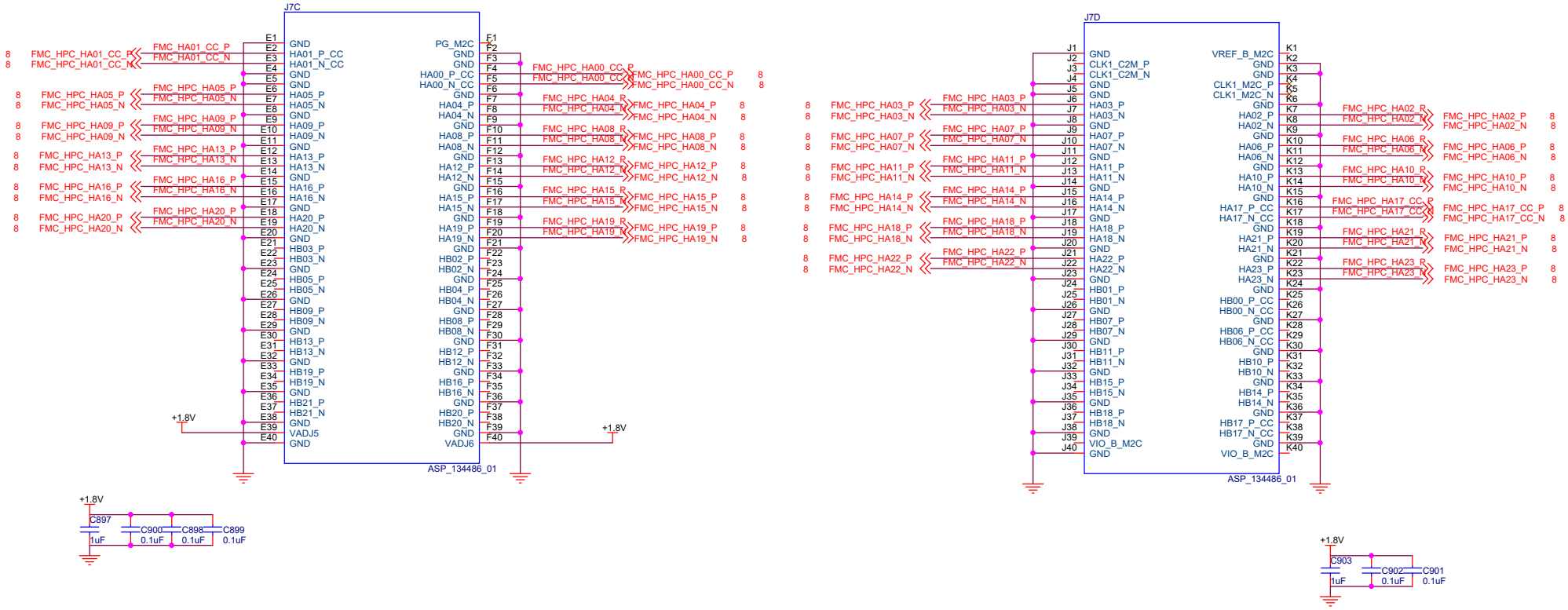

ALINX Confidential

ALINX www.alinx.com

Title: PAGE23 FMC_HPC_2

Size | Document Number: AXKU040开发板 Schematics | Rev: 1.0

Date: Wednesday, August 11, 2021 | Sheet 23 of 32

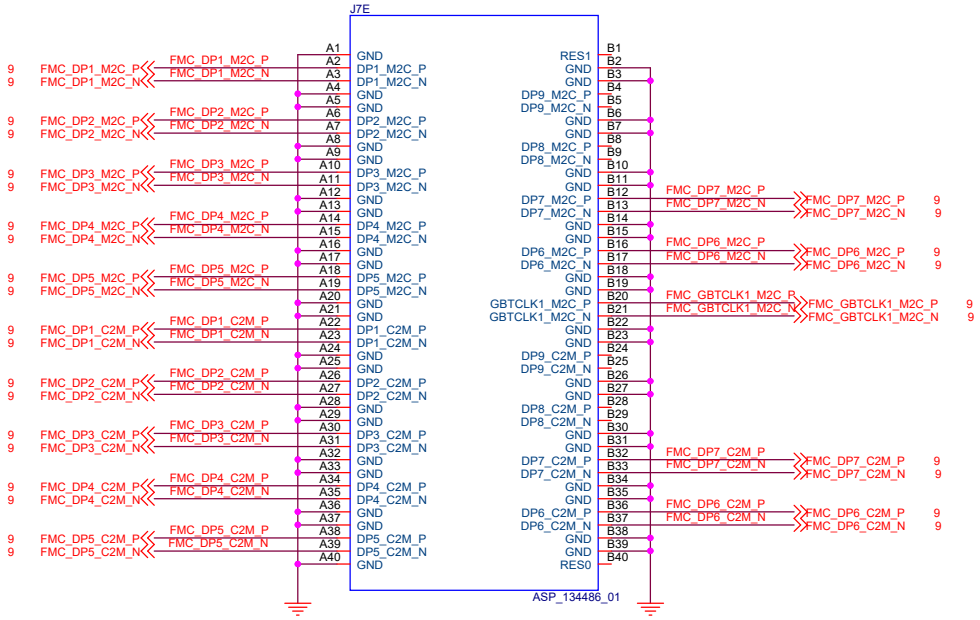

ALINX Confidential

ALINX	www.alinx.com
Title	PAGE24 FMC_HPC_3
Size	Document Number: AXKU040开发板 Schematics
Rev	1.0
Date:	Wednesday, August 11, 2021
Sheet	24 of 32

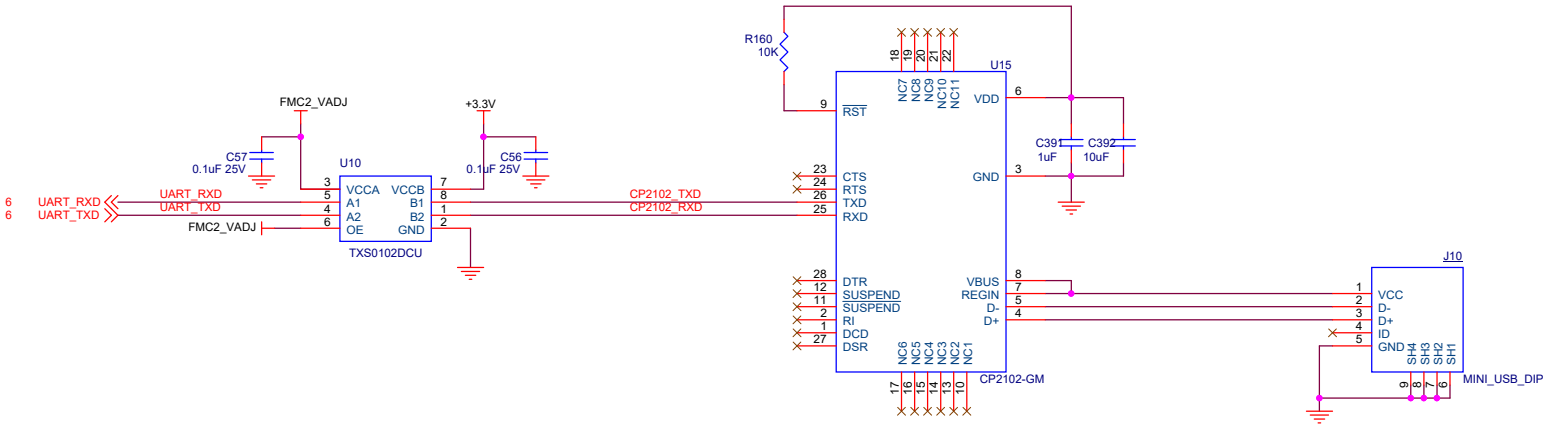

SD Card Connector

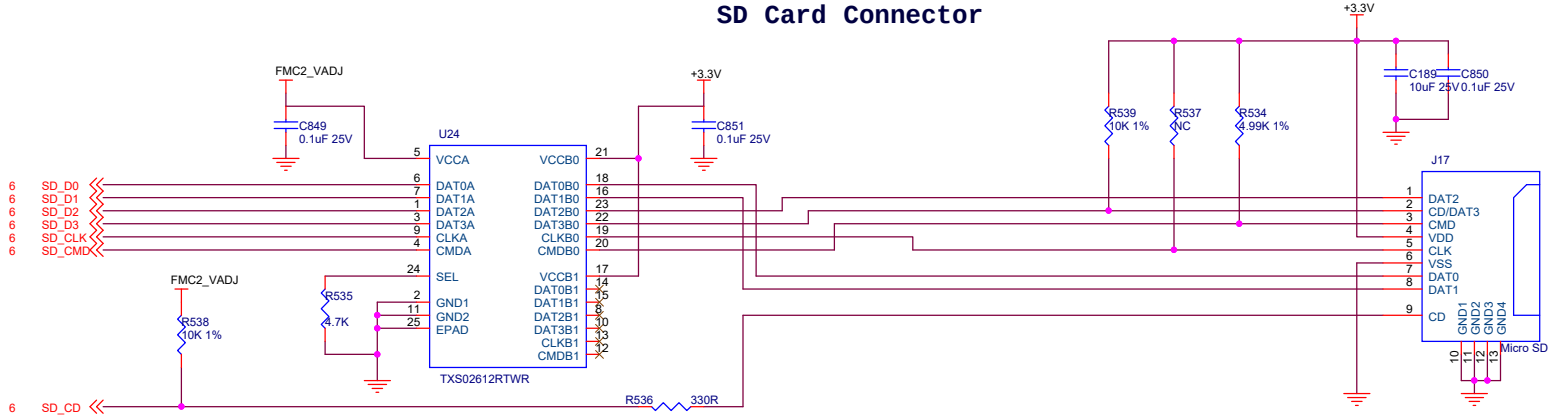

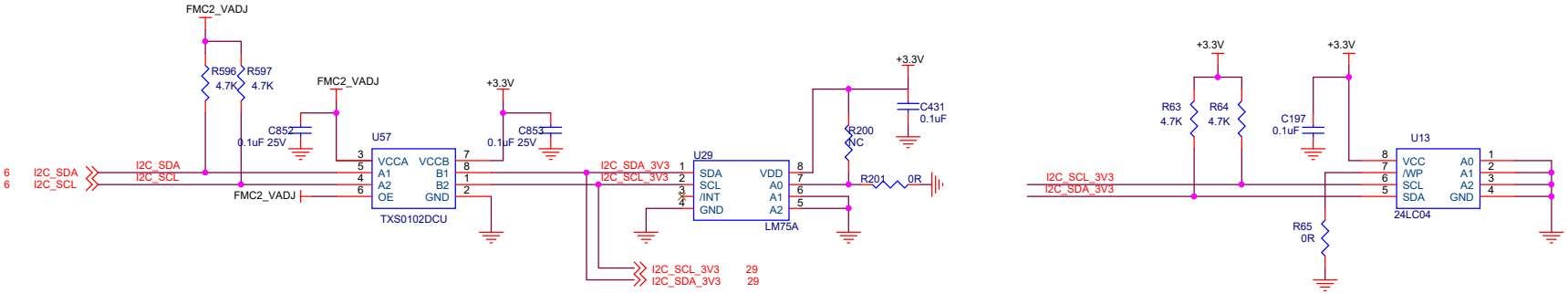

EEPROM

ALINX Confidential

ALINX http://www.alinx.com

Title	PAGE25 UART & SD & Sensor	
Size	Document Number: AXKU040开发板 Schematics	Rev: 1.0
Date: Wednesday, August 11, 2021	Sheet 25 of 32	

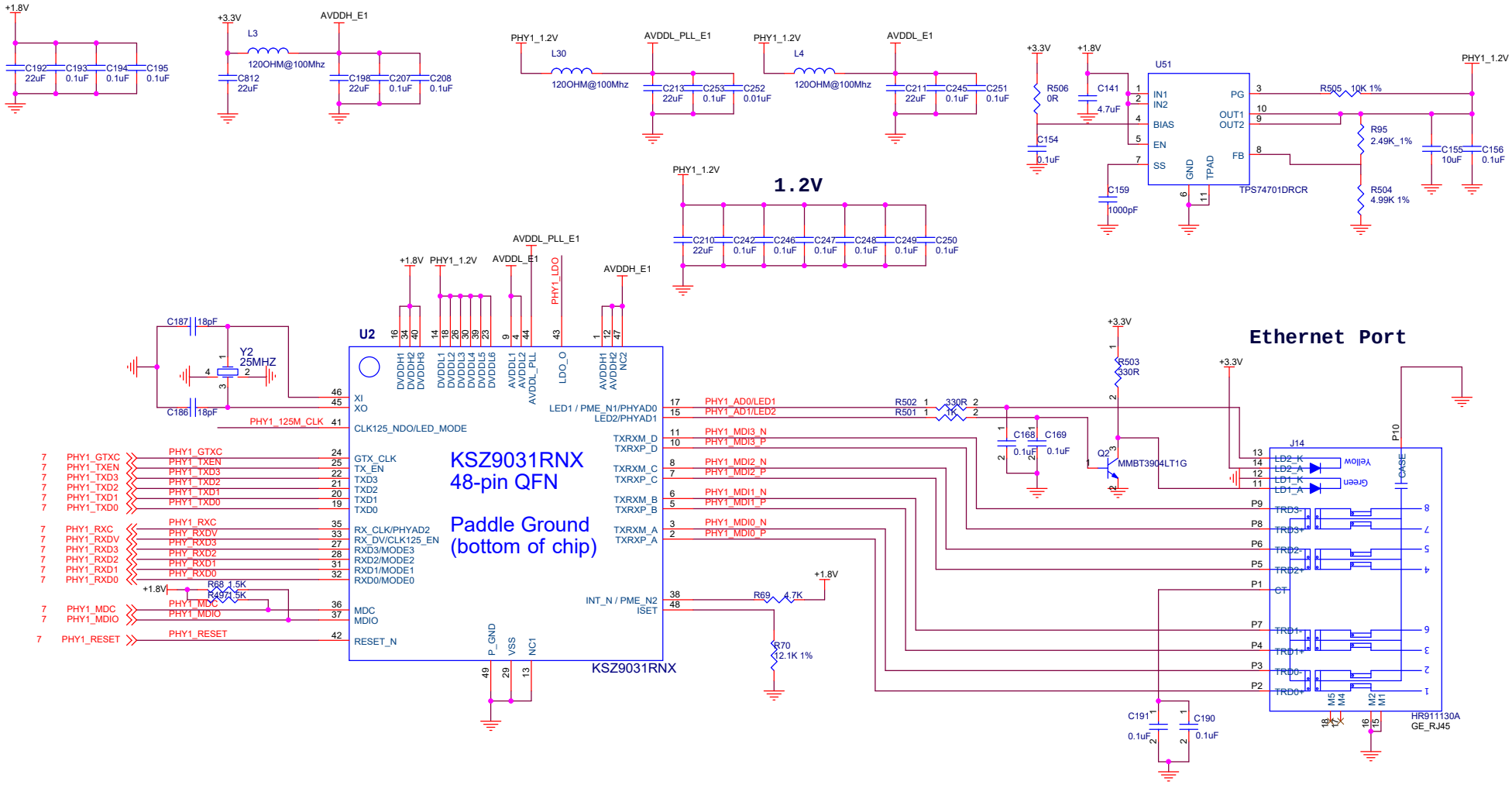

Enable 125Mhz Clock out **Single-LED mode** **RGMII mode - Advertise all capabilities** **PHY Address is 001**

ALINX Confidential

ALINX	http://www.alinx.com	
Title: PAGE26 GPHY1		
Size	Document Number: AXKU040开发板 Schematics	Rev: 1.0
Date: Wednesday, August 11, 2021	Sheet 26 of 32	

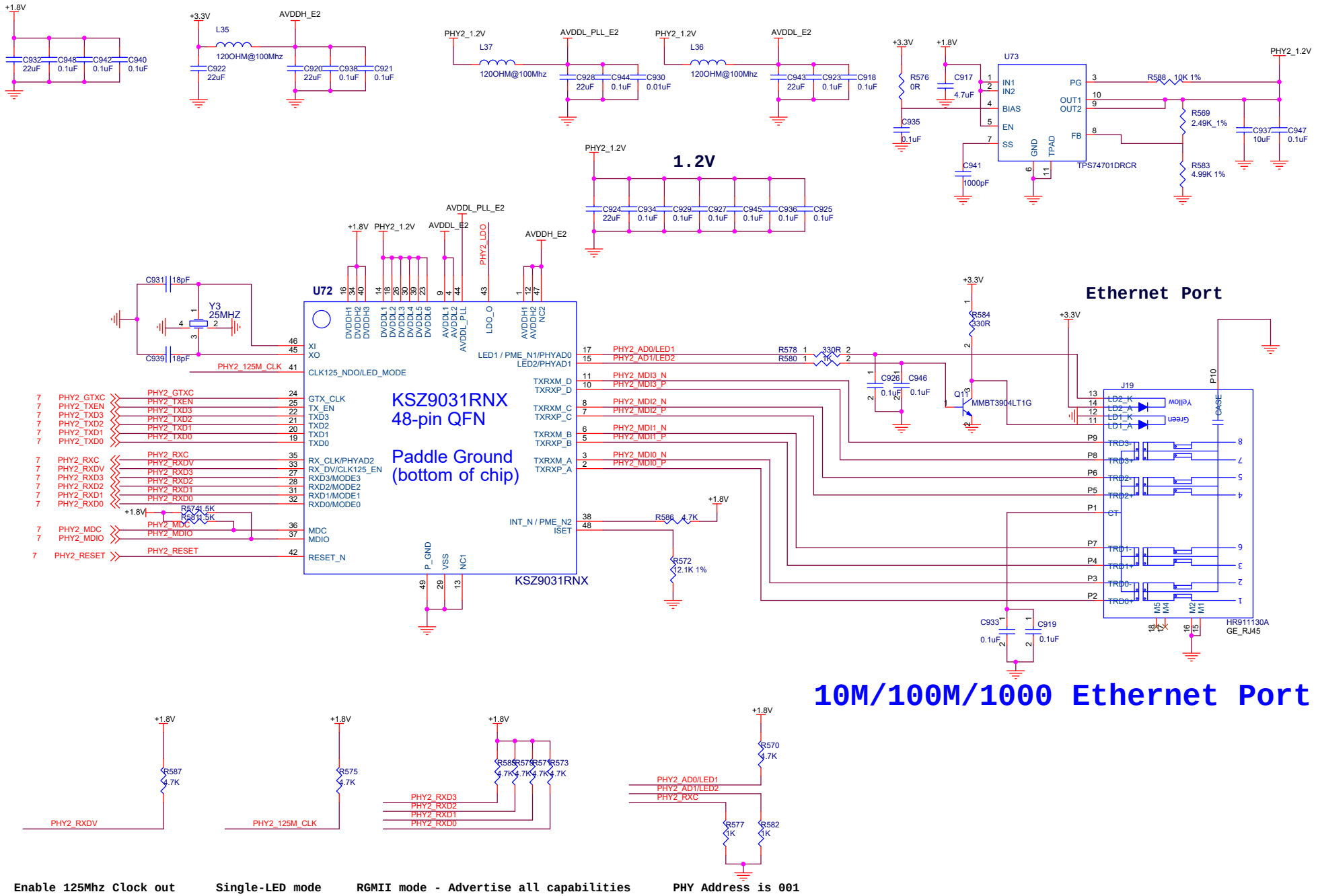

ALINX Confidential

ALINX	http://www.alinx.com
Title	PAGE27 GPHY1
Size	Document Number: AXKU040开发板 Schematics
Rev	1.0
Date:	Wednesday, August 11, 2021
Sheet	27 of 32

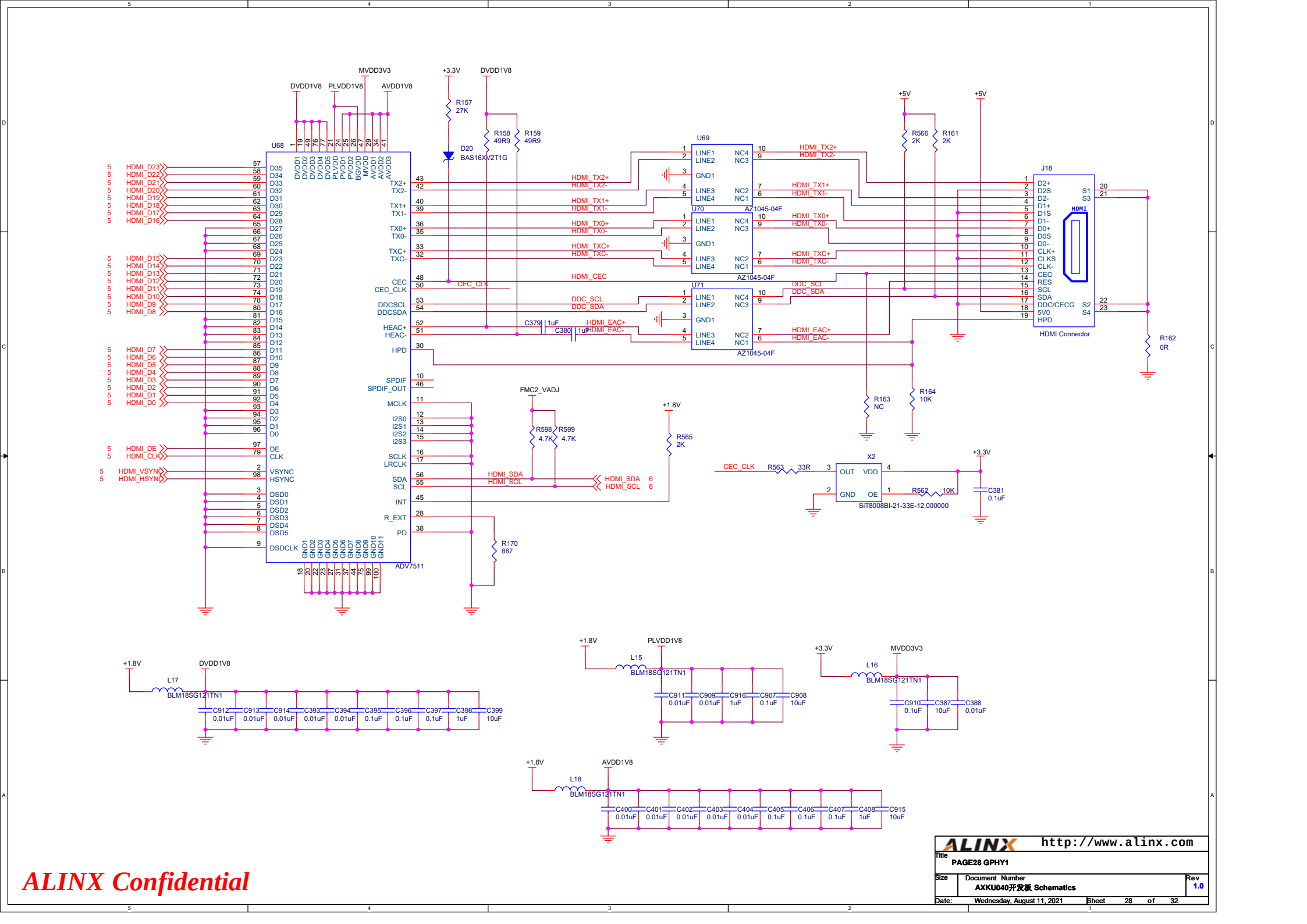
U68
ADV7511
U69
U70
U71
AZ1045-04F
J18
HDMI Connector
X2
SiT8008BI-21-33E-12.000000
D20
BAS16XV2T1G
R157 27K
R158 49R9
R159 49R9
R161 2K
R162 0R
R163 NC
R164 10K
R565 2K
R566 2K
R598 4.7K
R599 4.7K
R170 887
R563 33R
R562 10K
C379 1uF
C380 1uF
C381 0.1uF
FMC2_VADJ
CEC_CLK
HDMI_SDA
HDMI_SCL
HDMI_CEC
DDC_SCL
DDC_SDA
HDMI_TX2+
HDMI_TX2-
HDMI_TX1+
HDMI_TX1-
HDMI_TX0+
HDMI_TX0-
HDMI_TXC+
HDMI_TXC-
HDMI_EAC+
HDMI_EAC-
L15 BLM18SG121TN1
L16 BLM18SG121TN1
L17 BLM18SG121TN1
L18 BLM18SG121TN1
ALINX Confidential
http://www.alinx.com
PAGE28 GPHY1
AXKU040开发板 Schematics
Rev 1.0
Wednesday, August 11, 2021
Sheet 28 of 32

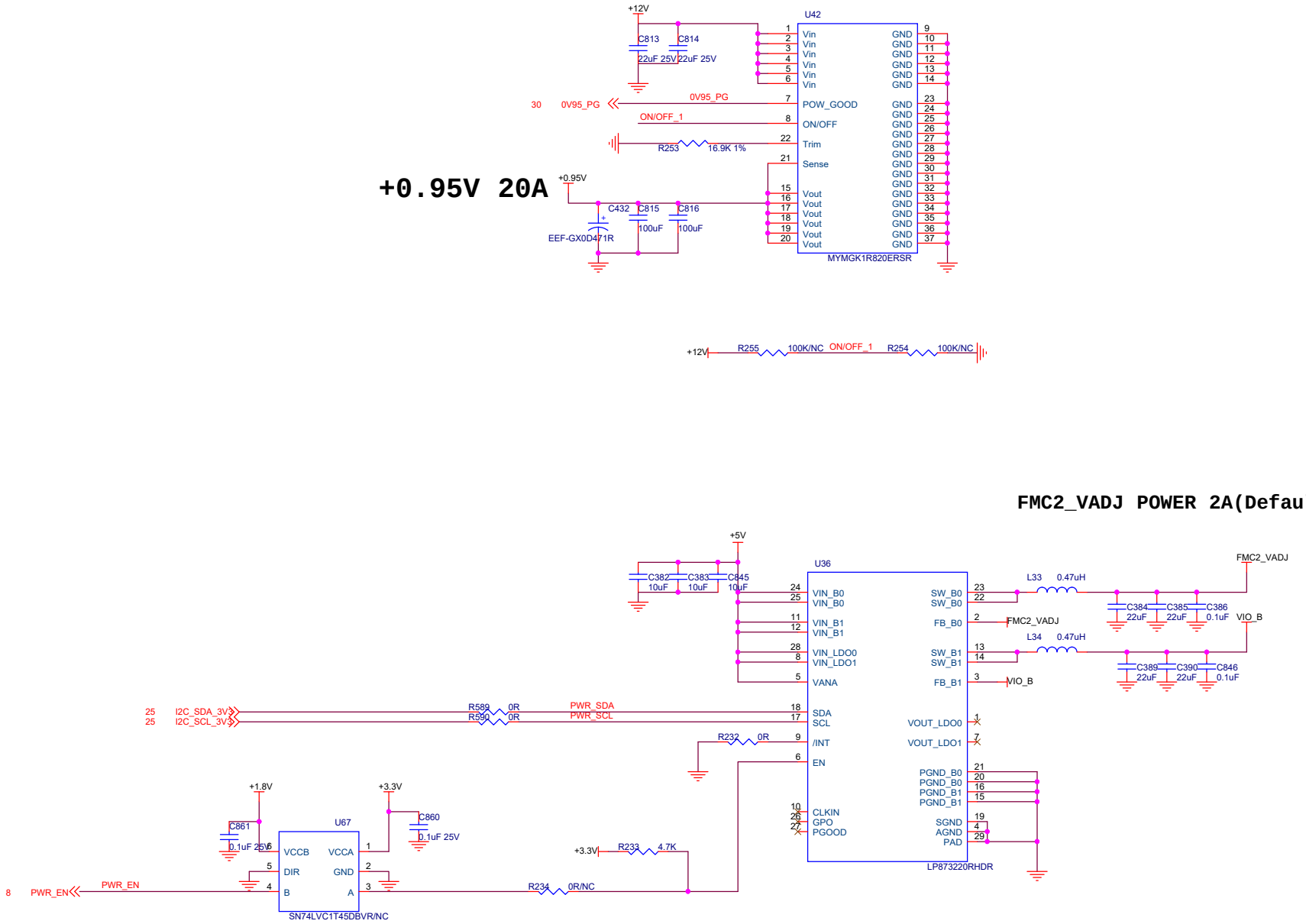

ALINX Confidential

ALINX	http://www.alinx.com	
Title	PAGE29 POWER +1.0V	
Size	Document Number: AXKU040开发板 Schematics	Rev: 1.0
Date: Wednesday, August 11, 2021	Sheet 29 of 32	

5.0V POWER 6A

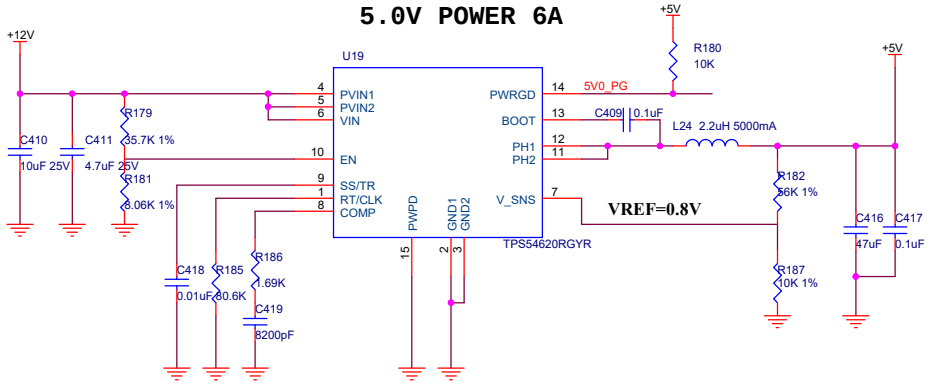

1.8V POWER 6A

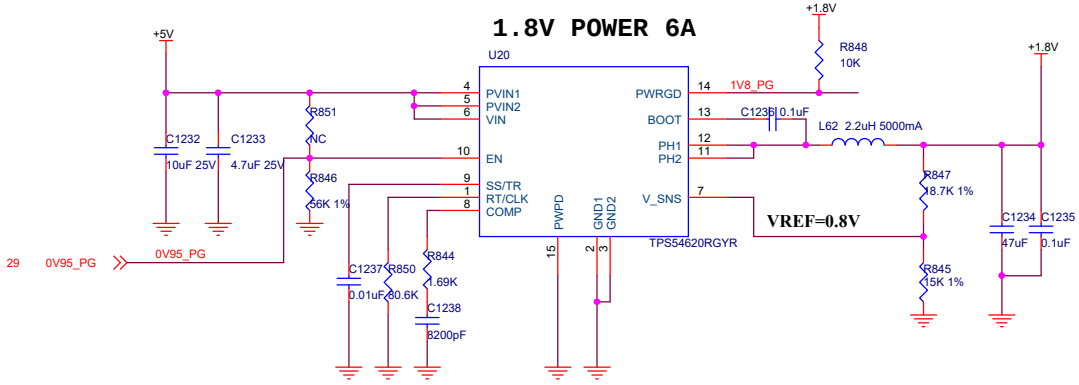

1.2V POWER

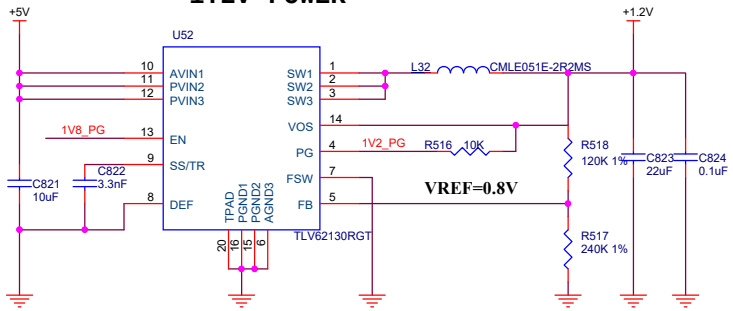

3.3V POWER

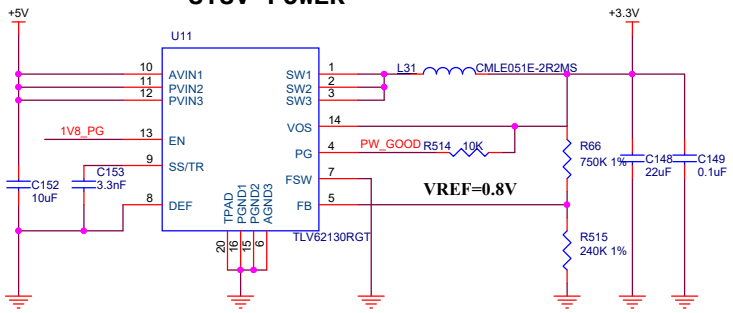

ALINX Confidential

ALINX http://www.alinx.com

Title: PAGE30 POWER 5V/3.3V/1.5V/1.8V

Size | Document Number: AXKU040开发板 Schematics | Rev: 1.0

Date: Wednesday, August 11, 2021 | Sheet 30 of 32

Vout=0.8 x (1 + R1/R2)

1.2V

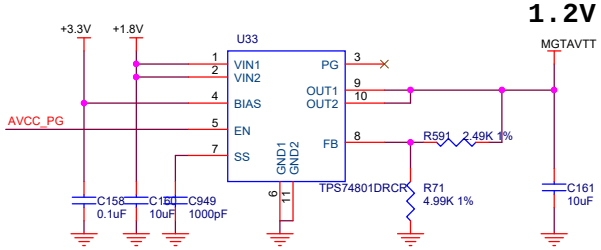

+1.0V 3A

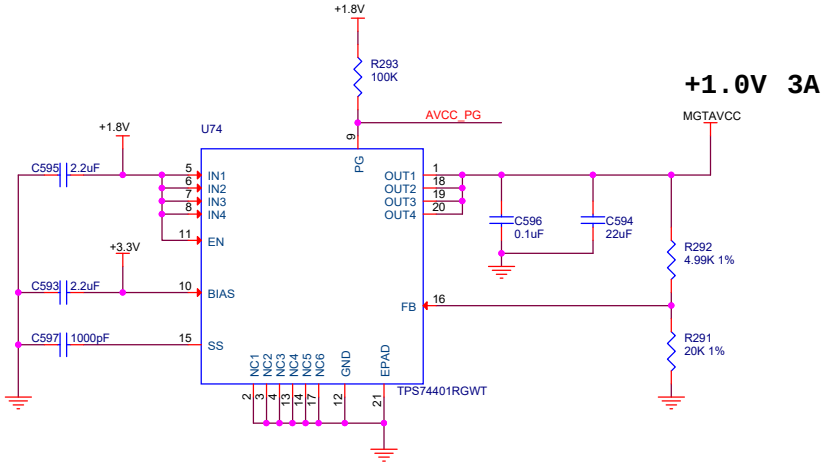

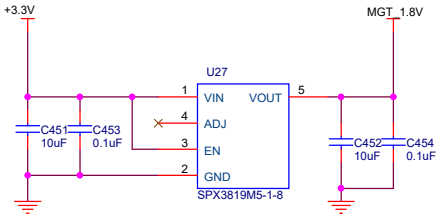

ALINX Confidential

ALINX http://www.alinx.com

Title: PAGE31 POWER MGT

Size | Document Number: AXKU040开发板 Schematics | Rev: 1.0

Date: Wednesday, August 11, 2021 | Sheet 31 of 32

12V/3A AC Adapter

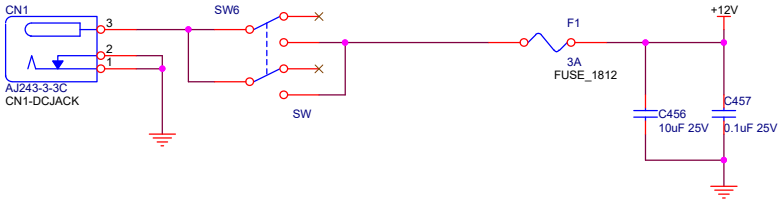

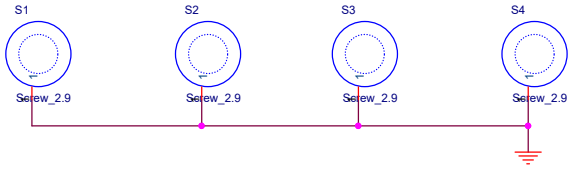

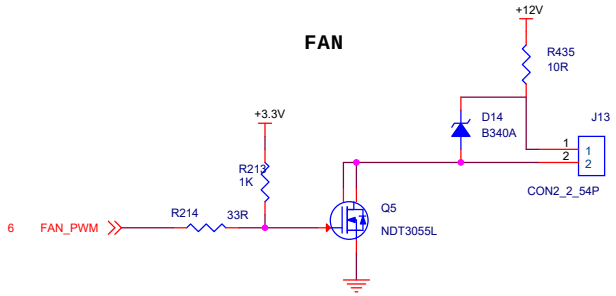

ALINX Confidential

ALINX http://www.alinx.com		
Title: PAGE32 POWER IN		
Size	Document Number: AXKU040开发板 Schematics	Rev: 1.0
Date: Wednesday, August 11, 2021	Sheet 32 of 32	