# ESP32_5V BOARD

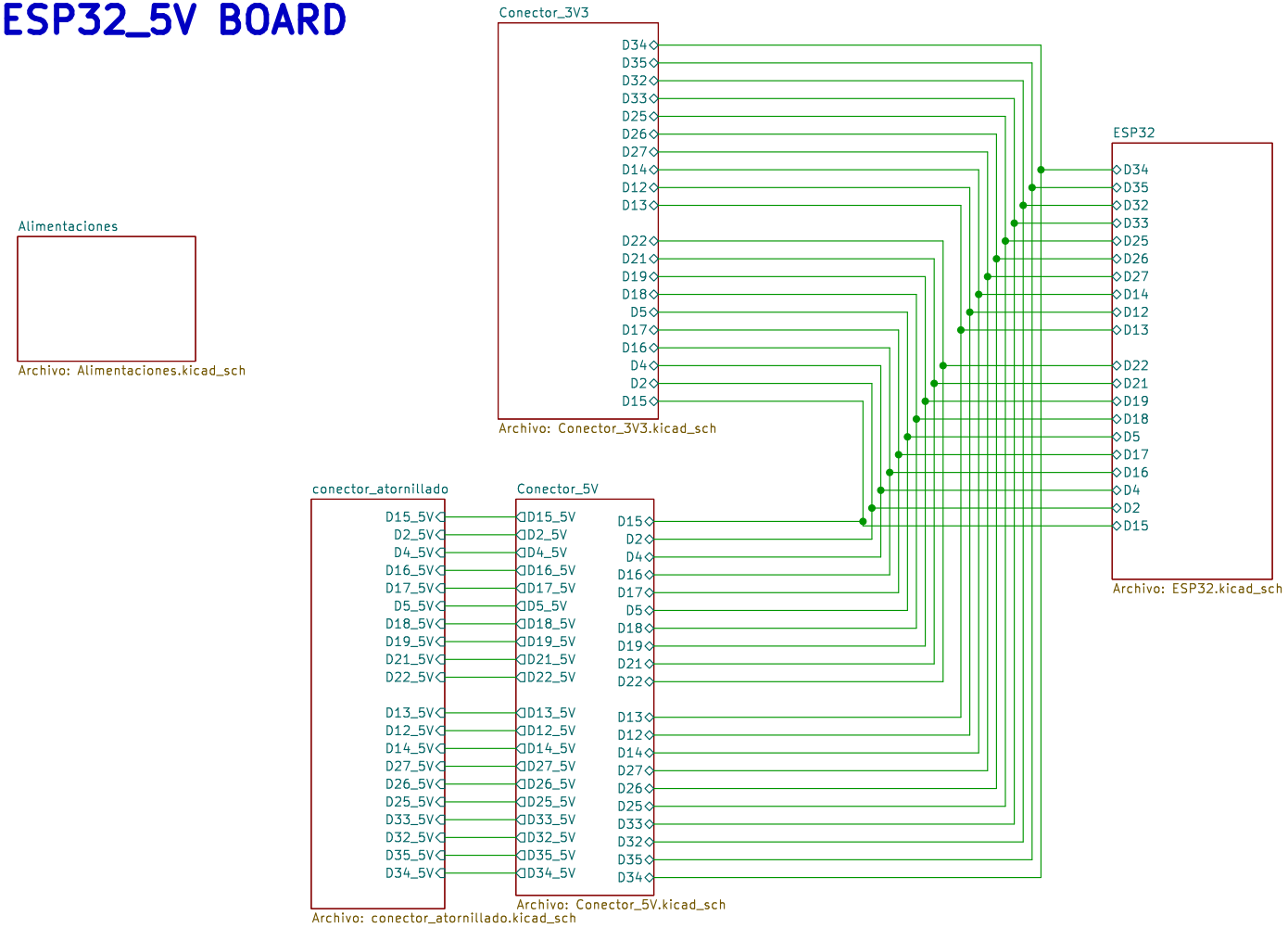


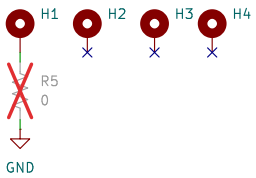


Sheet: /
File: ESP32_5V.kicad_sch

**Title:**

| Size: A4 | Date: | Rev: |
|---|---|---|
| KiCad E.D.A. 9.0.7 | | Id: 1/6 |

# Conversor de Vcc a +5V

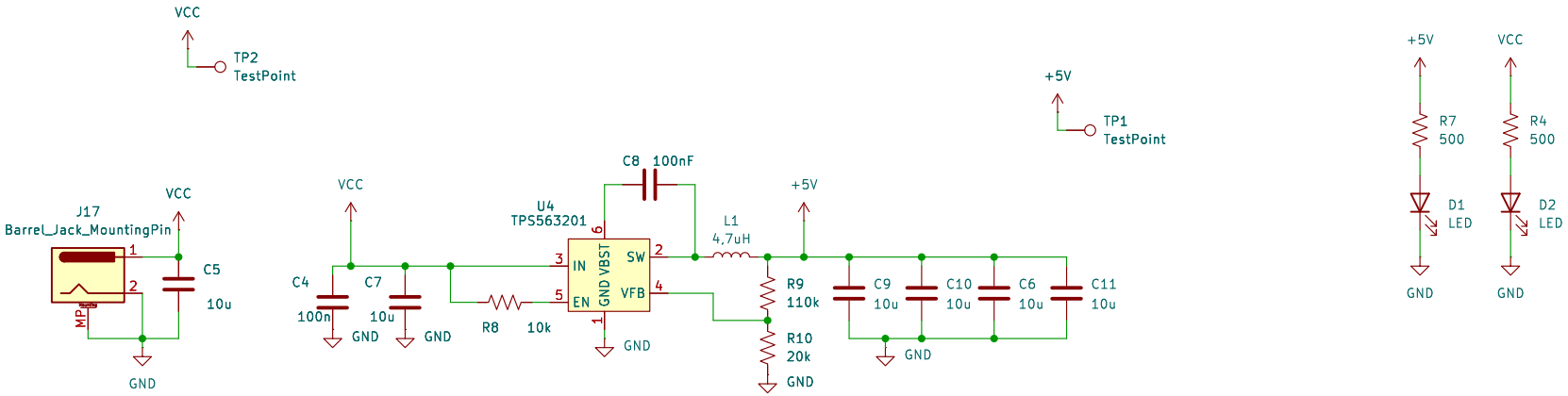


Sheet: /Alimentaciones/
File: Alimentaciones.kicad_sch

**Title:**

| Size: A4 | Date: | Rev: |
|---|---|---|
| KiCad E.D.A. 9.0.7 | | Id: 1/6 |

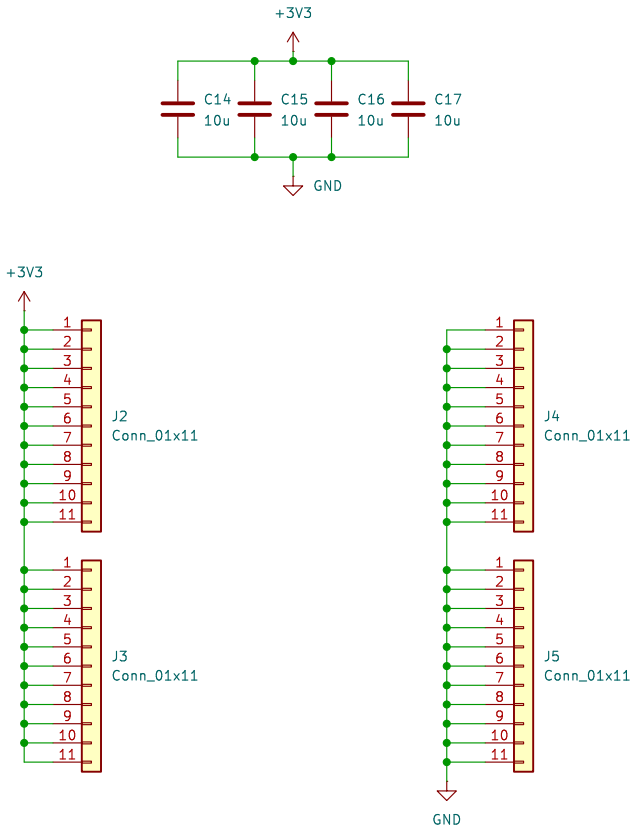


# Conector izquierdo 3V3

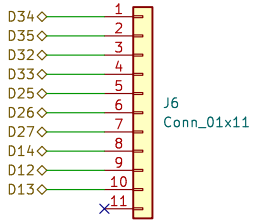


# Conector derecho 3V3

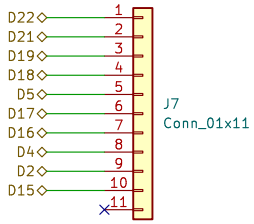


Sheet: /Conector_3V3/
File: Conector_3V3.kicad_sch

**Title:**

| Size: A4 | Date: | Rev: |
|---|---|---|
| KiCad E.D.A. 9.0.7 | | Id: 2/6 |

# Drivers

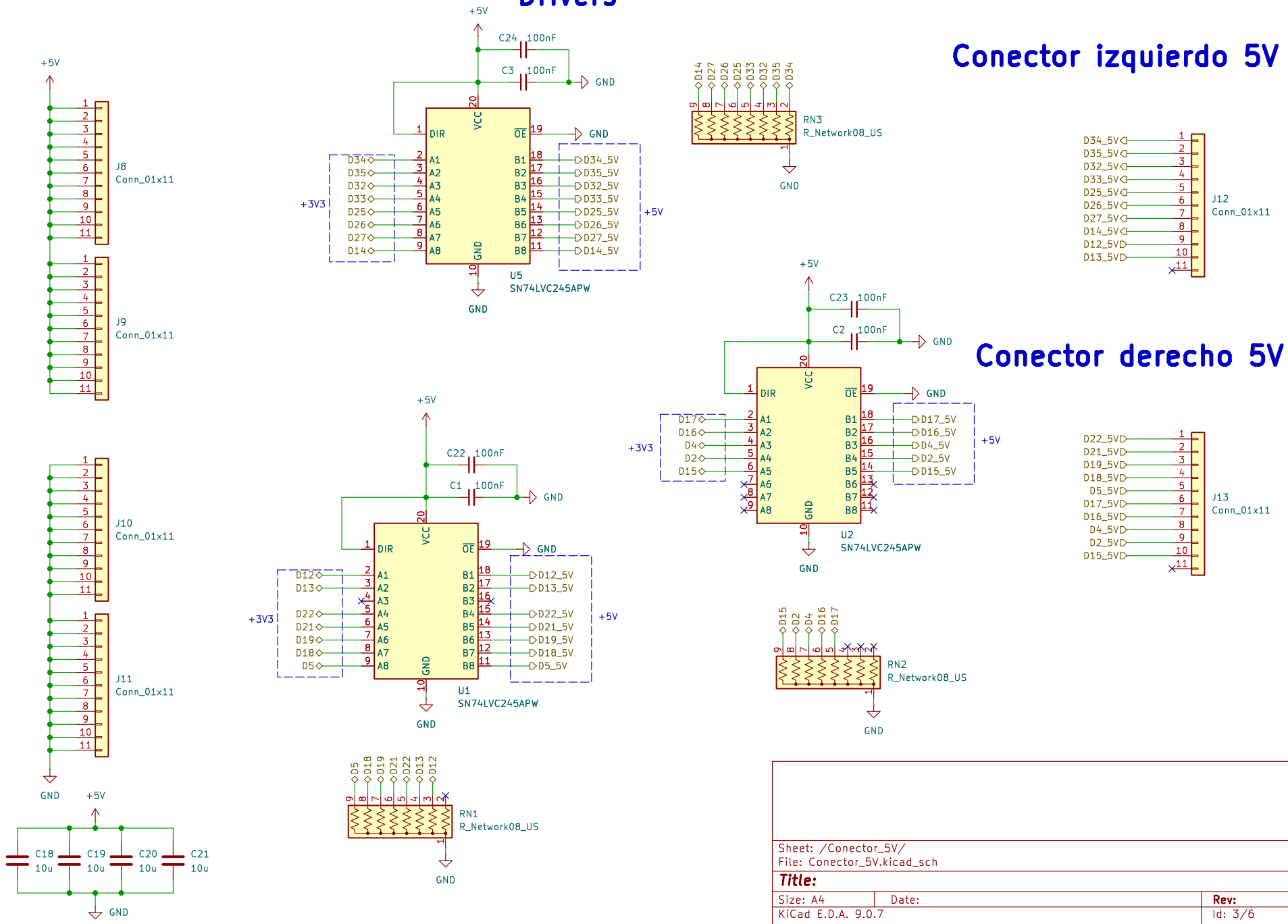
Conector izquierdo 5V
Conector derecho 5V
U5
SN74LVC245APW
U2
SN74LVC245APW
U1
SN74LVC245APW
J8
Conn_01x11
J9
Conn_01x11
J10
Conn_01x11
J11
Conn_01x11
J12
Conn_01x11
J13
Conn_01x11
RN1
R_Network08_US
RN2
R_Network08_US
RN3
R_Network08_US
C18 10u
C19 10u
C20 10u
C21 10u
C1 100nF
C2 100nF
C3 100nF
C22 100nF
C23 100nF
C24 100nF
+5V
+3V3
GND
Sheet: /Conector_5V/
File: Conector_5V.kicad_sch
Title:
Size: A4
Date:
Rev:
KiCad E.D.A. 9.0.7
Id: 3/6

# ESP32

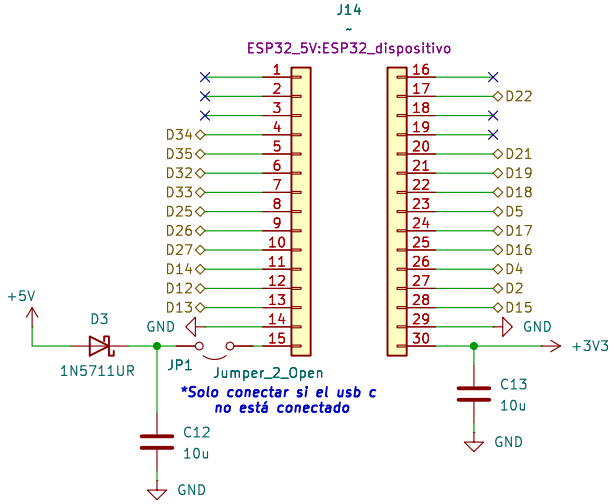


Sheet: /ESP32/
File: ESP32.kicad_sch

**Title:**

| Size: A4 | Date: | **Rev:** |
|---|---|---|
| KiCad E.D.A. 9.0.7 | | Id: 4/6 |

# Conectores atronillados

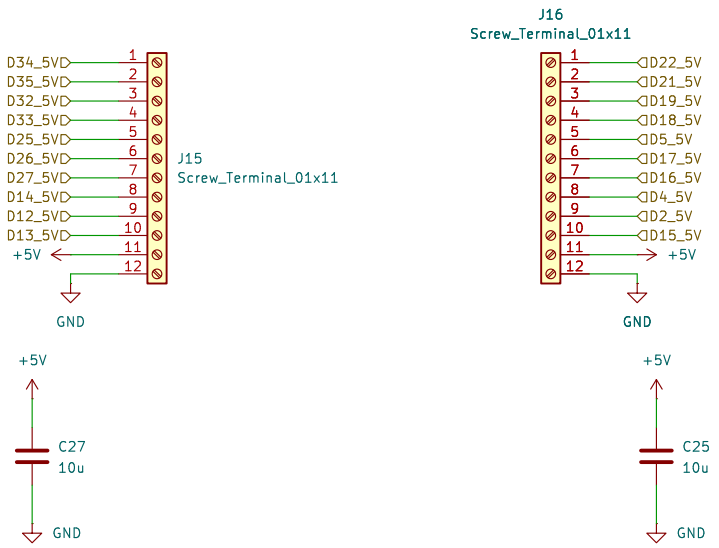


Sheet: /conector_atornillado/
File: conector_atornillado.kicad_sch

**Title:**

| Size: A4 | Date: | **Rev:** |
|---|---|---|
| KiCad E.D.A. 9.0.7 | | Id: 5/6 |