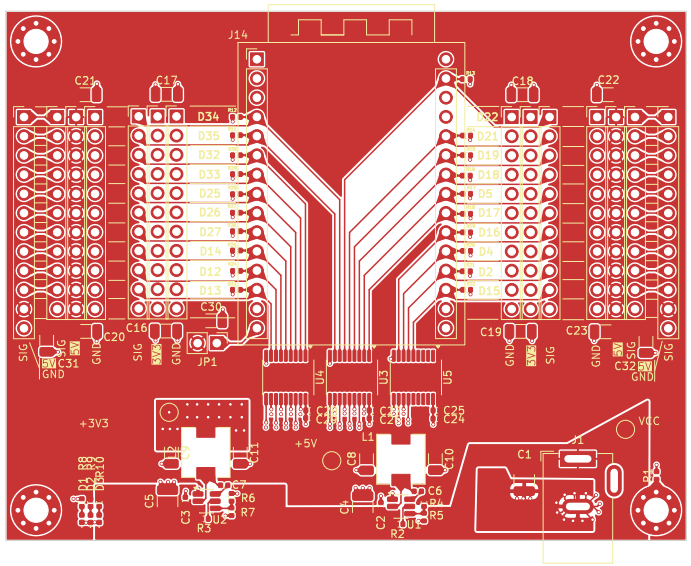

Sheet:
File: ESP32_5V.kicad_pcb

Title:

Size: A4	Date:	Rev:
KiCad E.D.A. 9.0.7		Id: 1/4

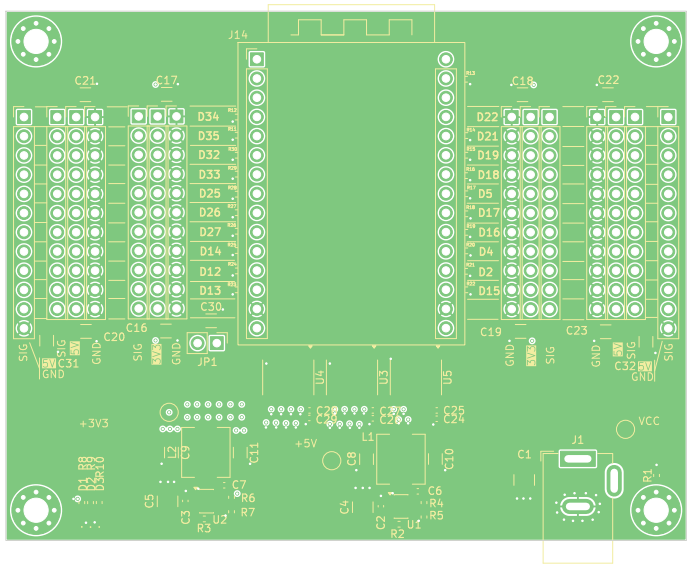

Sheet:
File: ESP32_5V.kicad_pcb

Title:

Size: A4	Date:	Rev:
KiCad E.D.A. 9.0.7		Id: 2/4

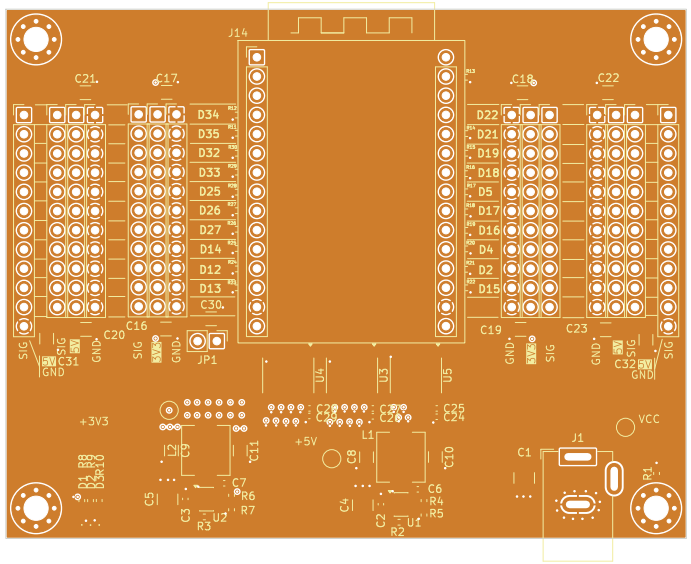

Sheet:
File: ESP32_5V.kicad_pcb

Title:

Size: A4	Date:	Rev:
KiCad E.D.A. 9.0.7		Id: 3/4

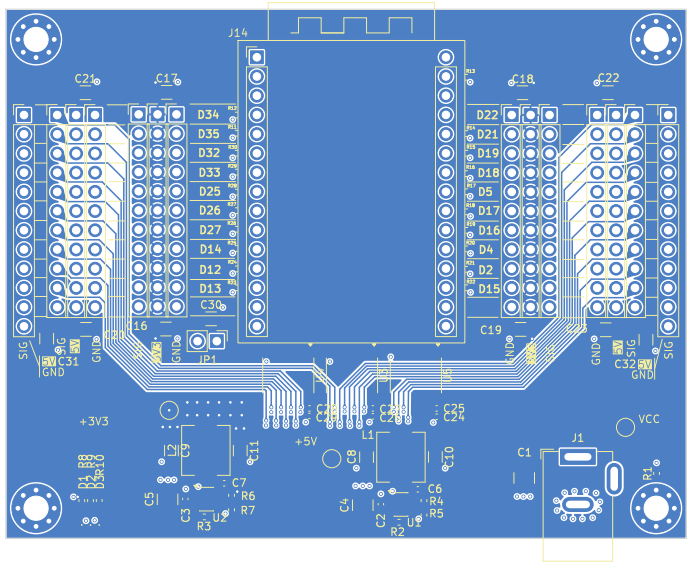

Sheet:
File: ESP32_5V.kicad_pcb

Title:

Size: A4	Date:	Rev:
KiCad E.D.A. 9.0.7		Id: 4/4