DISP REGISTER

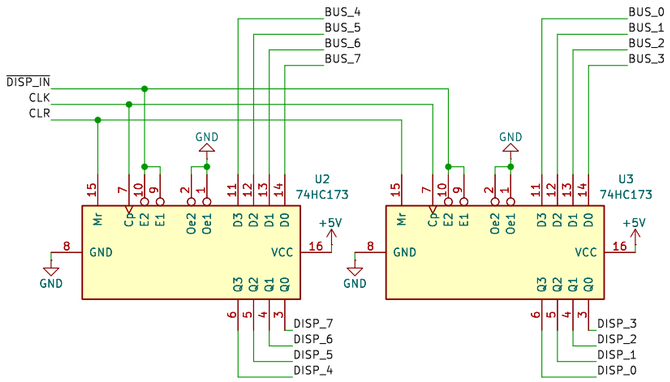

DIGIT SELECT

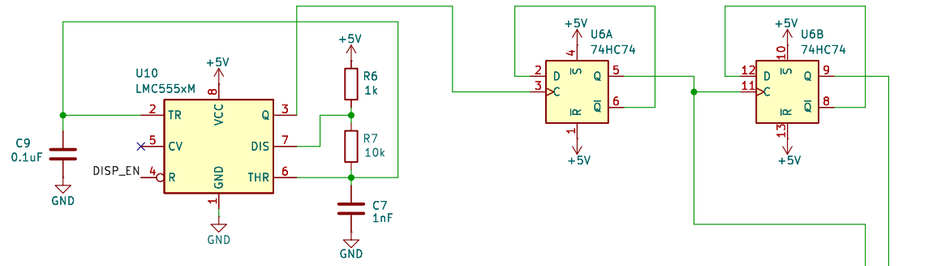

CATHODE DRIVERS

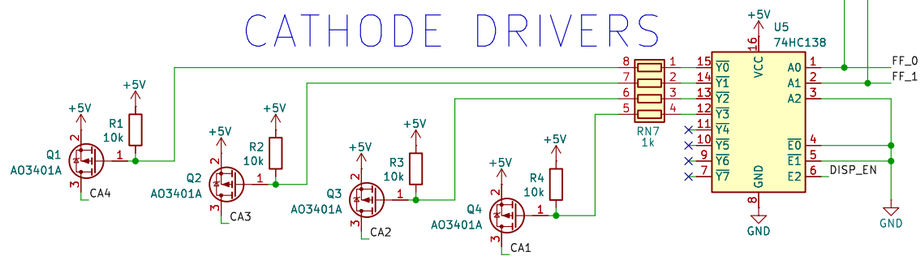

EEPROM

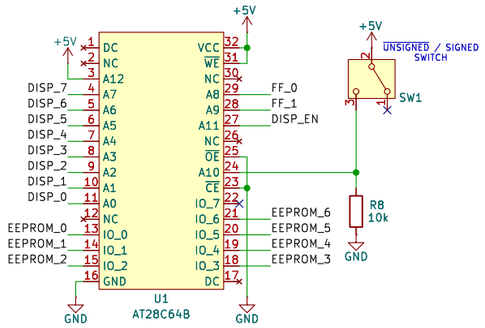

SEGMENT SINKS

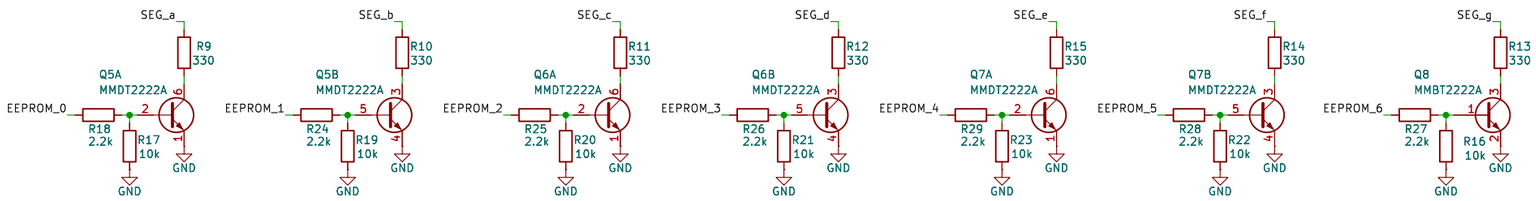

PCB CONNECTORS

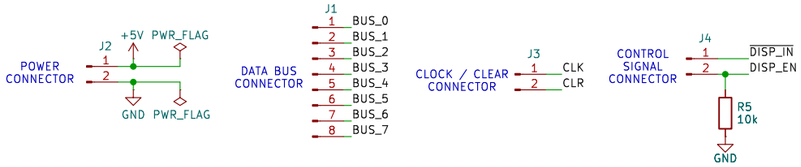

4-DIGIT SEVEN-SEGMENT DISPLAY

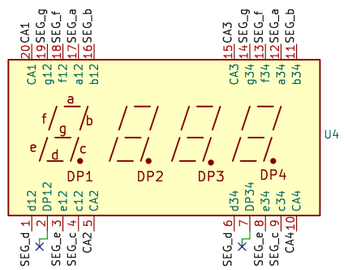

TOOLING
HOLES

POWER AND DECOUPLING CAPACITORS

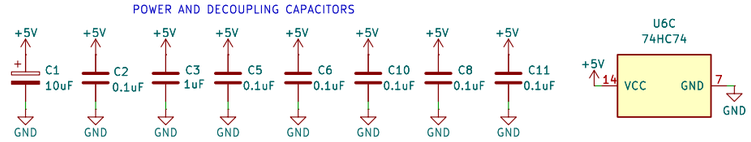

Sheet: /
File: DISP.kicad_sch

Title:

Size: A3	Date:	Rev:
KiCad E.D.A. 8.0.6		Id: 1/1