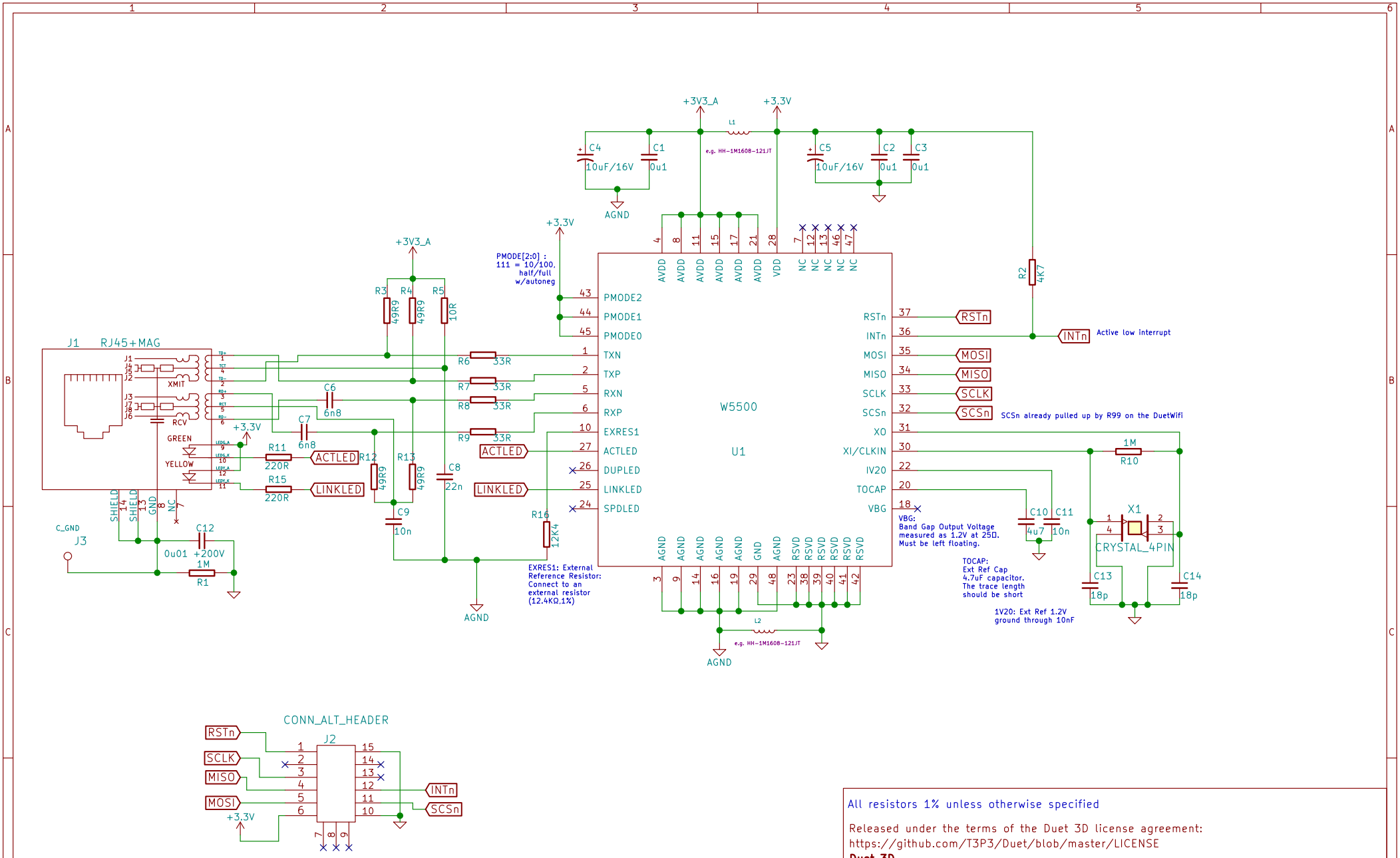

All resistors 1% unless otherwise specified

Released under the terms of the Duet 3D license agreement:
https://github.com/T3P3/Duet/blob/master/LICENSE

Duet 3D

Sheet: /
File: EthernetModule.sch

Title: DuetEthernetModule

Size: A4	Date: 2017-02-01	**Rev: 1.04**
KiCad E.D.A. kicad (5.1.4)-1		Id: 1/1