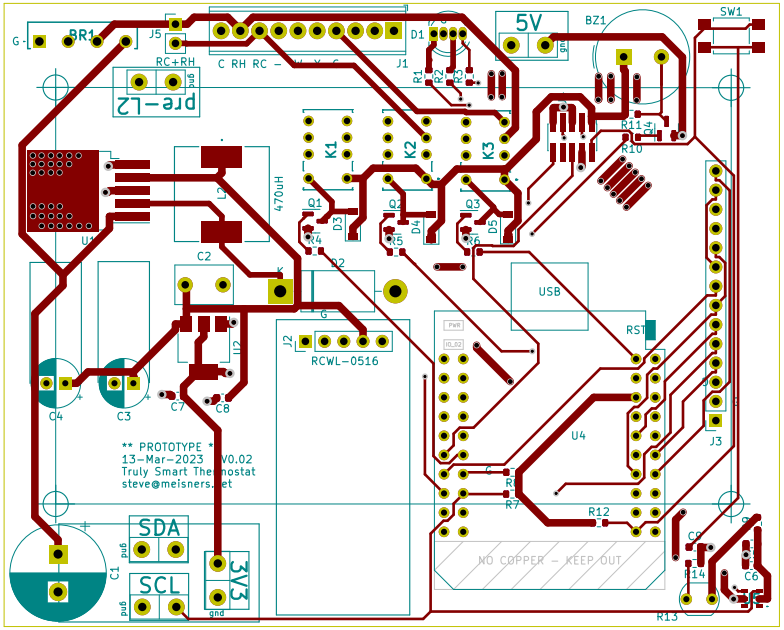

steve@meisners.net
Steve Meisner

Sheet:
File: Thermostat.kicad_pcb

Title: Smart Thermostat

Size: A4	Date: 2023-03-03	**Rev: V0.01**
KiCad E.D.A. kicad 6.0.11+dfsg-1~bpo11+1		Id: 1/1