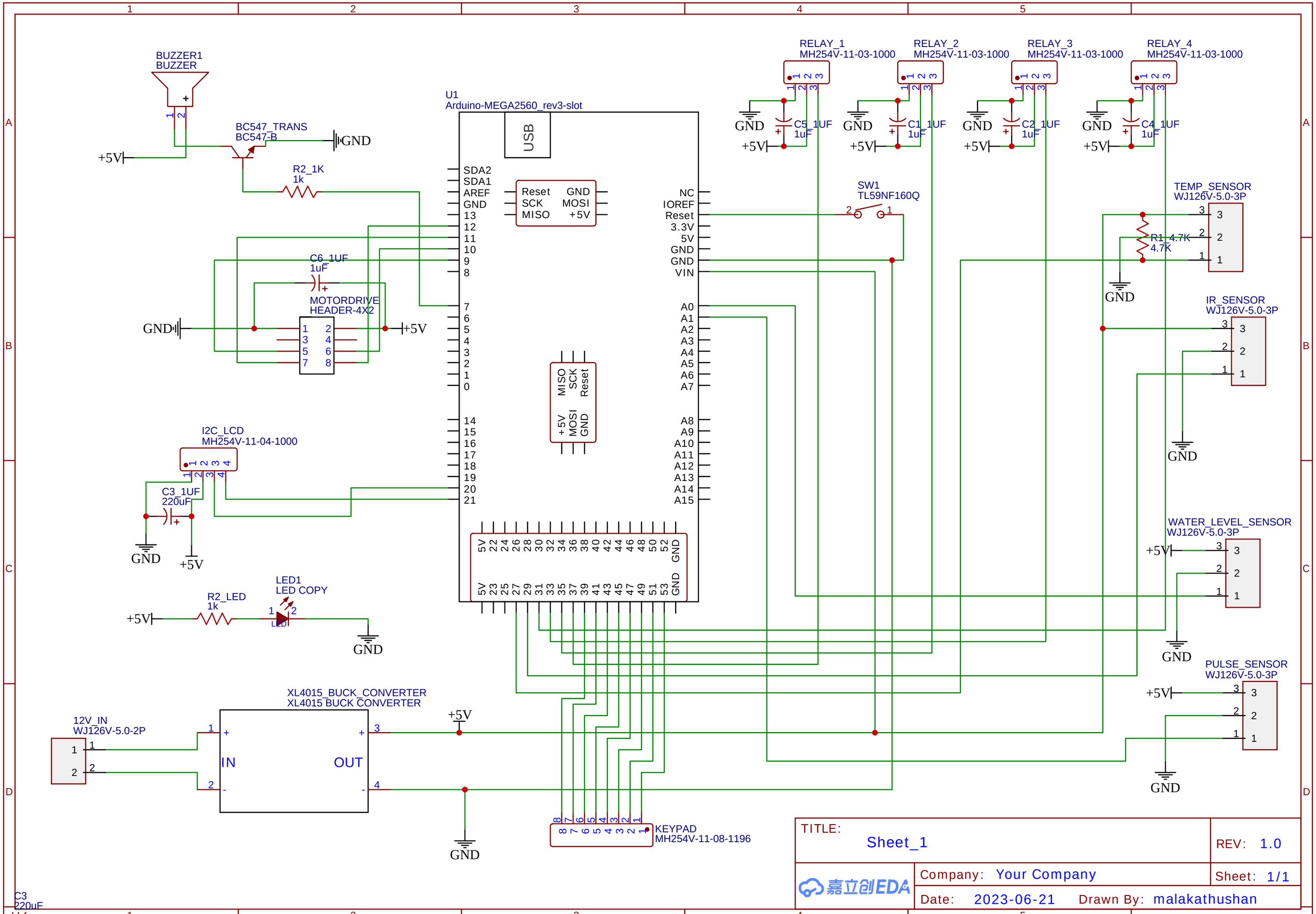
BUZZER1
BUZZER
BC547_TRANS
BC547-B
R2_1K
1k
+5V
GND
U1
Arduino-MEGA2560_rev3-slot
USB
SDA2
SDA1
AREF
GND
13
12
11
10
9
8
7
6
5
4
3
2
1
0
14
15
16
17
18
19
20
21
Reset
SCK
MISO
GND
MOSI
+5V
NC
IOREF
Reset
3.3V
5V
GND
GND
VIN
A0
A1
A2
A3
A4
A5
A6
A7
A8
A9
A10
A11
A12
A13
A14
A15
C6_1UF
1uF
MOTORDRIVE
HEADER-4X2
I2C_LCD
MH254V-11-04-1000
C3_1UF
220uF
LED1
LED COPY
R2_LED
1k
XL4015_BUCK_CONVERTER
XL4015 BUCK CONVERTER
IN
OUT
12V_IN
WJ126V-5.0-2P
KEYPAD
MH254V-11-08-1196
RELAY_1
MH254V-11-03-1000
RELAY_2
MH254V-11-03-1000
RELAY_3
MH254V-11-03-1000
RELAY_4
MH254V-11-03-1000
C5_1UF
1uF
C1_1UF
1uF
C2_1UF
1uF
C4_1UF
1uF
SW1
TL59NF160Q
TEMP_SENSOR
WJ126V-5.0-3P
R1_4.7K
4.7K
IR_SENSOR
WJ126V-5.0-3P
WATER_LEVEL_SENSOR
WJ126V-5.0-3P
PULSE_SENSOR
WJ126V-5.0-3P
C3
220uF
TITLE:
Sheet_1
REV: 1.0
Company: Your Company
Sheet: 1/1
Date: 2023-06-21
Drawn By: malakathushan
嘉立创EDA