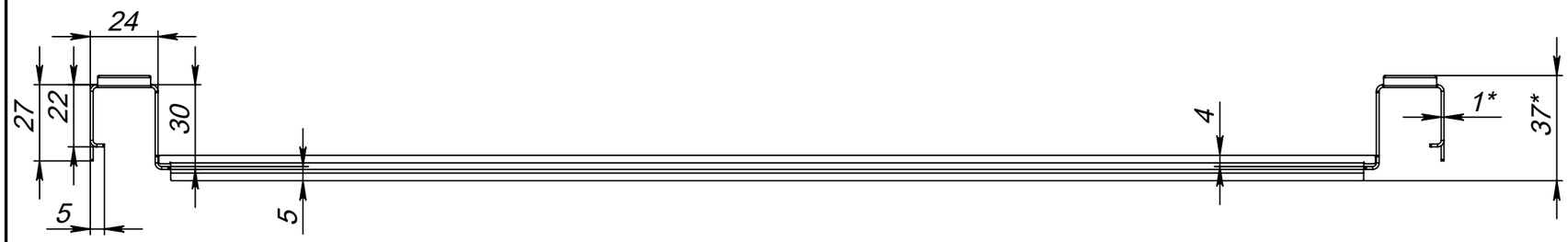

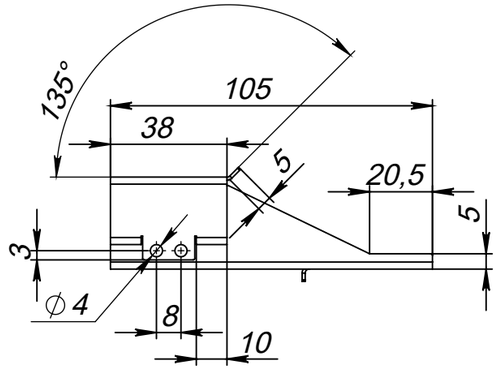

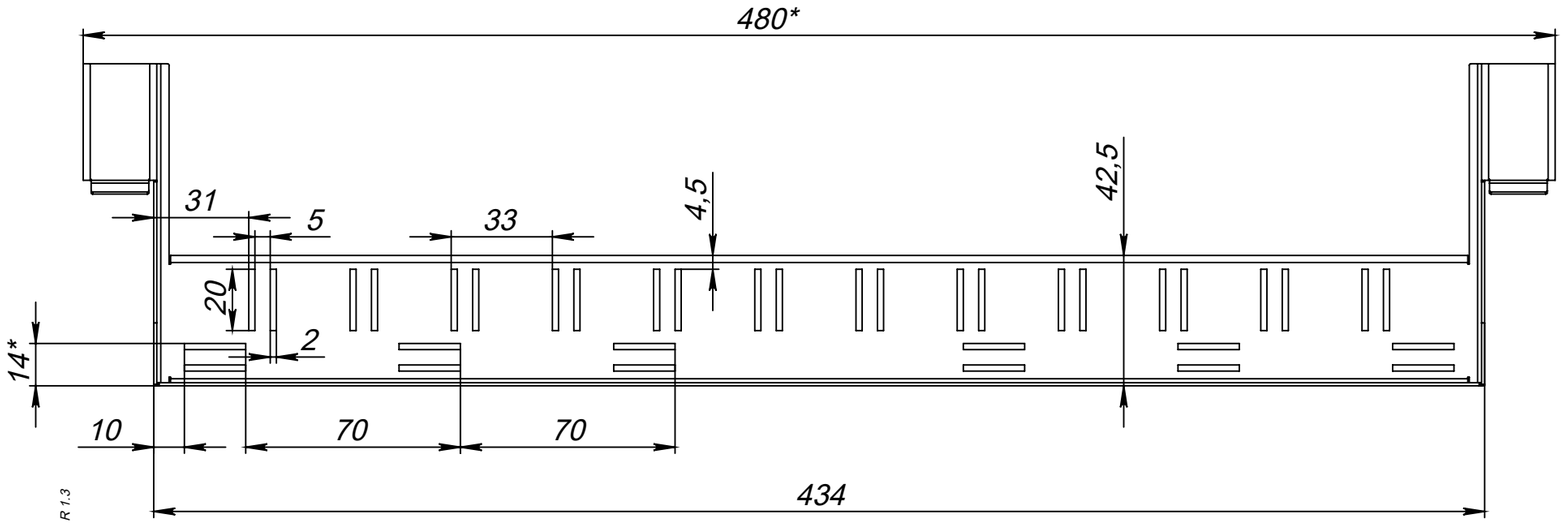

*

- The organizer is designed to be installed in cabinets with a depth of 1100 mm or more (tested on Vertiv VR3100/VR3107).
It will NOT fit cabinets with a depth less then 1100 mm!;
- Organizer must to be installed on the line card before being installed in the switch;
- Use model to adjust the ratio and bend radius;
- All dimentions are in millimeters;

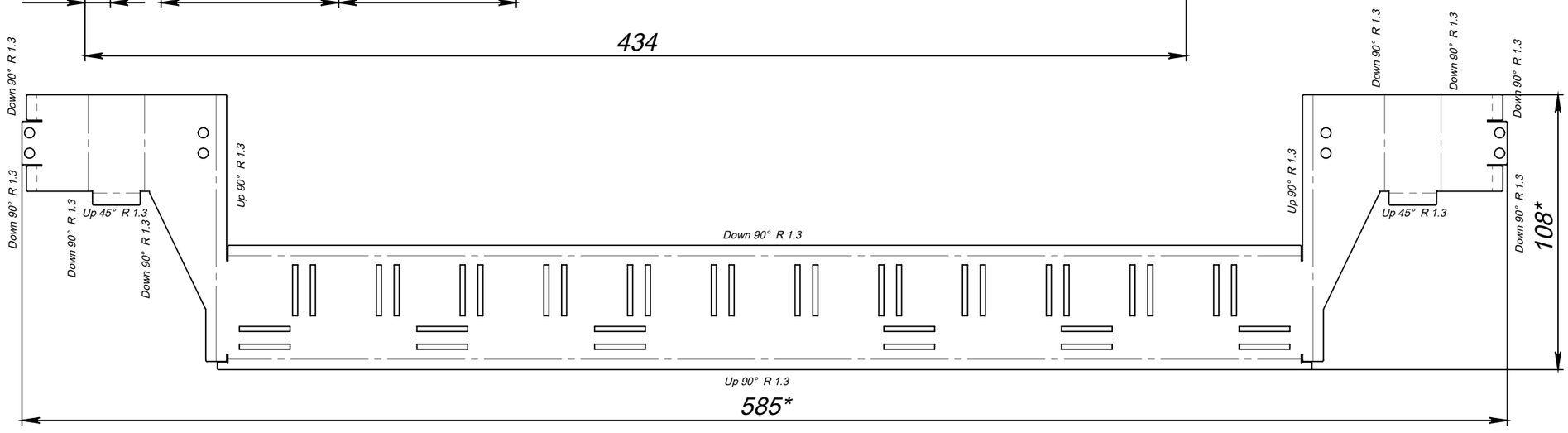

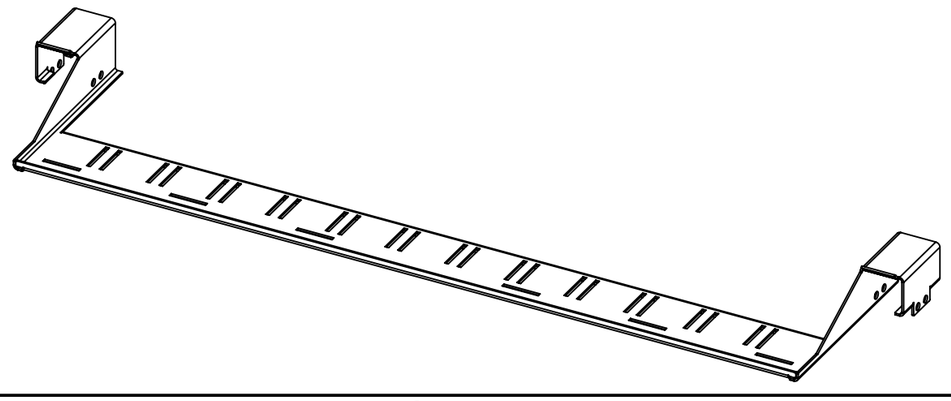

Изм.	Лист	№ докум.	Подп.	Дата
Разраб.				
Пров.				
Т. контр.				
Н. контр.				
Утв.				

Arista 7800R3 series line card organizer

dtel-ix
the peering company

Лит.	Масса	Масштаб

Лист | Листов

Material: Galvanized steel 1mm

Dyeing:
Powder coating
RAL 9005 or 7004

Перв. примен. | Справ. № | Подп. и дата | Инв. № дубл. | Взам. инв. № | Подп. и дата | Инв. № подл.

Файл: Arista 7800R3 series line card organizer_SW20

A

2 | 1 | Копировал | Формат А3