Request for Proposal

For

Software Development, Integration & Test (Genesis/RTS2)

Introduction 1

1.1 Purpose of this document 1
1.2 Document history 1
1.3 Abbreviations and definitions 1

2 Project Overview 2

2.1 Tool Connected Ecosystem 2
2.2 Hardware/ Software Decomposition 2
2.3 Differences between Genesis and RTS2 3

3 Engagement Scope 3

3.1 Genesis – application software development & test 3
3.1.1 MES Protocol Handling 3
3.1.2 Web Frontend & Backend 3
3.1.3 Fieldbus Protocol Handling 3
3.1.4 Test Hardware 3
3.1.5 Offsite/ Onsite Effort 3
3.2 RTS2 – integration & configuration of software on the tool and system testing 4
3.2.1 RTS2 Software Integration & Test 4
3.2.2 Test Hardware 4
3.2.3 Offsite/ Onsite Effort 4

4 Engagement Timeline 4

4.1 Genesis Timeline 4
4.2 RTS2 Timeline 4

5 Source Code, Intellectual Property & Ownership 4

Appendix A: Terms and Conditions of Purchase for the United States 5

Introduction

1.1 Purpose of this document

This document is intended as a request for a proposal for the software development, integration and test for power tools, under two projects called Genesis & RTS2.

© Ingersoll Rand 2026. All rights are reserved. Reproduction or transmission in whole or in part, in any form or by any means, electronic, mechanical or otherwise, is prohibited without the prior written consent of the copyright owner.

1.2 Document history

Rev	Release Date	Description of changes
1.0	27 Feb 2026	Initial Draft

1.3 Abbreviations and definitions

Abbreviation	Description
BLE	Bluetooth Low Energy communication standards

IR	Ingersoll Rand
Wi-Fi	Wireless Fidelity IEEE 802.11 communication standards
802.15.4	IEEE 802.15.4 communication standards
5G	5th generation mobile/ cellular technology as a private network

2 Project Overview

Ingersoll Rand is developing new power tools in two projects code named Genesis and RTS2. The tools operate within a connected ecosystem.

2.1 Tool Connected Ecosystem

The interactions of the tools with other entities in the ecosystem are shown below.

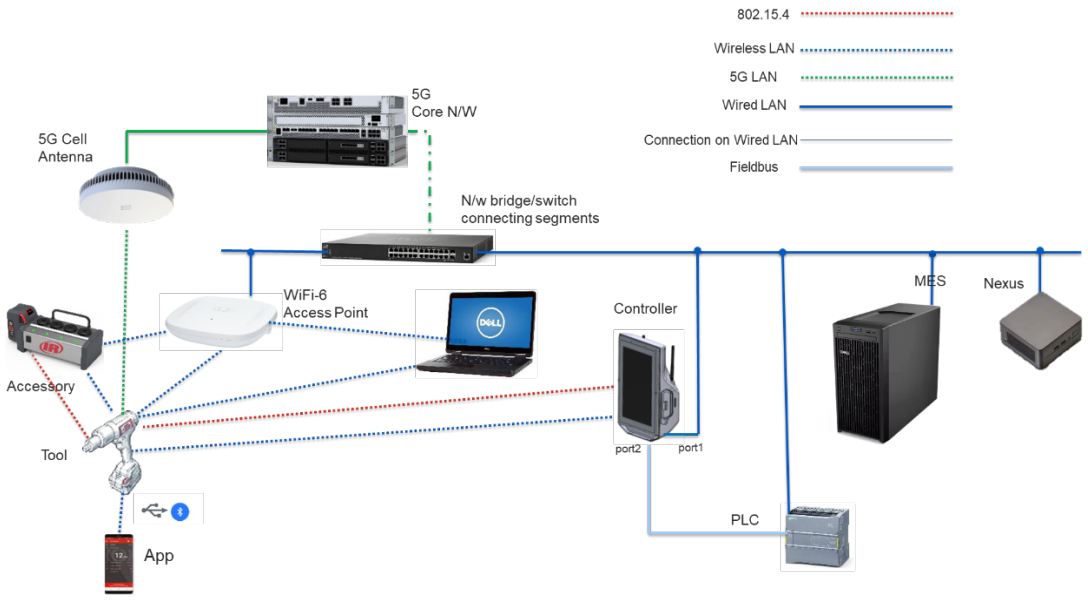

Figure 2.1 Tool Connected Ecosystem

2.2 Hardware/ Software Decomposition

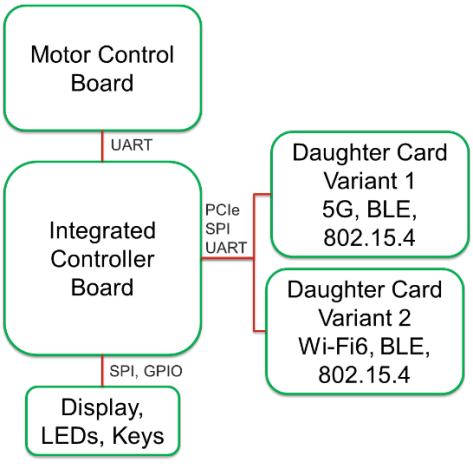

Figure 2.2a Electronics Boards & Interfaces

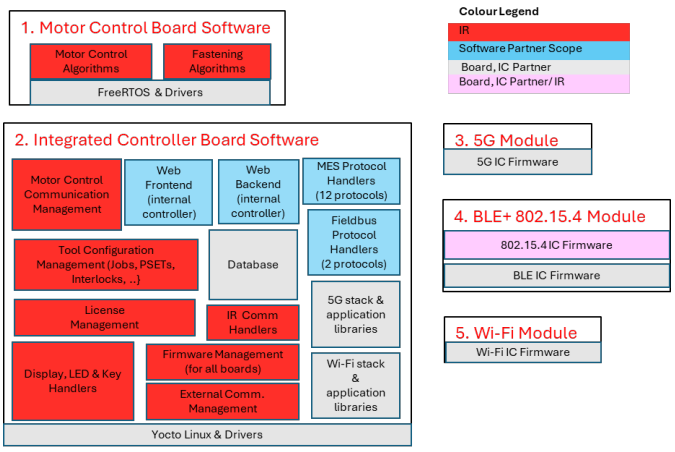

Figure 2.2b Software Decomposition

2.3 Differences between Genesis and RTS2

Both projects will use the same electronics and software. The software algorithms on the Motor Control Board will differ. The software on the Integrated Controller Board will be from the same codebase but will differ in configurations and feature selection. As a result, the features available to the user of the tool will differ.

3 Engagement Scope

The following are the engagements for which the quote is requested.

3.1 Genesis – application software development & test

3.1.1 MES Protocol Handling

Application software to be developed in C++ to run on the Integrated Controller Board, to handle the following MES protocols. Inputs and outputs will be based on TCP with connectivity over Wi-Fi and 5G private LAN. Data will be read from and written to the database.

	MES Protocol	Standard Owner/ Remark
1	PFOP	Atlas Copco/ Reference implementation available in IR controller codebase
2	TOOLSNET	Atlas Copco/ Reference implementation available in IR controller codebase
3	Ford WCS	Ford/ Reference implementation available in IR controller codebase
4	PFCS	Stellantis/ Reference implementation available in IR controller codebase
5	VW-XML	Volkswagen/ Reference implementation available in IR controller codebase
6	FORD-OP	Ford/ Reference implementation available in IR controller codebase
7	EOR DATA OUT	IR/ Reference implementation available in IR controller codebase
9	IR MES	IR/ New
10	GM Common Controller	GM/ New
11	OPCUA	OPC/ New
12	Airbus MQTTS	Airbus/ Reference implementation to be available from another IR project

3.1.2 Web Frontend & Backend

Application software to be developed in Node.JS and Reacts/ Preacts to run on the Integrated Controller Board, to provide a remote user interface to the tool. Through this remote user interface the tool can be programmed and configured with data written to the database. The results of the tool operation can be available on the remote user interface with data from the database.

3.1.3 Fieldbus Protocol Handling

Application software to be developed in C/C++ to run on the Integrated Controller Board, to handle the following protocols. Inputs and outputs will be based on TCP for EthernetIP and on DCP for Profinet. Data will be read from and written to the database. Before development, a feasibility study needs to be conducted to support these two protocols with connectivity over Wi-Fi and 5G private LAN .

	Fieldbus Protocol	Standard Owner/ Remark
1	Profinet	Profibus/ Reference implementation available in IR controller codebase
2	EthernetIP	ODVA/ Reference implementation available in IR controller codebase

3.1.4 Test Hardware

The software shall be built on a Linux system. Upto 5 instances of a simulation platform shall be available for use to test the software developed under this engagement. For MES, simulators shall be available. For Fieldbus, PLCs shall be available.

3.1.5 Offsite/ Onsite Effort

The software can be developed offsite, at the partner premises. Multiple planning, one-roof integration & bug fixing sessions may be needed onsite at IR Bangalore.

3.2 RTS2 – integration & configuration of software on the tool and system testing

As the software evolves incrementally for the Genesis project, the software will be integrated on the various electronics and tested as a system based on an incremental development & integration plan. As defects are raised, they are triaged and fixed in subsequent increments after which regression testing is conducted. This work of integration and test will be conducted by IR for the Genesis project.

3.2.1 RTS2 Software Integration & Test

For RTS2, the same activity needs to be performed in parallel. The scope of the quote for this section is be the integration of software increments, the system testing, defect raising and regression testing.

3.2.2 Test Hardware

As the electronics for the tool evolve, prototypes and engineering builds shall be available. Upto 4 instances of every major revision to hardware shall be available for this engagement.

3.2.3 Offsite/ Onsite Effort

The software will be integrated and tested onsite, at IR Bangalore.

4 Engagement Timeline

4.1 Genesis Timeline

Key Milestone	Proposed Month(s)
Kickoff	April 2026
Prioritized Requirements & Plan Signoff	June 2026
Software Development in Increments	June-Nov 2026
Final software deliverables	Dec 2026

4.2 RTS2 Timeline

Key Milestone	Proposed Month(s)
Kickoff	July 2026
Plan Signoff	July 2026
Software Increment Integration & Test	Aug 2026- Apr 2027
Final Testing Complete	June 2027

5 Source Code, Intellectual Property & Ownership

All artifacts developed under this engagement shall be the intellectual property of Ingersoll Rand and shall be delivered to Ingersoll Rand in source code form with full build instructions.

Appendix A: Terms and Conditions of Purchase for the United States

"Buyer" means the Ingersoll Rand entity identified in the applicable purchase order. "Seller" means the party selling the applicable products or services to Buyer. By selling products or services to Buyer, Seller confirms that the following terms and conditions apply to Buyer's purchases. Any modifications must be in writing and signed by the Buyer. References to "products" include items specifically provided for in the Purchase Agreement (as defined below) or incorporated in services Buyer purchases from Seller.

1. **TERMS AND CONDITIONS OF PURCHASE**. (a) Any products or services Buyer purchases from Seller by electronic, phone, paper or any other form of transmission, are purchased subject to the following: (i) if Seller already has a fully signed purchase agreement currently in effect with Buyer, then the terms of that agreement, together with these terms and conditions of purchase and any other terms and conditions incorporated in the attached or enclosed purchase order and any subsequent purchase orders issued hereunder not in conflict with that agreement, constitute the complete agreement; (ii) if Seller does not already have a fully signed purchase agreement with Buyer, then these terms and conditions of purchase and any other terms and conditions incorporated in the attached or enclosed purchase order and any subsequent purchase orders issued hereunder constitute the complete agreement; and (iii) if Seller already has a signed confidentiality agreement currently in effect with Buyer, then the terms of that agreement control over the terms of Section 9, below. The complete agreement as stated hereinabove shall be referred to as the "Purchase Agreement". No other terms or conditions including, without limitation, Seller's standard printed terms and conditions, whether printed on Seller's proposal, order acknowledgement, invoice or otherwise, will have any application to any purchase between Buyer and Seller unless specifically accepted in writing by Buyer.

All orders submitted by Buyer shall be deemed accepted by Seller upon the first to occur of: (i) Seller's written acceptance of such order, (ii) any conduct by Seller that evidences the existence of a contract between the parties, and (iii) forty-eight (48) hours after Seller's receipt of such order. In the event Seller desires to modify an order, Seller must, prior to acceptance of the order, deliver to Buyer a written notice of proposed modifications. The modified order will not become effective unless and until Buyer notifies Seller in writing that the proposed modifications are acceptable.

Seller may not assign or subcontract its obligations under the Purchase Agreement without the prior written consent of Buyer, and if Seller does so, the assignment or subcontract will be void.

The Purchase Agreement shall be governed by, and interpreted under, the substantive laws of the State of North Carolina, USA, without regard to its conflict of laws provisions or interpretations. The application of the United Nation's Convention on Contracts for the International Sale of Goods (CISG) is expressly excluded. All disputes arising under or in connection with the Purchase Agreement shall be resolved by (i) good-faith negotiations by knowledgeable, responsible representatives of each party who are fully authorized to settle any such dispute, or (ii) in the event such negotiations do not resolve such dispute, binding arbitration held in Charlotte, North Carolina, USA, by a single arbitrator pursuant to the Commercial Arbitration Rules of the American Arbitration Association. Each party shall bear its own costs of these procedures and the parties shall equally split the fees of the arbitration and the arbitrator. Notwithstanding the above, either party shall have the right to seek a temporary restraining order or an injunction related to the purposes of the Purchase Agreement, to compel compliance with confidentiality obligations, or to file suit to compel compliance with this dispute resolution process.

Forecasts. Buyer may provide Seller with forecasts of its future anticipated requirements for products and/or services. Seller acknowledges that any such forecasts, including, without limitation, any forecast of annual volume requirements of a Buyer facility, are for informational purposes only and are based on a number of factors that may change over time. Buyer makes no representation, warranty, guaranty or commitment of any kind or nature, express or implied, regarding any such forecasts, including, without limitation, with respect to the accuracy or completeness of such forecasts.

Spare and Replacement Parts. In return for Buyer agreeing to enter into the Purchase Agreement, Seller grants to Buyer an option during the term of such Purchase Agreement and for ten (10) years thereafter to purchase component parts of any products, including those which become obsolete during the term of such Purchase Agreement, at the lowest price at which Seller sells such parts. Prices for such parts shall be firm, at the last pre-termination price, for the first five (5) years following the termination of such Purchase Agreement or

obsolescence of such product, as applicable, except for and only to the extent changes are required by cost differences in packaging.

If any provision or part of a provision of the Purchase Agreement is found to be illegal, invalid or unenforceable under any applicable law, such provision or part of a provision shall, insofar as it is severable from the remaining terms, be deemed omitted from Purchase Agreement and shall in no way affect the legality, validity or enforceability of the remaining terms.

2. **PRICING; PAYMENT**. (a) Unless otherwise provided elsewhere in the Purchase Agreement, prices are: (i) stated in U.S. dollars; and (ii) not subject to increase for the duration of the Purchase Agreement. No extra charges of any kind will be allowed unless specifically agreed to by Buyer in writing.

Unless prohibited by law, Seller will separately indicate on its invoices any taxes imposed on the sale or delivery of products or services.

Unless otherwise provided elsewhere in the Purchase Agreement, payment terms shall be one hundred five (105) days following the date of Buyer's receipt of conforming invoice and related products and/or services. Buyer may, at its option, make payment by check, bank transfer payable to a designated EFT or wire address. Buyer's part number and order number must appear on all shipping papers, invoices, parcels and containers. Invoices will be submitted by Seller to the location indicated on the order and shall include the order number, part number/product description, unit price, and name of person or party issuing the order. Buyer shall have the right (but no duty) to withhold payment for any amounts in dispute.

Buyer will be responsible for all sales, use, and similar taxes (excluding taxes based on or measured by the net income, net worth or gross receipts of Seller) imposed as a result of the sale of products or services. With notice to Seller, Buyer may pay such taxes directly to the taxing authority where allowed by law. Seller shall remit all taxes paid by Buyer to the appropriate taxing authority. Upon Buyer's request, Seller will provide written evidence that Seller is properly licensed to collect the taxes paid by Buyer.

If the Purchase Agreement obligates Buyer to buy a percentage of its product requirements from Seller, reasonable amounts of product purchased from a third party supplier for purposes of qualifying such products shall be deemed excluded from Buyer's requirements and can be used by Buyer for commercial production and sale. 3. **TRANSPORTATION; DELIVERY**. (a) Delivery dates are firm and TIME IS OF THE ESSENCE WITH RESPECT TO DELIVERY. Seller will promptly notify Buyer in writing if Seller anticipates difficulty in complying with a required delivery date and will use all commercially reasonable efforts to meet the required delivery date. Buyer has no obligation to accept deliveries that are not made on the required delivery date. If Seller fails to meet a required delivery date, Buyer may procure replacement products or services. Seller will be responsible for all costs incurred by Buyer as a result of early or late deliveries. If Seller has to use premium freight, Seller will notify Buyer in writing of the type and monetary value of the premium freight used (for Buyer's records).

Unless otherwise provided elsewhere in the Purchase Agreement, delivery will occur, and title and risk of loss will transfer, when: (i) with respect to product not incorporated into services, upon delivery to and acceptance by, Buyer and (ii) with respect to product incorporated into services, the completed services have been accepted by Buyer.

The products shall be suitably packed and prepared for shipment to secure lowest transportation rates (unless a premium method is specified on the face hereof) and to comply with carrier and packaging regulations, including the International Standard for Phytosanitary Measures for wood used in packaging. Unless expressly agreed to by an authorized representative of Buyer, no charges shall be allowed for packing, crating, freight express, or cartage. Buyer may select the mode of transportation, the routing of, and the carrier for the products. Exceptions to stated routings and terms must be secured from an authorized representative of Buyer, and Seller shall be liable for excess transportation costs resulting from any deviation from Buyer's instructions.

Products shall be delivered by Seller to Buyer's place of business from which the products were ordered, unless otherwise specified in the purchase order. Unless Buyer instructs otherwise, shipments with the same ship to address must be combined for the lowest freight rates. Seller shall not send partial shipments unless authorized. (e) Unless otherwise agreed in writing, all shipments shall be F.O.B. Buyer's destination. The party bearing the risk of loss shall be responsible for providing adequate insurance on shipments.

(f) Buyer's weight and count shall be conclusive, and Buyer shall have no liability for payment for products delivered in excess of the quantity specified herein unless Buyer elects to keep such excess, and then Buyer shall be liable

only for the price thereof and not any incremental freight expenses. Such excess products shall, at Buyer's option, be subject to rejection by Buyer and redelivery to Seller at Seller's expense.

4. **INSPECTION; REJECTION; REVOCATION OF ACCEPTANCE**. (a) Buyer may inspect and test all products and services and all materials, equipment and facilities utilized by Seller in producing products or providing services for Buyer. Seller will maintain an inspection and testing system for the same that is acceptable to Buyer and will keep records of all inspection and testing data and, with respect to products, samples of each lot shipped, for two (2) years after delivery. Unless otherwise agreed by Buyer in writing, Seller will deliver to Buyer a certificate of analysis as to specifications approved by Buyer with respect to each product lot shipped.

(b) After receipt of the products, Buyer shall have a reasonable time, but not less than ten (10) days, in which to inspect and accept or reject the products, and payment for the products shall not constitute acceptance. Buyer reserves the right to reject products not conforming to the Purchase Agreement. Unless specifically agreed otherwise, rejected products shall be returned to Seller for full credit or replacement, at Seller's risk and expense, including transportation costs both ways. Buyer may, at its option, purchase substitute products in lieu of the rejected products, with Seller being responsible for all resulting excess costs, including, without limitation, any increase in the price paid for the products and any expenses to expedite routing of the substitute products. Acceptance by Buyer of part of the products shall not bind Buyer to accept the remainder. Acceptance of all or a part of the products shall not deprive Buyer of the right to revoke acceptance and return any part of the products or the right to make a claim for damages because of the failure of the products to conform to the Purchase Agreement by reason of defects or other breach of warranty or by reason of damage caused by improper packing. Buyer shall not be liable to Seller for failure to accept the products for causes beyond Buyer's reasonable control.

5. **WARRANTIES**. (a) Seller warrants that all products and services will: (i) be in strict accordance with the specifications, samples, drawings or other descriptions approved by Buyer; (ii) be merchantable; (iii) be free from defects in design, quality, material and workmanship; (iv) meet applicable industrial or governmental safety standards; and (v) to the extent that Buyer relies on Seller to specify the products or services, be fit for their intended purpose. Seller further warrants that all services will be performed in accordance with the standards of care and diligence normally practiced by persons performing similar services and in the best workmanlike manner.

Seller further warrants that all products are free of asbestos and all other hazardous substances and that no claim, demand, or notice has been filed nor any proceeding commenced alleging liability of Seller in connection with the use of asbestos and/or any other hazardous substances relating in any way to the manufacture or sale of the products. Seller shall provide a material safety data sheet for each substance containing a toxic substance that is purchased by Buyer from Seller, and Seller shall affix on each container containing toxic substances the chemical name and the appropriate hazard warning for the use and safe handling of the toxic substance. Seller shall provide other material safety data sheets relating to the products upon request.

Seller further warrants that Seller will have title to the products and the right to sell such products at the time of delivery to Buyer, and that all such products shall be new and unused at the time of delivery to Buyer.

The above warranties will be in effect for the longer of: (i) the duration of any warranty provided by Buyer in connection with Buyer's sale of the final product, which durations are publicly available and will be provided by Buyer upon written request and are INCORPORATED HEREIN BY REFERENCE; or (ii) thirty-six (36) months from the date the related final product is first placed into operation. If any products or services fail to conform to the above warranties Seller, at Buyer's option, will: (i) with respect to products, replace or repair the nonconforming products at Seller's cost; (ii) with respect to services, re-perform all services necessary to correct any such nonconformity at Seller's cost; or (iii) refund the purchase price of the nonconforming products or services and any related costs incurred by Buyer. Any replacement products or services also will be subject to the above warranties and warranty period. The warranty period for repaired products will be extended to account for the time lapsed until the repair was completed. If Seller does not replace, repair or re-perform, as applicable, within a reasonable time after notice, Buyer may do so at Seller's expense.

Seller shall also extend to Buyer the warranties or guaranties, if any, given to Seller by any third party manufacturer of component parts and accessories incorporated into the products sold hereunder. Seller agrees to use its best efforts and will cooperate with Buyer in enforcing any claims against such third party manufacturer(s) for defects that may occur.

Recalls and Field Fix Programs. If at any time a governmental agency of any country, state, province or municipality requires Buyer to conduct a product safety recall or a field fix program, or Buyer voluntarily undertakes such an

action, related to the products, Buyer will notify Seller within thirty (30) days of the initiation any such action and Seller shall, at Buyer's option, either repair or replace the related products, and reimburse Buyer for any costs, expenses or damages.

6. **QUANTITY TERMINATION; ORDER CHANGES**. (a) Buyer may, by written notice to Seller, terminate its purchase of any quantity of products or services (i) for convenience, (ii) if Seller fails to complete or deliver any part thereof when required, or (iii) if Seller is in breach of any material term of the Purchase Agreement, including, without limitation, any provision of Sections 8, 9 (or separate confidentiality agreement) or 10 below, immediately prior to the delivery thereof.

If terminating for convenience Seller shall promptly advise Buyer of the quantities of products and raw material on hand or purchased prior to termination and of the most favorable disposition that Seller can make thereof. Seller shall comply with Buyer's instructions regarding disposition of products and raw materials. Seller shall submit to Buyer in writing notice of its intention to submit claims based on such termination within fifteen (15) days from the date of notice of termination, and all such claims shall be made in detail and substantiated by bills, receipts, and similar documents within thirty (30) days thereafter, or such claims shall be waived. Buyer shall pay Seller the order price of finished products accepted by Buyer and the cost to Seller, excluding profits and losses, of work in process and raw materials relating to the order, less the agreed value of any products used or sold by Seller with Buyer's consent. Buyer reserves the right to verify such claims at any reasonable time or times by inspecting and auditing the records, facilities, work, or materials of Seller relating to the order. Buyer will make no payments for finished work, work in process, or raw materials fabricated or procured by Seller unnecessarily in advance or in excess of Buyer's delivery requirements under the order. Notwithstanding the above, payments made under this paragraph shall not exceed the aggregate price specified in the order, less any payments made or to be made. Payment provided under this paragraph shall constitute Buyer's only liability in the event the order is terminated for convenience. To the extent the order covers products normally carried in the inventory of Seller, as distinguished from products specially made to Buyer's specifications, Buyer shall have no liability for any termination of the order, in whole or in part, prior to actual shipment. For any termination for which the notice thereof is sent to Seller after receipt of products by Buyer, liability shall be limited to returning such products and reimbursing Seller the direct cost of handling and transportation.

If termination is due to a failure of completion or delivery or breach of any material term of the Purchase Agreement, no termination charges will apply and Buyer may, in addition to all legal and equitable remedies that may be available to Buyer, procure substitute products or services and Seller will be liable to Buyer for any excess costs incurred by Buyer.

Buyer may at any time, by written notice to Seller, (i) make changes in the drawings, specifications, and delivery schedules and shipping instructions, and/or (ii) increase quantities, under the order. If any such change increases or decreases the cost of performing the order or the time required for its performance, an equitable adjustment in prices and/or delivery schedules shall be agreed between the parties as soon as practicable, but in any event no later than ten (10) days prior to delivery of the products.

7. **TERMINATION OF PURCHASE AGREEMENT**. (a) Buyer or Seller may terminate the Purchase Agreement upon thirty (30) days' prior written notice if the other party breaches any material term thereof provided, however that during such notice period, the party in default may cure its default and thereby abate the termination. In the event Seller has not complied in any respect with Sections 8, 9 (or separate confidentiality agreement) or 10 above, Buyer shall have the right to immediately terminate the Purchase Agreement, without further compensation to the Seller and without Seller's ability to abate the termination. In addition, Seller shall compensate Buyer for any damages suffered by Buyer as a result of Seller's breach of Sections 8, 9 (or separate confidentiality agreement) or 10 above. Buyer may also terminate the Purchase Agreement immediately upon written notice in the event there is a material change in the ownership of Seller or Seller becomes bankrupt or insolvent, suffers a receiver to be appointed, or makes an assignment for the benefit of creditors. After receipt of a notice of termination, the Seller shall immediately: (i) stop work as directed in the notice; (ii) place no further subcontracts or purchase orders for materials, services or facilities, except as necessary to complete the continued portion of the Purchase Agreement; and (iii) terminate all subcontracts to the extent that they relate to the work terminated. Termination of the Purchase Agreement due to Seller's default shall not affect any order that has been dated prior to the date of termination unless otherwise expressly stated by Buyer.

(b) Notwithstanding paragraph 7(a), Seller may only terminate a purchase order after giving Buyer reasonable notice of such termination, as well as an opportunity to identify and set up an alternate supplier.

8. **COMPLIANCE WITH LAWS**. (a) General. Seller warrants and agrees that it, and all products and services supplied to Buyer, will comply with all applicable foreign, United States federal, state and local laws, orders, rules, regulations, guidelines, standards, limitations, controls, prohibitions, or other requirements contained in, issued under, or adopted pursuant to such laws, and not take any action that would subject Buyer to penalties under such laws. Delivery of any products or services shall constitute Seller's representation to Buyer that there has been and will be full compliance with all applicable laws and, at Buyer's request, Seller shall certify in writing its compliance with the foregoing:

Equal Employment Opportunity. **The parties shall abide by the requirements of 41 CFR 60 1.4(a), 60 300.5(a) and 60 741.5(a). These regulations prohibit discrimination against qualified individuals based on their status as protected veterans or individuals with disabilities, and prohibit discrimination against all individuals based on their race, color, religion, sex, sexual orientation, gender identity or national origin. Moreover, these regulations require that covered prime contractors and subcontractors take affirmative action to employ and advance in employment individuals without regard to race, color, religion, sex, national origin, protected veteran status or disability. The parties further agree to comply with the federal labour law obligations outlined in 29 CFR Part 471, Appendix A to Subpart A. THE FOLLOWING PROVISIONS ARE ALSO INCORPORATED HEREIN BY REFERENCE: 41 CFR § 60 4.3(a) and 41 CFR §§ 60 250.5(a).**

From time to time, at Buyer's request, Seller shall provide certificates to Buyer relating to compliance with any applicable legal requirements.

Seller shall adopt and comply with Buyer's Supplier Code of Conduct ("COC"), which is located at: https://www.irco.com/-/media/files/irco/supplier-code-of-conduct/ir-supplier-code-of-conduct.pdf. THE COC IS INCORPORATED HEREIN BY REFERENCE. Additionally, Seller shall take all reasonable steps necessary to ensure that its sub suppliers and subcontractors comply with the COC. The COC may be amended by Buyer from time to time. 9. **CONFIDENTIAL INFORMATION; OWNERSHIP OF DOCUMENTS AND MATERIALS**. (a) "Confidential

Information" means any and all information, in whatever form or format, that Buyer or any of its subsidiaries, or any of their respective officers, directors, employees or agents, discloses in any manner to Seller in connection with the Purchase Agreement, including but not limited to data, technical data, designs, drawings, lists, materials, models, apparatus, sketches, specifications, production or product know-how, and any proprietary information of Buyer's licensors, and any other material or information of a confidential or proprietary nature. Confidential Information shall also include any (i) information relating to an identified or identifiable natural person ("Personal Information"), and (ii) proprietary information of SAP America, Inc. pertaining to licensed R/3 Software and any other enterprise resource planning (ERP) software utilized by Buyer. Confidential Information shall not include information that: (i) is or becomes generally available to the public other than as a result of a disclosure by Seller; (ii) is or becomes available to Seller on a non-confidential basis from a source other than Buyer (provided that such source is not bound by a confidentiality obligation to Buyer); or (iii) is independently developed by Seller without reference to the Confidential Information.

Seller shall, to the same extent and under the same standard of care as it protects its own confidential information but in no event less than a reasonable level of care, treat and handle all Confidential Information in strict confidence and shall not copy, reproduce, reverse engineer, release, disclose or make available, in whole or in part, to any third parties any of the Confidential Information. Seller shall only use Buyer's Confidential Information as instructed by Buyer to complete an order in accordance with and for the duration of the Purchase Agreement. Seller shall restrict disclosure of Confidential Information solely to those of its employees, representatives, agents and subsuppliers who have a need to know for purposes of performance of the Purchase Agreement and shall ensure that each recipient of Confidential Information is aware of and is made subject to substantially similar obligations as in this paragraph 9. All Confidential Information, and all products, inventions, technology or know-how developed with use of Confidential Information or otherwise in connection herewith, is and shall remain the sole property of Buyer (or, where applicable, its licensors), and Seller shall, upon termination of the Purchase Agreement or earlier if so requested by Buyer, promptly return to Buyer all materials containing or reflecting any Confidential Information, or destroy such and so certify to Buyer in writing within five (5) days after receipt of such notice. This paragraph 9 is intended to be interpreted together with the provisions of any other agreements between the parties to provide, to the extent permitted by law, the greatest possible protection for Buyer's confidential information and legitimate business interests.

Seller agrees to use appropriate technical and organizational measures to prevent accidental, unauthorized, or unlawful destruction, modification, disclosure, access, or loss of such Confidential Information (a "Security Breach").

Seller shall immediately inform Buyer of any Security Breach. Seller shall also provide Buyer with a detailed description of the Security Breach, the type of data that was the subject of the Security Breach, the identity of each affected person, and any other information Buyer may request concerning such affected persons and the details of the breach. Seller agrees to take action immediately to investigate the Security Breach and to identify, prevent, and mitigate the effects of any such Security Breach, and to carry out any recovery or other action (e.g., mailing statutory notices) necessary to remedy the Security Breach. The content of any filings, communications, notices, press releases, or reports related to any Security Breach ("Notices") must first be approved by Buyer prior to any publication or communication thereof to any third party. Seller shall pay for or reimburse Buyer for all costs, losses, and expenses relating to any Security Breach, including without limitation, the cost of Notices.

Seller shall comply with and assist Buyer in complying with all applicable laws and regulations pertaining to the processing of Personal Information. Seller shall not transfer Buyer Personal Information internationally without the written permission of Buyer, and any approved transfers shall be pursuant to any applicable transfer requirements. Seller must obtain written permission from Buyer to provide any Buyer Personal Information to any subcontractors. Buyer reserves the right to conduct an on-site verification, with prior written notice, of Seller's compliance with obligation with this paragraph 9 at any time, even after termination of the Purchase Agreement, and Seller agrees to provide access to all concerned facilities, equipment and records necessary to conduct such verification. (e) Seller will not make any announcement or release any information concerning the Purchase Agreement to any other person or entity, including the press or any official body, except as required by law, unless prior written consent is obtained from Buyer.

INTELLECTUAL PROPERTY INFRINGEMENT. Seller represents and warrants that the sale or use of the products or services provided to Buyer will not infringe or contribute to the infringement of any patents, trademarks, or copyrights anywhere in the world. Seller shall protect and indemnify Buyer from and against any loss, cost, damage, or expense arising from infringement or alleged infringement of any patent of the United States or foreign letters patent by any of the products or services, and Seller shall defend or settle at its own expense any suit, action, or proceeding brought against Buyer for such infringement. Furthermore, in the event that Buyer should be enjoined in such suit or proceeding from using any of the products or services, Seller, at Buyer's option, shall promptly either (i) secure termination of the injunction and obtain for Buyer the right to use such products without any obligation or liability; (ii) replace such products with non-infringing goods, all at Seller's expense and to Buyer's satisfaction; or (iii) remove such products at Seller's expense and refund to Buyer the amount paid. The provisions of this paragraph shall not apply to claims, demands, suits, or injunctions directly attributable to products manufactured by Seller in accordance with Buyer's specific instructions, specifications, design, or drawings. Seller shall not assert any of its patents or other intellectual property rights against Buyer or Buyer's affiliates or customers worldwide in connection with any use of products or services provided to Buyer in the production, use, preparation, sale, or delivery of, or other action with respect to, the products or services of Buyer or Buyer's affiliates or customers.

QUALITY. (a) Seller agrees to keep Buyer informed regarding the development of new products and proposed improvements to the products and the development of new processes or improvements to existing processes involved in the manufacturing or performance, as the case may be, of the products and further agrees to provide Buyer adequate support for any new products; provided, however, Seller will not introduce any changes in design, including but not limited to changes in performance, maintenance procedures, interchangeability, reliability, or manufacture compatibility, or manufacturing or performance location, manufacturing process, raw materials or proportions of raw materials used in products delivered to Buyer under the Purchase Agreement unless Seller notifies Buyer in writing of the change at least one hundred eighty (180) days before its implementation and Buyer agrees to the change in writing. Seller will be liable for all losses and damages that Buyer may suffer if Seller does not comply with the requirements of the preceding sentence. At Buyer's request, Seller will provide samples of product produced with the proposed change to test in Buyer's manufacturing process.

Seller will participate in programs implemented by Buyer with respect to quality in manufacturing and delivery of products and services.

Quality Standards. Seller shall comply with the quality standards, which are contained in the Buyer's global supplier quality manual which is available at https://www.irco.com/-/media/files/irco/global-supplier-qualitymanual/global-supplier-quality-manual.pdf, as the manual may be amended by Buyer from time to time (the "Quality Standards"). THE QUALITY STANDARDS ARE INCORPORATED HEREIN BY REFERENCE. Buyer alone shall decide whether Quality Standards are being met. Seller shall maintain and enforce all measures necessary to secure the quality of products and services and the manufacturing process thereof, including but not limited to quality control standards, inspection standards and specifications.

CUSTOMS AND TRADE. (a) In any case where Buyer agrees to be the importer of record, Seller will provide all information needed to effect customs entry into each country into which the products are to be imported. (b) Buyer shall have all rights to drawback of duty or taxes paid by Seller in its own country or in any third country where all or part of the work is executed. Seller waives any interest in or rights to such drawback and agrees to provide, at no cost to Buyer, proof of importation and/or re-exportation as the case may be, satisfactory to Buyer and the customs administration, tax collection agency, or other government agency in any country where taxes or duties are paid, as well as to provide any other supporting documentation to enable Buyer to claim drawback of duties and taxes on products or articles manufactured from products provided under the Purchase Agreement. (c) Seller will accurately indicate the country of origin of the products provided under the Purchase Agreement on the customs invoice and other applicable documentation. Seller will provide certificates of origin relating to such products within the meaning of the rules of origin of the NAFTA preferential duty provisions and execute such other documents as may be necessary for Buyer to claim duty preference under any applicable programs.

SERVICES/LIENS; SITE RULES; INSURANCE. (a) Seller will obtain from all of its subcontractors waivers and releases of all liens which may be imposed by them against the products provided under the Purchase Agreement or Buyer's premises or the improvements thereon, and Seller will defend, indemnify, and hold harmless Buyer with respect thereto. Buyer has the right to withhold payment for any services until such time as Seller has provided Buyer with signed copies of all required waivers and lien releases.

Seller will conform strictly to all of Buyer's site rules and regulations when performing services on Buyer's premises, including but not limited to Buyer's requirements for background screening contingent workers. It is Seller's obligation to obtain a copy of Buyer's site rules.

In addition to any insurance requirements set forth in a fully signed purchase agreement currently in effect between Seller and Buyer, Seller shall maintain in force standard liability insurance of the type and in such amounts as reasonably satisfactory to Buyer and shall furnish Buyer, at any time upon request, with a certificate of insurance that shall provide for Buyer to receive at least 30 days' prior written notice of modification, non-renewal, cancellation or termination.

It is agreed that Seller, in rendering any services on Buyer's premises, will be an independent contractor and that neither Seller nor any principal, partner, agent or employee of Seller is the legal representative of Buyer for any purpose whatsoever and has no right or authority to assume or create, by action, in writing or otherwise, any obligation of any kind, express or implied, in the name of or on behalf of Buyer and neither Seller nor any principal, agent or employee of Seller shall be entitled to or be eligible to participate in any benefit program extended by Buyer to its employees.

All Seller's employees providing services under the Purchase Agreement must be authorized to work in the jurisdiction where the services are performed.

INDEMNIFICATION. Seller will fully defend, indemnify, hold harmless and reimburse Buyer, its officers, directors, shareholders, affiliates, subsidiaries, employees, agents, customers and assigns from and against all claims, suits, actions, proceedings, damages, losses and expenses, including attorneys' fees, arising out of, related to, or resulting from: (a) any breach of any representation, warranty, certification, covenant or agreement made by Seller in the Purchase Agreement; (b) any negligence or willful misconduct of Seller or its agents or subcontractors in connection with performance under the Purchase Agreement; (c) any litigation, proceeding or claim by any third party relating to the obligations of Seller under the Purchase Agreement; (d) any violation of law by Seller, its employees, agents, affiliates, contractors or subcontractors and (e) Seller's use, control, ownership, or operation of its business and facilities, except to the extent caused by the negligence of Buyer. Seller agrees to include this Indemnification provision in any subcontracts issued hereunder.

BUYER'S PROPERTY. (a) All property of Buyer furnished or made available to Seller for performance of work under the order, including, but not limited to, materials, tools, tooling, special tooling (as defined below), equipment, and replacements thereof, shall remain the property of Buyer, shall be segregated from Seller's property and be individually marked and identified as Buyer's property and shall be promptly returned to Buyer at its written request, or upon termination, cancellation, or completion of the order. Seller shall maintain and keep up-to-date a list of all such property, and shall furnish the list to Buyer upon request. Such property, including, without limitation, special tooling, shall be used exclusively for performance under the order and Seller agrees to: (i) maintain such property in good condition and assume all risks and liability for loss or damage thereto excepting normal wear; (ii) purchase insurance to cover the replacement cost thereof, with the proceeds payable to Buyer, and furnish Buyer evidence of such insurance upon request; (iii) permit inspection of such property by Buyer during normal business hours; (iv) at

Buyer's request, furnish detailed statements of such inventory; and (v) fully cooperate and assist Buyer in any effort by it to obtain possession of such property through court proceedings or otherwise.

Before commencing work under the order, Seller agrees to obtain Buyer's prior written approval for the purchase of any special tooling, describing in detail in such request each item and its price. Upon completion, cancellation, or termination of the work for which such special tooling is required, Seller shall prepare a list of products for which special tooling has been used, together with a detailed listing in a form acceptable to Buyer of the special tooling, including each item's unamortized cost and fair market value, and shall upon request by Buyer, in its sole discretion, transfer title to the special tooling to Buyer, by written assignment, free and clear of liens and encumbrances, in exchange for the lesser of the tooling's unamortized cost or fair market value, and shall transfer possession of the special tooling to Buyer, except that Buyer shall be under no obligation to purchase such special tooling. Buyer reserves the right to dispose of special tooling without taking possession thereof and to receive any salvage or resale revenues resulting therefrom. Seller agrees that Buyer shall have the right to enter Seller's premises for the purpose of obtaining possession of any special tooling.

As used herein, "special tooling" means all patterns, dies, fixtures, molds, jigs, models, gauges, inspection devices, special cutting tools, special test devices, drawings, and templates, and any replacements thereof, which, prior to the date of the order, were not owned or used by Seller and which Seller has been or will be required to acquire and use solely for the purpose of furnishing products under the order. Special tooling does not include tools, capital items, or property owned by or furnished by Buyer.

SET-OFF. Buyer may set off any amount owing at any time from Seller to Buyer or any of its affiliated companies against any amount payable at any time by Buyer under the Purchase Agreement.

FORCE MAJEURE. (a) Any non-performance or delay in performance of any obligation of Seller or Buyer under the Purchase Agreement will be excused to the extent such failure or non-performance is caused by "Force Majeure." "Force Majeure" means any cause preventing performance of an obligation under the Purchase Agreement which is beyond the reasonable control of the Seller or Buyer, and which, by the exercise of due diligence, could not be overcome, including without limitation, fire, flood, sabotage, shipwreck, embargo, explosion, accident, riot, epidemic, pandemic, acts of a governmental authority, and acts of God. In no event shall Seller's ability to sell products or services at a better price or Seller's economic hardship in buying raw materials necessary to manufacture products at a commercially reasonable price constitute Force Majeure.

If Buyer or Seller is affected by Force Majeure, it will (i) promptly provide notice to the other party, explaining the full particulars and the expected duration of the Force Majeure and (ii) use its best efforts to remedy the interruption or delay if it is reasonably capable of being remedied. In the event of Force Majeure, deliveries or acceptance of deliveries of products or services which have been suspended will not be required to be made up on the resumption of performance and, to the extent not otherwise permitted under the Purchase Agreement, Buyer will have the right to purchase products and services from other sources during the period of Force Majeure. If a Force Majeure extends for more than sixty (60) days, the Purchase Agreement may be terminated upon written notice by the party not declaring Force Majeure without any liability on its part.

If a Force Majeure compels Seller to allocate deliveries of products or services, Seller will make such allocation in a manner that ensures Buyer at least the same proportion of the Seller's total output as was purchased by Buyer prior to the Force Majeure. Seller will use best efforts to source products or other items, at Seller's expense, from its own or its affiliates' global operations or the market in order to meet Buyer's required delivery dates.

ACCESS AND AUDIT. In order to assess Seller's work quality and compliance with the Purchase Agreement, Seller will permit Buyer reasonable access to (i) all locations where work is performed in connection with the products or services provided for in the Purchase Agreement, and (ii) Seller's books and records relating to the Purchase Agreement.

INTELLECTUAL PROPERTY RIGHTS. Seller hereby assigns and agrees to assign to Buyer and not otherwise to make use of any invention, improvement, or discovery, whether or not patentable or protected by copyright, which is (i) created, conceived or reduced to practice in performance of the work or provision of the products or services under the order by any employee of Seller or any person working under Seller's direction, (ii) embodied in any products delivered under the order, or (iii) created using or derived from Buyer's Confidential Information. Seller shall execute and cause to be executed such documents, render such assistance, and take such other actions as Buyer may reasonably request to assign, apply for, register, perfect, confirm, and protect Buyer's intellectual property rights

under this section. Seller shall be solely responsible for any compensation payable, by law or by contract, if any, to individual inventors of Seller.

NON-WAIVER; CUMULATIVE REMEDIES. The failure of Buyer to insist upon strict performance of any terms and conditions hereof, failure or delay to exercise any rights or remedies provided herein or by law, failure to properly notify Seller in the event of breach, the acceptance of or payment for any products, or approval of design, shall not release Seller from any of the warranties or obligations and shall not be deemed a waiver of any right of Buyer to insist upon strict performance or of any of its rights or remedies as to the products or as to any prior or subsequent default, nor shall any purported oral modification or rescission of the order by Buyer operate as a waiver of any of the terms hereof. Any right or remedy of Buyer provided herein is in addition to Buyer's other rights and remedies provided herein or by law.

End of Document