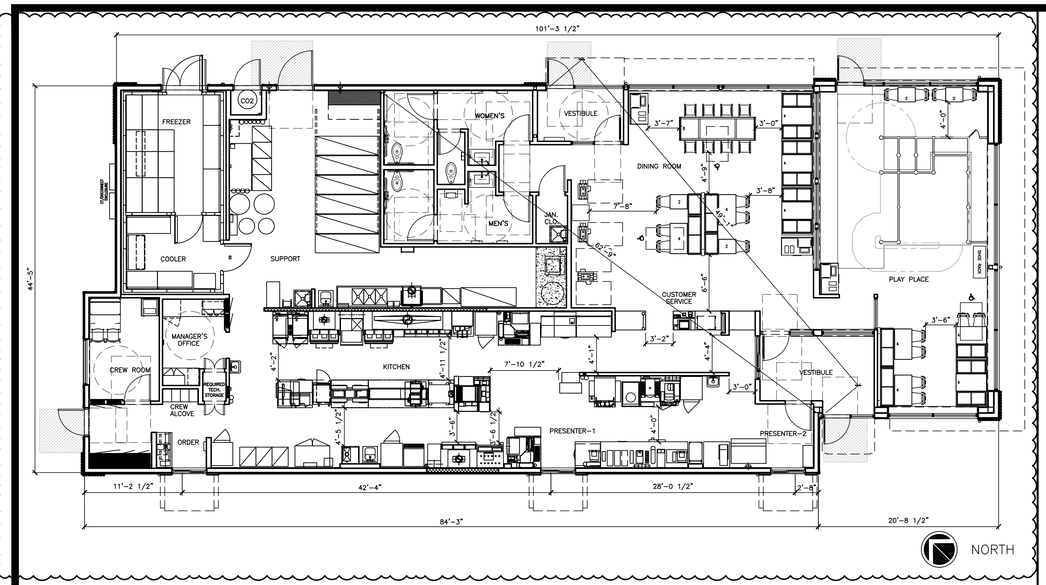

4584-WW PLAN

52 SEATS (3 ACCESSIBLE SEATS) 2

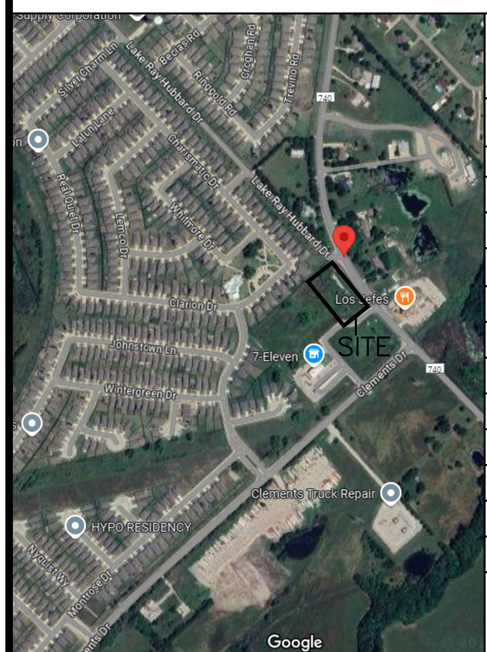

OCCUPANCY ALLOWANCE:

2024 INTERNATIONAL BUILDING CODE

TABLE 1004.5
MAXIMUM FLOOR AREA ALLOWANCES PER OCCUPANT

FUNCTION OF SPACE	ALLOWANCE	AREA	OCCUPANTS
ACCESSORY STORAGE AREAS, MECHANICAL EQUIPMENT ROOM	300 GROSS	570 SF	2
ASSEMBLY WITH FIXED SEATS	SEE PLAN	–	2 52
ASSEMBLY W/OUT FIXED SEATS STANDING SPACE	5 NET	195 SF	32
BUSINESS AREAS	150 GROSS	64 SF	1
KITCHEN, COMMERCIAL (OCCUPANT LOAD FOR FULL STAFF)	200 GROSS	1,213	7
–	–	–	–
–	–	–	–
–	–	–	–
–	–	–	–
–	–	–	–
TOTAL OCCUPANCY ALLOWANCE			2 94

EGRESS INFORMATION

SEE SHEET R1.2 FOR EXITING/EGRESS PLAN

MAX ACCESS TRAVEL DISTANCE 2
LENGTH OF MAX OVERALL DIAGONAL DIMENSION: 62'-9"
MIN REQUIRED ACCESS TRAVEL DISTANCE: 30'-4-1/2"
PROVIDED ACCESS TRAVEL DISTANCE: 49'-1" 2

MEANS OF EGRESS SIZING
(OCCUPANT LOAD) x (0.2 INCH PER OCCUPANT)
MIN EGRESS WIDTH = 94 x 0.2 = 18.8" 2

EXIT DOOR SIZE REQUIRED: 32" MINIMUM
EXIT DOOR SIZE PROVIDED: 36"

TABLE 1006.3.3 – EGRESS BASED ON OCCUPANT LOAD
NUMBER OF EXITS REQUIRED: 2
NUMBER OF EXITS PROVIDED: 5 2

2024 4584-WW BUILDING BB20 DALLAS FIELD OFFICE

BUILDING INFORMATION:

ADDRESS:

STATE SITE CODE: 042-3591
STREET ADDRESS: 15451 FM 460
CITY: FORNEY
COUNTY: KAUFMAN
STATE: TEXAS

STRUCTURE:

WOOD LOAD BEARING WALLS, WOOD ROOF FRAMING

UTILITIES:

ELECTRIC GRILLS & ELECTRIC FRYERS
ELECTRIC HVAC & ELECTRIC WATER HEATER

BUILDING CODE:

BUILDING CODE EDITION:	2024 INTERNATIONAL BUILDING CODE (WITH KAUFMAN COUNTY AMENDMENTS)
MECHANICAL CODE EDITION:	2021 INTERNATIONAL MECHANICAL CODE
ELECTRICAL CODE EDITION:	2020 NATIONAL ELECTRICAL CODE
PLUMBING CODE EDITION:	2021 INTERNATIONAL PLUMBING CODE
ENERGY CODE EDITION:	2021 INTERNATIONAL ENERGY CONSERVATION CODE
FIRE/LIFE SAFETY CODE EDITION:	2024 INTERNATIONAL FIRE CODE (WITH KAUFMAN COUNTY AMENDMENTS)
FUEL/GAS CODE EDITION:	2021 INTERNATIONAL FUEL/GAS CODE
HEALTH CODE EDITION:	KAUFMAN COUNTY PUBLIC HEALTH CODE
ACCESSIBILITY CODE EDITION:	2017 ICC A117.1 & 2012 TEXAS ACCESSIBILITY STANDARDS

BUILDING DATA:

OCCUPANCY CLASSIFICATION: ASSEMBLY (USE GROUP A2)
CONSTRUCTION TYPE: VB

TABLE 504.3 – ALLOWABLE BUILDING HEIGHT ABOVE GRADE PLANE
ALLOWABLE MAX BUILDING HEIGHT: 40'-0" (NON-SPRINKLERED)
PROVIDED BUILDING HEIGHT: 21'-7" (MAIN BLDG. PARAPET) 2

TABLE 504.4 – ALLOWABLE NUMBER OF STORIES ABOVE GRADE PLANE
ALLOWABLE MAX NUMBER OF STORIES: 1 (NON-SPRINKLERED)
PROVIDED NUMBER OF STORIES: 1

TABLE 506.02 – ALLOWABLE AREA FACTOR
REQUIRED BUILDING AREA: 6,000 GROSS S.F. (NON-SPRINKLERED)
PROVIDED GROSS BUILDING AREA: 4,504 GROSS S.F.
PROVIDED FLOOR AREA, GROSS: 4,259 NET S.F. 2
SEE SHEET R1.0 FOR SQUARE FOOTAGE CALCULATIONS

FIRE-RESISTANCE RATING (HRS) FOR BUILDING ELEMENTS – TABLE 601 & 705.5
REQUIRED: 0HR
PROVIDED: 0HR

FIRE SEPARATION DISTANCE: X ≥ 30 (FT.)

DESIGN LOADS:

GROUND SNOW LOAD:	REFERENCE SHEET S4.0
WIND SPEED:	REFERENCE SHEET S4.0
SEISMIC DESIGN CATEGORY:	REFERENCE SHEET S4.0
SOIL BEARING CAPACITIES:	REFERENCE SHEET S4.0

LIFE SAFETY SYSTEM:

EMERGENCY LIGHTING:	X YES	___ NO
EXIT SIGNS:	X YES	___ NO
FIRE ALARM:	___ YES	X NO
DUCT SMOKE DETECTORS W/ AUDIBLE/VISIBLE DEVICE:	X YES	___ NO
FIRE SPRINKLERS:	___ YES	X NO
SPRINKLER FLOW/TAMPER SWITCH W/ AUDIBLE/VISIBLE DEVICE:	___ YES	X NO
CO2 DETECTION SYSTEM W/ AUDIBLE/VISIBLE DEVICE:	X YES	___ NO
PANIC HARDWARE:	X YES	___ NO

DESIGNER OF RECORD:

DISCIPLINE:	NAME:	EMAIL:	PHONE #:
ARCHITECT:	JAW Architects Inc.	jeramy@jaw-arch.com	817-705-3387
STRUCTURAL:	Rubix Consultants	Contact Architect	Contact Architect
MECHANICAL:	Robert D. Anderson	Contact Architect	Contact Architect
PLUMBING:	Robert D. Anderson	Contact Architect	Contact Architect
ELECTRICAL:	Robert D. Anderson	Contact Architect	Contact Architect

CONSTRUCTION PROJECT MANAGER:

DISCIPLINE:	NAME:	EMAIL:	PHONE #:
MANAGER:	Jim Lyon	jim.lyon@us.mcd.com	Contact Architect

REVISIONS

DRAWING INDEX

	1	2	3	4	5	6	7
GENERAL							
GN1.0 Cover Sheet	●	●					
GN1.1 General Notes	●						
REFERENCE							
DT1.0 Drive-Thru Plan & Details							
R1.0 Square Footage Calculations	●	●					
R1.1 Occupancy Count Plan	●	●					
R1.2 Exiting/Egress Plan	●	●					
R1.3 Seating Plan	●	●					
R1.4 IP-CCTV Plan	●	●					
R1.5 Life Safety Plan	●	●					
R1.6 Bulk Oil Tank Details	●						
R1.7 Bulk Oil Tank Details	●						
ARCHITECTURAL							
A1.0 Floor Plan-Dimensioned	●	●					
A1.1 Floor Plan- Noted	●	●					
A1.2 Reflected Ceiling Plan	●	●					
A1.3 Roof Plan	●	●					
A2.0 Elevations	●	●					
A2.1 Elevations	●	●					
A3.1 Service Pod Details	●						
A4.0 Enlarged Restroom Plan & Details	●	●					
A4.1 Enlarged Plan Details		●					
A5.0 Wall Sections & Details	●						
A5.1 Wall Sections & Details	●						
A5.2 Wall Sections & Details 2	●	●					
A5.3 Wall Sections & Details		●					
A5.4 Wall Sections & Details		●					
A6.0 Door & Hardware Schedules	●	●					
A6.1 Finish Schedules	●	●					
A7.0 Dumpster Enclosure Plans		●					
A7.1 Dumpster Enclosure Details	●						
STRUCTURAL							
S1.0 Foundation Plan	●	●					
S1.2 Roof Framing Plan	●	●					
S2.0 Foundation Sections 2							
S2.1 Foundation Sections		●					
S3.0 Framing Sections		●					
S3.1 Steel Details		●					
S3.2 Framing Details	●	●					
S3.3 Site Structural Details							
S3.4 Site Structural Details							
S3.5 Trash Enclosure Structural Details		●					
S3.6 PlayPlace Sections		●					
S3.7 Steel Details 2		●					
S4.0 General Notes	●						
MECHANICAL							
M1.0 Mechanical Roof Plan	●	●					
M1.2 Ductwork Plan	●	●					
M1.4 Refrigerant & Gas Piping Plan	●	●					
M2.0 Exhaust Hoods							
M3.0 Mechanical Details	●	●					
M4.0 General Notes	●	●					
M4.1 Mechanical Schedules	●	●					
PLUMBING							
P1.0 Domestic Water Piping	●	●					
P1.2 Waste Vent & Storm Piping Plan	●	●					
P1.3 Underground Plumbing Plan	●	●					
P1.4 Underground Rough-in	●	●					
P1.6 Overhead Rough-in	●	●					
P2.0 Domestic Water Isometric							
P2.1 Waste & Vent Isometric	●						
P2.2 Storm Isometric	●						
P3.0 Details	●						
P4.0 General Notes							
P4.1 Schedules	●						
ELECTRICAL							
E1.0 POS Electrical Riser Diagram	●	●					
E1.1 Rough In Floor Plan	●	●					
E2.0 Lighting Plan & Schedule	●	●					
E2.1 Electrical Roof Plan	●	●					
E3.0 Electrical Schedule	●						
E3.1 Electrical & Lighting Notes	●						
E3.2 Interlock Diagrams							
E4.0 Wiring Details							
E4.1 Lighting Controls		●					
E4.2 Utilities Distribution	●	●					
KITCHEN EQUIPMENT							
K1.0 Kitchen Cover Sheet	●	●					
K2.0 Kitchen Equipment Plan	●	●					
K2.1 Kitchen Equipment Schedule	●						

REV	DATE	DESCRIPTION	BY
1	04/08/2025	COUNTY COMMENTS, MCD QC COMMENTS, & UTILITY COORDINATION	
2	05/09/2025	PLAYPLACE ADDITION	

REGISTERED ARCHITECT JEREMY WILLIAMS 19926 STATE OF TEXAS

PREPARED BY:
JAW Architects, Inc.
Jeremy Williams, Architect
Phone: 817.705.3387
Email: jeremy@jaw-arch.com

© 2025 McDonald's USA, LLC

PREPARED FOR:
McDonald's USA, LLC

These drawings and specifications are the confidential and proprietary property of McDonald's USA, LLC and shall not be used or reproduced without written authorization. The contract documents were prepared for use on this specific site in conjunction with its issue date and are not suitable for use on any other project or at any other location. These drawings for reference or example on another project requires the services of properly licensed architects and engineers. Reproduction of the contract documents for reuse on another project is not authorized.

DRAWN BY: JAW
STD ISSUE DATE 2024
REVIEWED BY JAW
DATE ISSUED 10/11/2024

TITLE: 2024 STANDARD BUILDING – BB20
4584-WOOD/WOOD

DESCRIPTION:
WOOD BEARING WALLS WITH HARDIE SIDING
WOOD ROOF TRUSS FRAMING
EFS/BATTEN/METAL/HARDIE SIDING EXTERIOR FINISHES

SITE ID: 042-3591
SITE ADDRESS: NWC OF FM 460 & FM 740, FORNEY TEXAS

JAWA 24-0151

SHEET NO. GN1.0
COVER

GENERAL NOTES

1. ALL WORK SHALL BE IN COMPLIANCE WITH APPLICABLE FEDERAL, STATE AND LOCAL BUILDING CODES, REGULATIONS, ORDINANCES AND STANDARDS INCLUDING ADA AND OR OTHER HANDICAP ACCESSIBILITY CODES.
2. GEN.ERAL CONTRACTOR IS RESPONSIBLE FOR COORDINATING WITH THE OWNER'S VENDORS REGARDING SCHEDULING ON SITE DURING CONSTRUCTION AND SEQUENCING OF THE WORK.
3. THE CONSTRUCTION NOTES AND DRAWINGS ARE SUPPLIED TO ILLUSTRATE THE DESIGN INTENT AND GENERAL TYPE OF CONSTRUCTION DESIRED AND ARE INTENDED TO IMPLY THE FINEST QUALITY OF CONSTRUCTION, MATERIAL AND WORKMANSHIP THROUGHOUT.
4. THE DRAWINGS ARE NOT TO BE SCALED. FOR INFORMATION CONCERNING EXISTING CONDITIONS, ETC., VERIFICATION MUST BE DONE IN THE FIELD. LARGE SCALE DRAWINGS HAVE PRECEDENCE OVER SMALL SCALE DRAWINGS.
5. PRIOR TO COMMENCEMENT OF ANY CONSTRUCTION, CONTRACTOR SHALL VERIFY EXISTENCE AND LOCATION OF ALL EXISTING ABOVE AND BELOW GRADE, UTILITIES, INCLUDING SANITARY SEWER, STORM SEWER, WATER, GAS, ELECTRICAL, TELEPHONE, ETC. ANY DISCREPANCIES IN UTILITY LOCATIONS SHALL BE BROUGHT TO THE IMMEDIATE ATTENTION OF THE ARCHITECT.
6. GENERAL CONTRACTOR SHALL BE RESPONSIBLE FOR VERIFICATION OF ALL BUILDING DIMENSIONS PRIOR TO BEGINNING CONSTRUCTION AND SHALL IMMEDIATELY NOTIFY THE ARCHITECT OF ANY VARIANCE OR DISCREPANCY AFFECTING NEW CONSTRUCTION PRIOR TO PROCEEDING WITH WORK.
7. CONTRACTOR SHALL PROVIDE ALL NECESSARY BLOCKING IN WALLS FOR SUPPORT OF ALL EQUIPMENT, SHELVING, ACCESSORIES, SIGNAGE, AND OTHER DEVICES REQUIRED.
8. ALL PENETRATIONS SHALL RECEIVE CAULKING TO SEAL ANY TYPE OF ENERGY LOSS.
9. THE CONTRACTOR SHALL VERIFY AND COORDINATE ALL APPLICABLE DIMENSIONS OF FIXTURES AND EQUIPMENT SUPPLIED AND/OR INSTALLED BY OTHERS.
10. UPON COMPLETION OF PROJECT, G.C. TO OBTAIN ALL FINAL INSPECTIONS AS REQUIRED BY LOCAL JURISDICTIONS AND FURNISH OWNER WITH EVIDENCE OF ALL SUCH INSPECTIONS AND CERTIFICATES OF OCCUPANCY.
11. SIGNS, UNLESS NOTED OTHERWISE, ARE PROVIDED BY OWNER'S SIGN CONTRACTOR. OWNER'S SIGN VENDOR WILL PROVIDE MONUMENT SIGN BASE (CONCRETE, STONE, BRICK, ETC.) IF PROJECT REQUIRES DECORATIVE BASE. SEE SHEET L-1 TO VERIFY IF REQUIRED. GENERAL CONTRACTOR TO PROVIDE ROUGH-IN & FINAL CONNECTION AND BRAILLE EXIT SIGN.
12. GENERAL CONTRACTOR TO PROVIDE FOUR (4) 30 YARD DUMPSTERS DURING McDONALD RETAIL MOVE-IN.
13. GENERAL CONTRACTOR SHALL PROVIDE ONE SKILLED LABORER FOR ONE WEEK DURING McDONALD RETAIL MOVE-IN. (40 HOURS)
14. GENERAL CONTRACTOR SHALL BE RESPONSIBLE FOR SET-UP AND COORDINATION OF ALL THE UTILITY SERVICES FOR THE PROJECT.
15. ALL EXTERIOR FLOOR PLAN DIMENSIONS ARE TO EXTERIOR FACE OF FOUNDATION UNLESS OTHERWISE NOTED. ALL INTERIOR FLOOR PLAN DIMENSIONS ARE TO FACE OF INTERIOR WALL BOARD UNLESS OTHERWISE NOTED.
16. FINAL KEYING TO BE COORDINATED WITH McDONALD FACILITY MANAGER AND PAID FOR BY McDONALD.
17. REFER TO "PROJECT MANUAL" FOR ALL OTHER INSTRUCTIONS & DIRECTIVES NOT SHOWN IN DRAWINGS. IF THERE IS A CONFLICT BETWEEN THE DRAWINGS AND PROJECT MANUAL, NOTIFY THE AREA CONSTRUCTION MANAGER FOR RESOLUTION.

ABBREVIATIONS

GENERAL ABBREVIATIONS

A	ANNEALED	INSUL	INSULATION
AC	AIR CONDITIONING	MAX	MAXIMUM
ACT	ACOUSTIC CEILING TILE	MECH	MECHANICAL
AFF	ABOVE FINISH FLOOR	MFR	MANUFACTURER
AHU	AIR HANDLING UNIT	MIN	MINIMUM
AL	ALUMINUM	MO	MASONRY OPENING
ASPH	ASPHALT	MR	MOISTURE RESISTANT
CJ	CONTROL JOINT	MTL	METAL
CLNG	CEILING	NA	NOT APPLICABLE
CMU	CONCRETE MASONRY UNIT	NIC	NOT IN CONTRACT
COL	COLUMN	NOM	NOMINAL
CONC	CONCRETE	NTS	NOT TO SCALE
CONT	CONTINUOUS	OC	ON CENTER
CP	CONCRETE PAD	OPP	OPPOSITE
CT	CERAMIC TILE	OPT	OPTIONAL
CL	CENTERLINE	PAR	PARTIAL
DBL	DOUBLE	PF	PRE-FABRICATED
DF	DRINKING FOUNTAIN	PSF	POUNDS PER SQUARE FOOT
DIA	DIAMETER	PT	PRESSURE TREATED
DIM	DIMENSION	PTD	PAINTED
DN	DOWN	QT	QUARRY TILE
DS	DOWNSPOUT	R	RADIUS
EA	EACH	REBAR	REINFORCING BAR
EJ	EXPANSION JOINT	REF	REFERENCE
ELEC	ELECTRICAL	REQD.	REQUIRED
ELEV	ELEVATION	RO	ROUGH OPENING
EQ	EQUAL	SB	SPLASHBLOCK
EXIST	EXISTING	SIM	SIMILAR
FD	FLOOR DRAIN	SPEC	SPECIFICATION
FE	FIRE EXTINGUISHER	SS	STAINLESS STEEL
FEC	FIRE EXTINGUISHER CABINET	STL	STEEL
FF	FINISH FLOOR	STOR	STORAGE
FR	FIRE RATED	SUSP	SUSPENDED
FRP	FIBERGLASS REINFORCED PLASTIC	T	TEMPERED
GALV	GALVANIZED	TYP	TYPICAL
GYP BD	GYPSUM BOARD	UNO	UNLESS NOTED OTHERWISE
HC	HANDICAP	VCT	VINYL COMPOSITION TILE
HDW	HARDWARE	VERT	VERTICAL
HM	HOLLOW METAL	WD	WOOD
HT	HEIGHT	WP	WATERPROOF
HVAC	HEATING, VENTILATION, AIR CONDITIONING	WWF	WELDED WIRE FABRIC

McDONALD'S ABBREVIATIONS

AP	ALPOLIC METAL PANEL	LAM	LAMINATE
BM	BRAKE METAL	LE	ACCENT LIGHTING
C	ALUMINUM CANOPY	LP	LOW POINT
CG	CORNER GUARD	LL	LEVEL LANDING
CT	WALL TILE	MACHINE	
D#	DECOR ELEMENT OR FINISH	MANAGER	
DEVICE		MF	METAL FASCIA
DMB	DIGITAL MENU BOARD	MS	MOP SINK
DS	DROP SOFFIT	PB	PIPE BOLLARD
D/T	DRIVE-THRU	PT	RMHC COIN COLLECTOR
FB	FILL BOX	RL	ROOF LADDER
F/C	FREEZER/COOLER	ROOM	
GC	GENERAL CONTRACTOR	S	McDONALD'S SIGNAGE
HP	HIGH POINT	SCH	SCHLUTER
KIOSK		UN	ALUMINUM CANOPY UNDERSCORE
L	LIGHT FIXTURE		

SYMBOL LEGEND:

6 / A4.0	SECTION TAG
5 / A6.0	DETAIL TAG
T/ SLAB ELEV. 0'-0"	ELEVATION TAG
6 / A4.0 — DETAIL 1 1/2"=1'-0"	DRAWING TITLE; DETAIL NUMBER
7	DOOR TAG
DINING ROOM 103	ROOM NAME & NUMBER
A	PARTITION TAG

REV	DATE	DESCRIPTION	BY
1	04/08/2025	COUNTY COMMENTS, MUD OC COMMENTS, & UTILITY COORDINATION	

REGISTERED ARCHITECT JEREMY WILLIAMS 21926 STATE OF TEXAS

PREPARED BY:
JAW Architects, Inc.
Jeremy Williams, Architect
Phone: 817-705-3387
Email: jeremy@jaw-arch.com

© 2025 McDonald's USA, LLC

PREPARED FOR: McDonald's USA, LLC

These drawings and specifications are the confidential and proprietary property of McDonald's USA, LLC and shall not be copied or reproduced without written authorization. The contract documents were prepared for use on this specific site in conjunction with its issue date and are not to be used for any other purpose or at any other location. Use of these drawings for reference or example on another project requires the services of properly licensed architects and engineers. Reproduction of the contract documents for reuse on another project is not authorized.

DRAWN BY	JAW
STD ISSUE DATE	2024
REVIEWED BY	JAW
DATE ISSUED	10/11/2024

TITLE: 2024 STANDARD BUILDING – BB20 4584-WOOD/WOOD

DESCRIPTION: WOOD BEARING WALLS WITH HARDIE SIDING; WOOD ROOF TRUSS FRAMING; EFS/BATTEN/METAL/HARDIE SIDING EXTERIOR FINISHES

SITE ID: 042-3591

SITE ADDRESS: NWC OF FM 460 & FM 740, FORNEY TEXAS

SHEET NO.: JAWA 24-0151 GN1.1

GENERAL NOTES

THE LAYOUT OF THE DRIVE-THRU LANES SHOWN IN THIS DETAIL ILLUSTRATES DRIVE-THRU DESIGN PRINCIPLES.

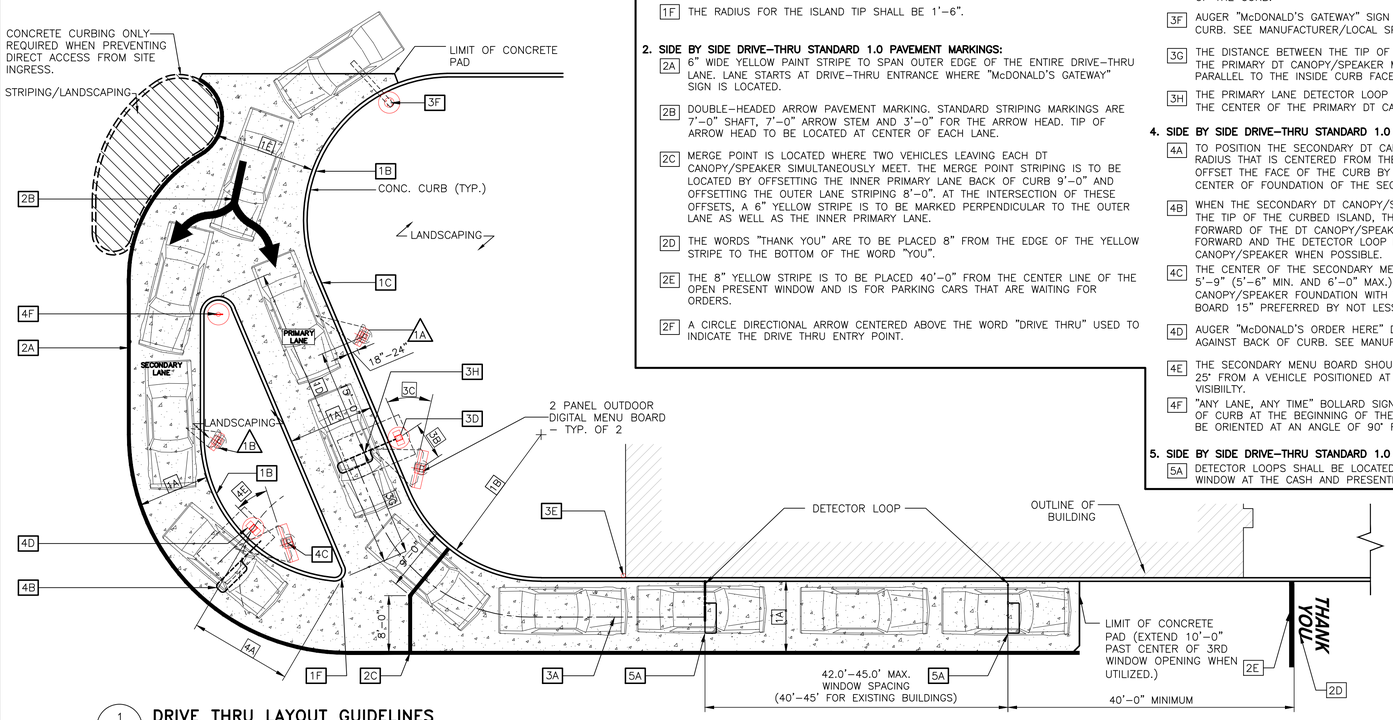

1 DT1.0 **DRIVE THRU LAYOUT GUIDELINES**
1" = 10'-0"

SIDE BY SIDE DRIVE-THRU STANDARD 1.0

1. SIDE BY SIDE DRIVE-THRU STANDARD 1.0 CURBING DETAILS:

1A DRIVE-THRU LANES BOUND BY CURB ON BOTH SIDES ARE TO BE 12'-0". LANES BOUND BY CURB ON ONE SIDE AND PAINTED STRIPING ON THE OTHER SIDE ARE TO BE A MIN. OF 10'-0".

1B THE MIN. RADIUS FOR ALL INSIDE/DRIVER'S SIDE DRIVE-THRU CURBING IS 20'-0".

1C PRIMARY LANE CURBING SHOULD BE AS STRAIGHT AS POSSIBLE. (LESS CURVING, THE BETTER).

1D THE OVERALL LENGTH OF THE CURBED ISLAND SHOULD BE 35'-45'. THE LENGTH OF THE ISLAND FROM THE DT CANOPY/SPEAKER ALLOWS FOR THREE CARS IN THE SECONDARY LANE, TWO IN THE PRIMARY LANE AND ONE AT THE COMMITMENT POINT.

1E ENTRANCE LANE ENTERING THE SIDE BY SIDE DRIVE-THRU IS TO BE 14'-0" MIN.

1F THE RADIUS FOR THE ISLAND TIP SHALL BE 1'-6".

2. SIDE BY SIDE DRIVE-THRU STANDARD 1.0 PAVEMENT MARKINGS:

2A 6" WIDE YELLOW PAINT STRIPE TO SPAN OUTER EDGE OF THE ENTIRE DRIVE-THRU LANE. LANE STARTS AT DRIVE-THRU ENTRANCE WHERE "McDONALD'S GATEWAY" SIGN IS LOCATED.

2B DOUBLE-HEADED ARROW PAVEMENT MARKING. STANDARD STRIPING MARKINGS ARE 7'-0" SHAFT, 7'-0" ARROW STEM AND 3'-0" FOR THE ARROW HEAD. TIP OF ARROW HEAD TO BE LOCATED AT CENTER OF EACH LANE.

2C MERGE POINT IS LOCATED WHERE TWO VEHICLES LEAVING EACH DT CANOPY/SPEAKER SIMULTANEOUSLY MEET. THE MERGE POINT STRIPING IS TO BE LOCATED BY OFFSETTING THE INNER PRIMARY LANE BACK OF CURB 9'-0" AND OFFSETTING THE OUTER LANE STRIPING 8'-0". AT THE INTERSECTION OF THESE OFFSETS, A 6" YELLOW STRIPE IS TO BE MARKED PERPENDICULAR TO THE OUTER LANE AS WELL AS THE INNER PRIMARY LANE.

2D THE WORDS "THANK YOU" ARE TO BE PLACED 8" FROM THE EDGE OF THE YELLOW STRIPE TO THE BOTTOM OF THE WORD "YOU".

2E THE 8" YELLOW STRIPE IS TO BE PLACED 40'-0" FROM THE CENTER LINE OF THE OPEN PRESENT WINDOW AND IS FOR PARKING CARS THAT ARE WAITING FOR ORDERS.

2F A CIRCLE DIRECTIONAL ARROW CENTERED ABOVE THE WORD "DRIVE THRU" USED TO INDICATE THE DRIVE THRU ENTRY POINT.

3. SIDE BY SIDE DRIVE-THRU STANDARD 1.0 EQUIPMENT POSITIONING FOR PRIMARY LANE:

3A MIN. 60'-0" (+5', 60'-65') LINEAR DISTANCE BETWEEN THE CENTER LINE OF THE DT CANOPY/SPEAKER FACE AND THE CENTER LINE OF THE OPEN ORDER BOOTH WINDOW AS MEASURED ALONG THE CENTER LINE OF THE LANE. THIS MAY ONLY BE INCREASED IN 20'-0" INCREMENTS (±5' FOR 80', 100', AND 120') TO A MAX OF 120'. 100'-0" IS OPTIMAL.

3B THE CENTER OF THE PRIMARY MENU BOARD FOUNDATION IS TO BE 5'-9" (5'-6" MIN. AND 6'-0" MAX.) FROM THE CENTER OF THE DT CANOPY/SPEAKER FOUNDATION WITH THE END CAP OF THE PRIMARY MENU BOARD 15" PREFERRED BUT NOT LESS THAN 12" FROM THE FACE OF CURB. .

3C THE PRIMARY MENU BOARD SHOULD BE AT AN ANGLE OF APPROXIMATELY 25° TO 35° ANGLE (35° PREFERRED) FROM A CAR POSITIONED AT THE DT CANOPY/SPEAKER AND WITH 100% VISIBILITY.

3D AUGER "McDONALD'S ORDER HERE CANOPY" CANOPY FOUNDATION TIGHT AGAINST BACK OF CURB. SEE MANUFACTURER/LOCAL SPECIFICATIONS FOR DETAILS.

3E A SINGLE BOLLARD SHOULD BE POSITIONED AT THE CORNER OF THE BUILDING ON THE DRIVE-THRU SIDE. IT SHOULD BE FLUSH AGAINST THE BUILDING AND FACE OF THE BOLLARD SHOULD BE TIGHT AGAINST THE BACK OF THE CURB.

3F AUGER "McDONALD'S GATEWAY" SIGN FOUNDATION TIGHT AGAINST BACK OF CURB. SEE MANUFACTURER/LOCAL SPECIFICATIONS FOR DETAILS.

3G THE DISTANCE BETWEEN THE TIP OF THE CURBED ISLAND AND THE CENTER LINE OF THE PRIMARY DT CANOPY/SPEAKER MUST BE 15'-0". THIS MEASUREMENT IS TAKEN PARALLEL TO THE INSIDE CURB FACE OF THE PRIMARY LANE.

3H THE PRIMARY LANE DETECTOR LOOP SHOULD BE PERPENDICULAR TO THE CENTER OF THE PRIMARY DT CANOPY/SPEAKER.

4. SIDE BY SIDE DRIVE-THRU STANDARD 1.0 EQUIPMENT POSITIONING FOR SECONDARY LANE:

4A TO POSITION THE SECONDARY DT CANOPY/SPEAKER, DRAW AN ARC WITH A 14' RADIUS THAT IS CENTERED FROM THE MIDPOINT OF THE ISLAND TIP. THEN OFFSET THE FACE OF THE CURB BY 24" TO DETERMINE THE LOCATION OF CENTER OF FOUNDATION OF THE SECONDARY DT CANOPY/SPEAKER.

4B WHEN THE SECONDARY DT CANOPY/SPEAKER IS LOCATED AT 14'-0" FROM THE TIP OF THE CURBED ISLAND, THE LOOP DETECTOR IS TO BE 2'-0" FORWARD OF THE DT CANOPY/SPEAKER CENTER LINE WITH THE LOOP FACING FORWARD AND THE DETECTOR LOOP PERPENDICULAR TO THE SECONDARY DT CANOPY/SPEAKER WHEN POSSIBLE.

4C THE CENTER OF THE SECONDARY MENU BOARD FOUNDATION SHALL BE 5'-9" (5'-6" MIN. AND 6'-0" MAX.) FROM CENTER OF THE DT CANOPY/SPEAKER FOUNDATION WITH THE END CAP OF THE SECONDARY MENU BOARD 15" PREFERRED BY NOT LESS THAN 12" FROM FACE OF CURB.

4D AUGER "McDONALD'S ORDER HERE" DT CANOPY/SPEAKER FOUNDATION TIGHT AGAINST BACK OF CURB. SEE MANUFACTURER/LOCAL SPECIFICATIONS FOR DETAILS.

4E THE SECONDARY MENU BOARD SHOULD BE AT AN ANGLE OF APPROXIMATELY 25° FROM A VEHICLE POSITIONED AT THE DT CANOPY/SPEAKER AND WITH 100% VISIBIILTY.

4F "ANY LANE, ANY TIME" BOLLARD SIGN MUST BE A MIN. OF 1'-6" FROM FACE OF CURB AT THE BEGINNING OF THE LANDSCAPE ISLAND. BOLLARD SIGN IS TO BE ORIENTED AT AN ANGLE OF 90° FROM THE CURB.

5. SIDE BY SIDE DRIVE-THRU STANDARD 1.0 DETECTOR LOOP:

5A DETECTOR LOOPS SHALL BE LOCATED AT THE CENTER OF THE OPENING WINDOW AT THE CASH AND PRESENTER BOOTHS.

SIDE BY SIDE DRIVE-THRU STANDARD 1.0 FEATURES:

1. SIDE BY SIDE DRIVE-THRU STANDARD 1.0 EQUIPMENT:

1A PRE-BROWSE BOARD MUST BE 18"-24" FROM FACE OF CURB. THE DISTANCE BETWEEN THE PRIMARY DT CANOPY/SPEAKER AND PRE-BROWSE BOARD IS TO BE 15' AS MEASURED ALONG THE FACE OF CURB. THIS IS MEASURED FROM THE CENTER OF THE PRE-BROWSE BOARD FOUNDATION TO THE CENTER OF THE DT CANOPY/SPEAKER FOUNDATION. THE ANGLE (APPROXIMATELY 50') OF THE PRE-BROWSE BOARD SHOULD MAXIMIZE VISIBILITY TO THE SECOND CAR FROM DT CANOPY/SPEAKER.

1B PRE-BROWSE BOARD MUST BE MIN. 12" FROM FACE OF CURB. THE DISTANCE BETWEEN THE SECONDARY DT CANOPY/SPEAKER AND PRE-BROWSE BOARD IS TO BE 15' AS MEASURED ALONG FACE OF THE CURB. THIS IS MEASURED FROM THE POINT PERPENDICULAR TO THE CENTER OF THE PRE-BROWSE BOARD FOUNDATION TO THE POINT PERPENDICULAR TO THE CENTER OF THE DT CANOPY/SPEAKER FOUNDATION. THE ANGLE OF THE PRE-BROWSE BOARD SHOULD MAXIMIZE VISIBILITY TO THE SECOND CAR FROM DT CANOPY/SPEAKER (PREFERRED 35').

GENERAL NOTES

1. **DRIVE-THRU ELEMENTS:**
   DT CANOPY/SPEAKER DRIVE-THRU PYLON/CLEARANCE POLE AND BOLLARD SIGN SHALL BE CONSISTENT WITH THE STANDARD BUILDING DESIGN DRIVE-THRU ELEMENTS.
   OTHER DESIGNS MAY NOT BE USED.
2. CONTRACTOR SHALL COORDINATE WITH APPLICABLE PLANS, McDONALD'S AREA CONSTRUCTION MANAGER, CONTENT SUPPLIER AND SIGNAGE SUPPLIER TO DETERMINE EXACT LOCATION, ORIENTATION, MOUNTING HEIGHTS, AND NUMBER OF BOARDS AND OTHER DRIVE-THRU ELEMENTS TO BE INSTALLED AT THIS SITE. ALL WORK TO BE COORDINATED WITH OTHER TRADES.
3. CONTACT McDONALD'S AREA CONSTRUCTION MANAGER FOR DRIVE-THRU ELEMENT FOOTING AND WIRING REQUIREMENTS NOT SHOWN. (INFORMATION ALSO AVAILABLE THROUGH VENDOR WEBSITES) SIGNAGE MANUFACTURER TO PROVIDE FOOTING ANCHORS & TEMPLATES TO G.C. PRIOR TO FOUNDATION POURING.
4. SEE DETAIL 2/DT1.0 FOR DETECTOR LOOP INFORMATION, ELECTRICAL SHEETS FOR LOW VOLTAGE CONDUIT DIAGRAM AND FOR DRIVE THRU POWER DIAGRAM; VENDOR'S SPECIFICATIONS SHALL GOVERN UPON ANY DISCREPANCIES.
5. CONTRACTOR TO COORDINATE THE RESPONSIBILITIES OF THE ELECTRICAL CONTRACTOR, CONTENT SUPPLIER AND THE SIGN SUPPLIER.
6. CONTRACTOR TO INSTALL PRE-FORMED, PRE-WIRED VEHICLE DETECTOR LOOP.
7. CONTRACTOR SHALL VERIFY CONDUIT SIZES REQUIRED BY VEHICLE LOOP DETECTOR SUPPLIER.

NOTES

1. VERIFY CONDUIT SIZES AND LAYOUT WITH DETECTOR LOOP MANUFACTURER.
2. CENTER VEHICLE DETECTOR LOOP IN DRIVE THRU LANE. INSTALL PER MFR. RECOMMENDATIONS.
3. NO STEEL (REBAR OR ELECTRICAL WIRE) SHALL BE USED WITHIN 2' OF LOOP.
4. DETECTOR LOOP MANUFACTURERS:
   DETECTOR LOOPS MAY BE BY ONE OF THE FOLLOWINGS COMPANIES OR EQUAL.
   3M: 1-800-328-0033
   HME: 1-800-848-4468
5. DETECTOR LOOP MATERIAL:
   PVC TUBING 1/2" I.D. 100 PSI LOOP MADE FROM ONE LENGTH OF THIN FOURTEEN GAUGE STRANDED WIRE. LEAD-IN IS PRE-TWISTED AT FACTORY.
6. DETECTOR LOOP CONSTRUCTION:
   FORMED WITH ONE CONTINUOUS LENGTH OF PVC WITH NO SHARP CORNERS AS DETAILED. WIRE LOOPED, FORMED, & PIGTAILED AS DETAILED.

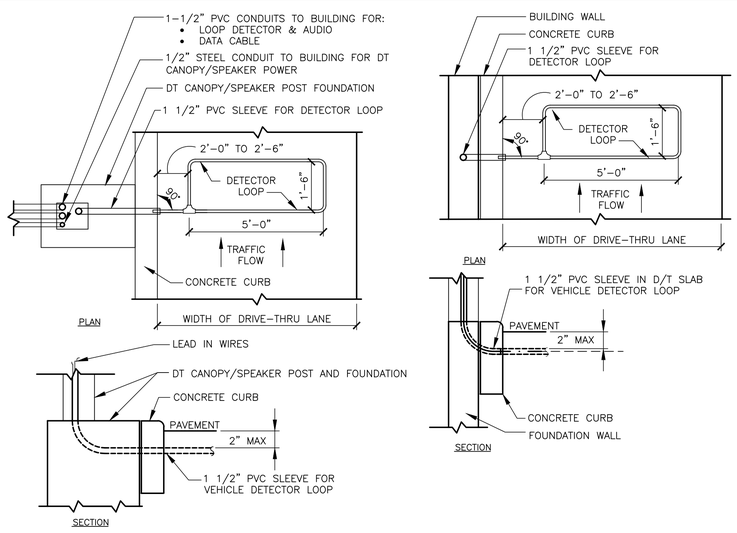

A – DT CANOPY/SPEAKER DETECTOR LOOP

B – DT WINDOW DETECTOR LOOP

2 DT1.0 **DETECTOR LOOP DETAILS**
NOT TO SCALE

REV	DATE	DESCRIPTION	BY

REGISTERED ARCHITECT JEREMY WILLIAMS 7926 STATE OF TEXAS

PREPARED BY:
JAW Architects, Inc.
Jeremy Williams, Architect
Phone: 817.926.3387
Email: jeremy@jaw-arch.com

PREPARED FOR:
McDonald's USA, LLC

© 2024 McDonald's USA, LLC

These drawings and specifications are the confidential and proprietary property of McDonald's USA, LLC and are tendered for review and consideration only upon the express agreement that they will be returned upon request and not copied or reproduced without written authorization. The contract documents were prepared for use on this specific site in conjunction with its issue date and are not suitable for use on any other project. Reproduction of these drawings for reference or example on another project requires the services of properly licensed architects and engineers. Reproduction of the contract documents for reuse on another project is not authorized.

DRAWN BY: JAW
STD ISSUE DATE: 2024
REVIEWED BY: JAW
DATE ISSUED: 10/11/2024

TITLE: 2024 STANDARD BUILDING – BB20 4584-WOOD/WOOD

DESCRIPTION	
WOOD BEARING WALLS WITH HARDIE SIDING	
WOOD ROOF TRUSS FRAMING	
EFS/BATTEN/METAL/HARDIE SIDING EXTERIOR FINISHES	
SITE ID	SITE ADDRESS
042-3591	NWC OF FM 460 & FM 740, FORNEY TEXAS

JAWA 24-0151

SHEET NO. DT1.0
DRIVE-THRU DETAILS

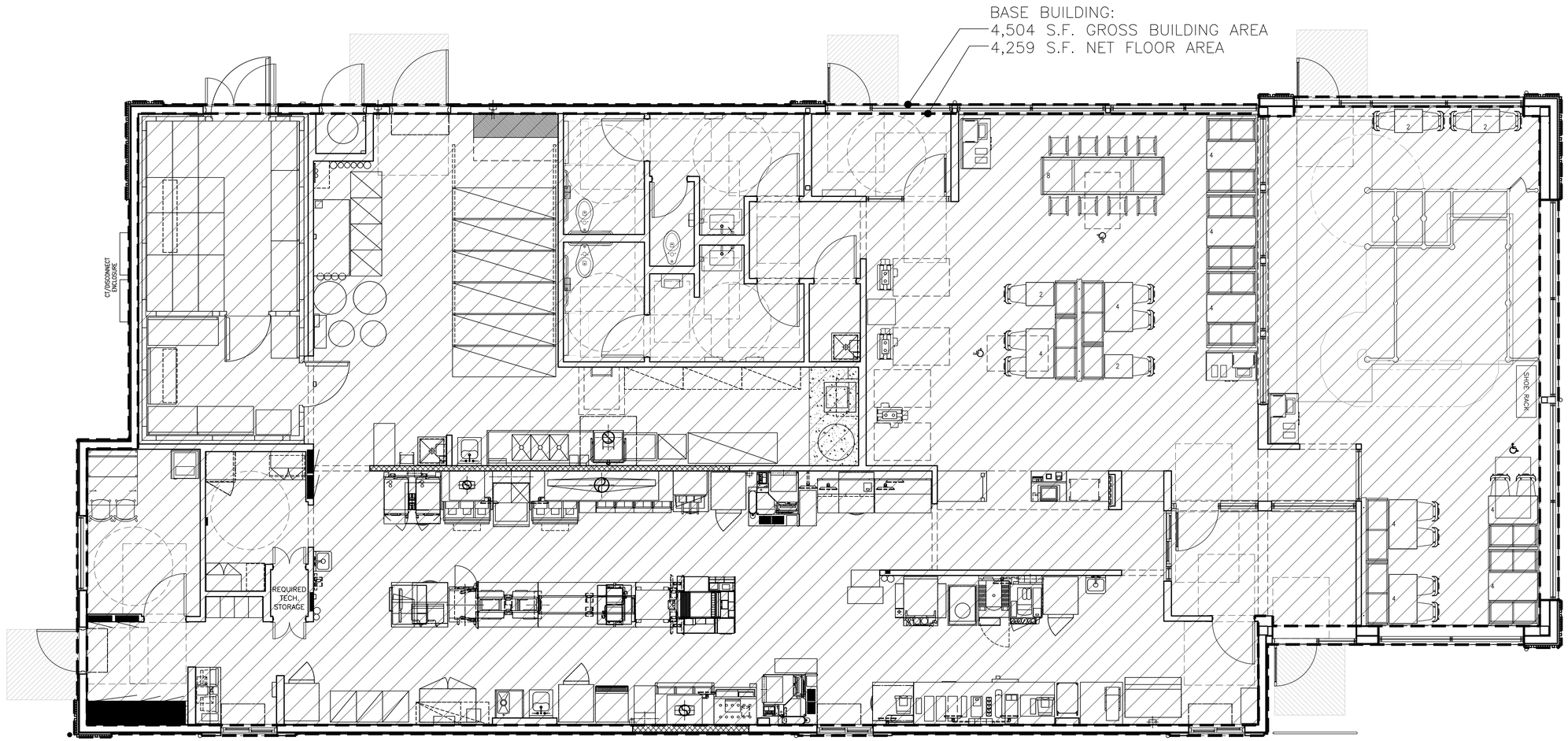

1 R1.0 SQUARE FOOTAGE PLAN
1/4"=1'-0"

REV	DATE	DESCRIPTION	BY
1	04/08/2025	COUNTY COMMENTS, M-O OC COMMENTS, & UTILITY COORDINATION	
2	05/09/2025	PLATPLACE ADDITION	

REGISTERED ARCHITECT JEREMY WILLIAMS #19276 STATE OF TEXAS

PREPARED BY:
JAW Architects, Inc.
Jeremy Williams, Architect
Phone: 817.703.3387
Email: jeremy@jaw-arch.com

PREPARED FOR:
McDonald's USA, LLC

© 2025 McDonald's USA, LLC

These drawings and specifications are the confidential and proprietary property of McDonald's USA, LLC and shall not be copied or reproduced without written authorization. The contract documents were prepared for use on this specific site and are in conformance with its issue date and local building codes and ordinances in effect at that time. Reproductions of these drawings for reference or example on another project requires the services of properly licensed architects and engineers. Reproduction of the contract documents for re-use on another project is not authorized.

DRAWN BY: JAW
STD ISSUE DATE: 2024
REVIEWED BY: JAW
DATE ISSUED: 10/11/2024

TITLE: 2024 STANDARD BUILDING – BB20
4584–WOOD/WOOD

DESCRIPTION
WOOD BEARING WALLS WITH HARDIE SIDING
WOOD ROOF TRUSS FRAMING
EIFS/BATTEN/METAL/HARDIE SIDING EXTERIOR FINISHES

SITE ID: 042–3591
SITE ADDRESS: NWC OF FM 460 & FM 740, FORNEY TEXAS

SHEET NO.
JAWA 24–0151
R1.0
SQUARE FOOTAGE

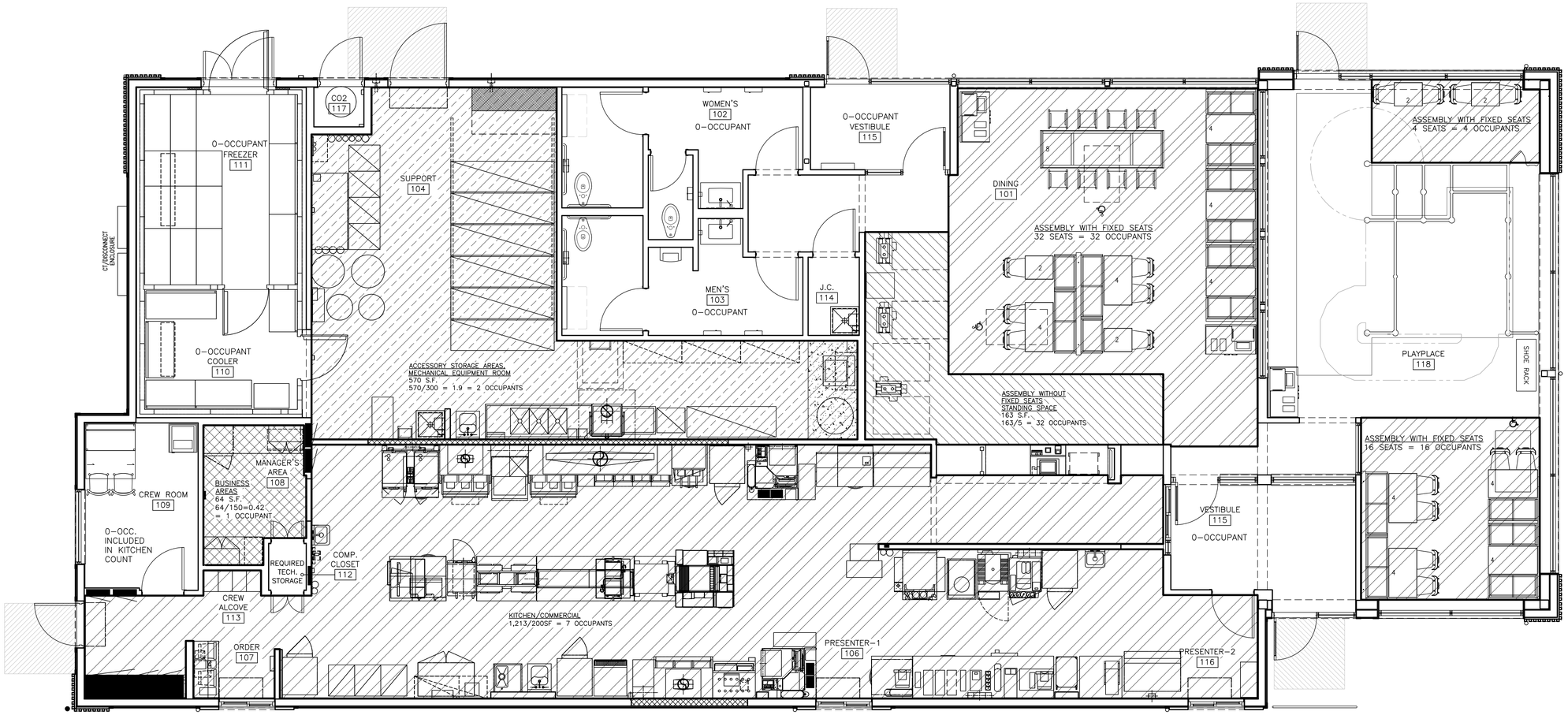

1 R1.1 OCCUPANY COUNT PLAN
1/4"=1'-0"

OCCUPANCY ALLOWANCE:

2024 INTERNATIONAL BUILDING CODE

TABLE 1004.5
MAXIMUM FLOOR AREA ALLOWANCES PER OCCUPANT

FUNCTION OF SPACE	ALLOWANCE	AREA	OCCUPANTS
ACCESSORY STORAGE AREAS, MECHANICAL EQUIPMENT ROOM	300 GROSS	570 SF	2
ASSEMBLY WITH FIXED SEATS	SEE PLAN	–	52
ASSEMBLY W/OUT FIXED SEATS STANDING SPACE	5 NET	195 SF	32
BUSINESS AREAS	150 GROSS	64 SF	1
KITCHENS, COMMERCIAL	200 GROSS	1,213	7
TOTAL OCCUPANCY ALLOWANCE			94

REV	DATE	DESCRIPTION	BY
1	04/08/2025	COUNTY COMMENTS, M-O OC COMMENTS, & UTILITY COORDINATION	
2	05/09/2025	PLAYPLACE ADDITION	

REGISTERED ARCHITECT JEREMY WILLIAMS 21926 STATE OF TEXAS

PREPARED BY:
JAW Architects, Inc.
Jeremy Williams, Architect
Phone:817/702-3387
Email: jeremy@jaw-arch.com

PREPARED FOR:
McDonald's USA, LLC

© 2025 McDonald's USA, LLC
These drawing and specifications are the confidential and proprietary property of McDonald's USA, LLC and shall not be copied or reproduced without written authorization. The contract documents were prepared for use on this specific site in conjunction with its issue date and are suitable for use only on that project. Any other use or reuse on another project requires the services of a registered architect and engineer. Reproductions of these drawings for reference or example on another project requires the services of a registered architect and engineer. Reproductions of the contract documents for reuse on another project is not authorized.

DRAWN BY JAW
STD ISSUE DATE 2024
REVIEWED BY JAW
DATE ISSUED 10/11/2024

TITLE 2024 STANDARD BUILDING – BB20 4584–WOOD/WOOD

DESCRIPTION
WOOD BEARING WALLS WITH HARDIE SIDING
WOOD ROOF TRUSS FRAMING
EFS/BATTEN/METAL/HARDIE SIDING EXTERIOR FINISHES

SITE ID 042–3591
SITE ADDRESS NWC OF FM 460 & FM 740, FORNEY TEXAS

SHEET NO. JAWA 24–0151
R1.1
OCCUPANCY PLAN

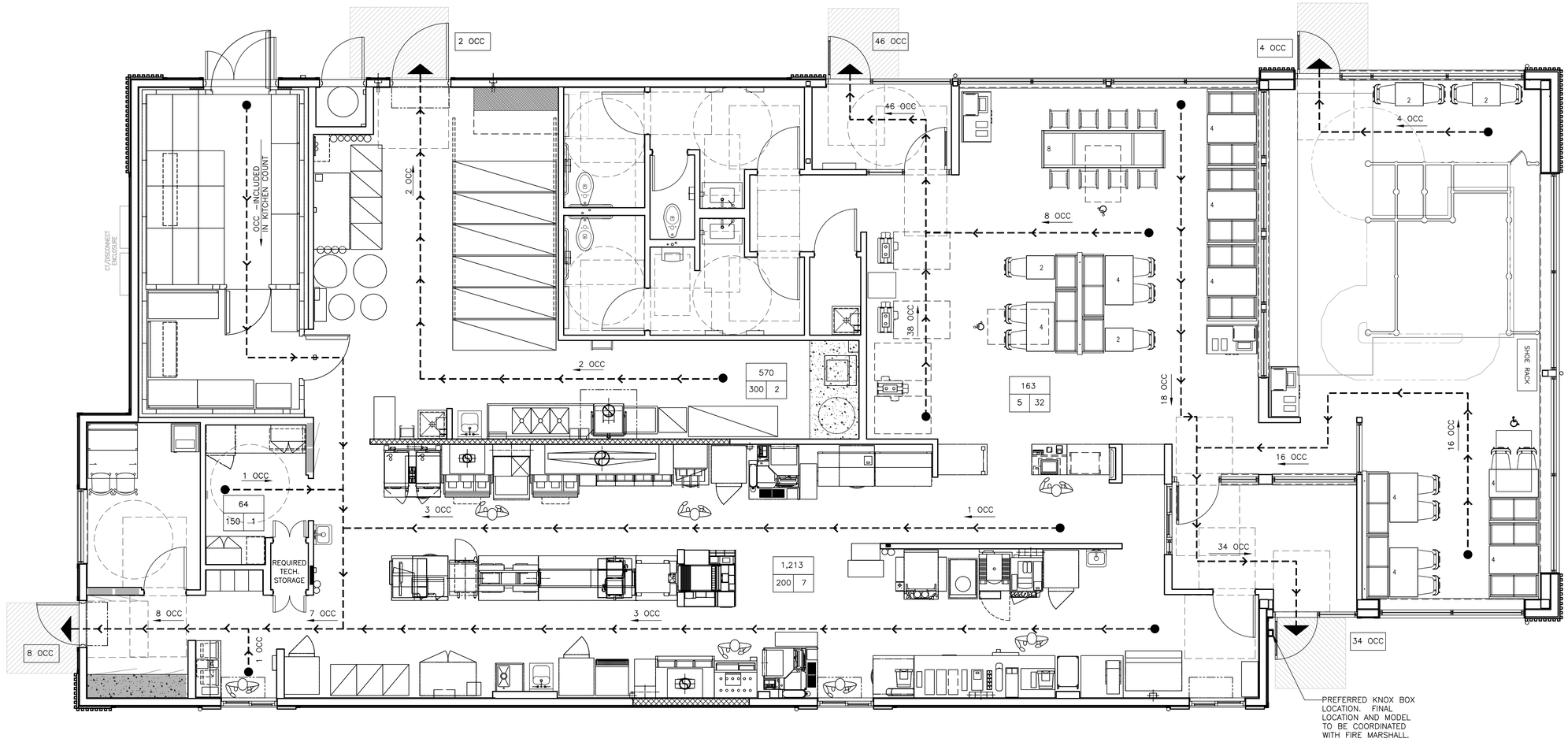

1 R1.2 EXITING/EGRESS PLAN
1/4"=1'-0"

OCCUPANCY ALLOWANCE:

2024 INTERNATIONAL BUILDING CODE

TABLE 1004.5
MAXIMUM FLOOR AREA ALLOWANCES PER OCCUPANT

FUNCTION OF SPACE	ALLOWANCE	AREA	OCCUPANTS
ACCESSORY STORAGE AREAS, MECHANICAL EQUIPMENT ROOM	300 GROSS	570 SF	2
ASSEMBLY WITH FIXED SEATS	SEE PLAN	–	52
ASSEMBLY W/OUT FIXED SEATS STANDING SPACE	5 NET	195 SF	32
BUSINESS AREAS	150 GROSS	64 SF	1
KITCHENS, COMMERCIAL	200 GROSS	1,213	7
TOTAL OCCUPANCY ALLOWANCE			94

REV	DATE	DESCRIPTION	BY
1	04/08/2025	COUNTY COMMENTS, M-O OC COMMENTS, & UTILITY COORDINATION	
2	05/09/2025	PLATPLACE ADDITION	

REGISTERED ARCHITECT JEREMY WILLIAMS 21926 STATE OF TEXAS

PREPARED BY:
JAW Architects, Inc.
Jeremy Williams, Architect
Phone: 817/920-3387
Email: jeremy@jaw-arch.com

PREPARED FOR:
McDonald's USA, LLC

© 2025 McDonald's USA, LLC
These drawing and specifications are the confidential and proprietary property of McDonald's USA, LLC and shall not be copied or reproduced without written authorization. The contract documents were prepared for use on this specific site in conjunction with its issue date and are suitable for use only in the state of Texas. Reproductions of these drawings for reference or example on another project required the services of Property Restoration architects and engineers. Reproductions by contract documents for reuse on another project is not authorized.

DRAWN BY JAW
STD ISSUE DATE 2024
REVIEWED BY JAW
DATE ISSUED 10/11/2024

TITLE
2024 STANDARD BUILDING – BB20
4584–WOOD/WOOD

DESCRIPTION
WOOD BEARING WALLS WITH HARDIE SIDING
WOOD ROOF TRUSS FRAMING
EFS/BATTEN/METAL/HARDIE SIDING EXTERIOR FINISHES

SITE ID 042–3591
SITE ADDRESS NWC OF FM 460 & FM 740, FORNEY TEXAS

SHEET NO. JAWA 24–0151
R1.2
EXITING PLAN

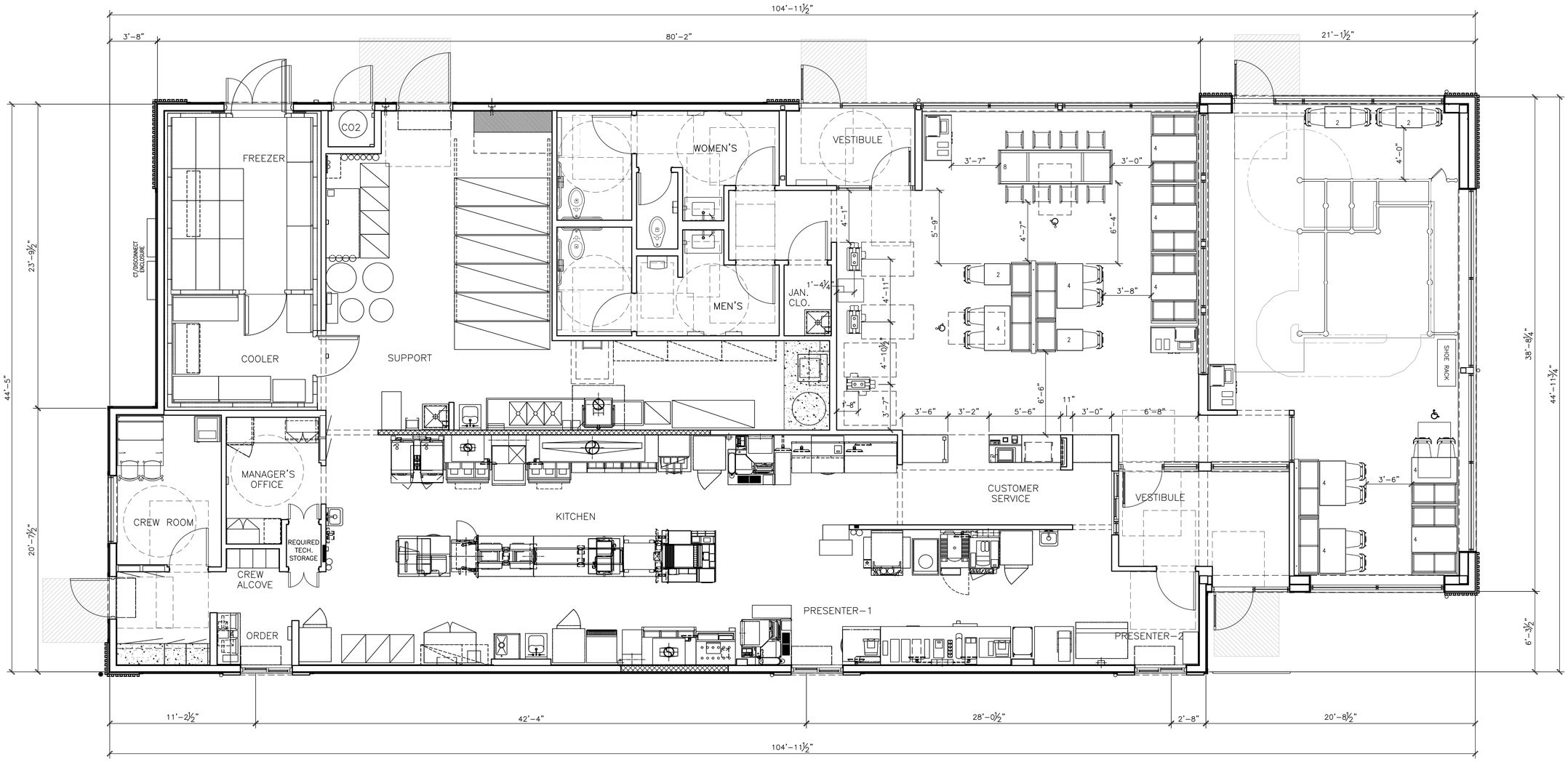

1 R1.3 **FLOOR PLAN**
1/4"=1'-0"

4584 - WW PLAN

4,504 GROSS SQ. FT. / 4,259 NET SQ. FT.
52 SEATS (3 ACCESSIBLE SEATS)

THIS DRAWING IS
FOR REFERENCE ONLY
NOT FOR CONSTRUCTION
SEATING LAYOUT IS SCHEMATIC, THE FINAL
SEATING LAYOUT TO BE PROVIDED BY OTHERS.

REV	DATE	DESCRIPTION	BY
1	04/08/2025	COUNTY COMMENTS, M-O OC COMMENTS, & UTILITY COORDINATION	
2	05/09/2025	PLATPLACE ADDITION	

REGISTERED ARCHITECT JEREMY WILLIAMS 21926 STATE OF TEXAS

Phone: 817.920.3387
Email: jeremy@jaw-arch.com

PREPARED BY:
JAW Architects, Inc.
Jeremy Williams, Architect

PREPARED FOR:
McDonald's USA, LLC

© 2026 McDonald's USA, LLC

These drawings and specifications are the confidential and proprietary property of McDonald's USA, LLC and shall not be copied or reproduced without written authorization. The contract documents were prepared for use on this specific site in conjunction with its issue date and are not suitable for use on any other project. If the scope of work for this project requires the use of these drawings for reference or example on another project requires the services of a licensed architect and engineer. Reproductions of the contract documents for reuse on another project is not authorized.

DRAWN BY: JAW
STD ISSUE DATE: 2024
REVIEWED BY: JAW
DATE ISSUED: 10/11/2024

TITLE: 2024 STANDARD BUILDING – BB20
4584–WOOD/WOOD

DESCRIPTION: WOOD BEARING WALLS WITH HARDIE SIDING
WOOD ROOF TRUSS FRAMING
EIFS/BATTEN/METAL/HARDIE SIDING EXTERIOR FINISHES

SITE ID: 042–3591
SITE ADDRESS: NWC OF FM 460 & FM 740, FORNEY TEXAS

SHEET NO.: JAWA 24–0151
R1.3
SEATING PLAN

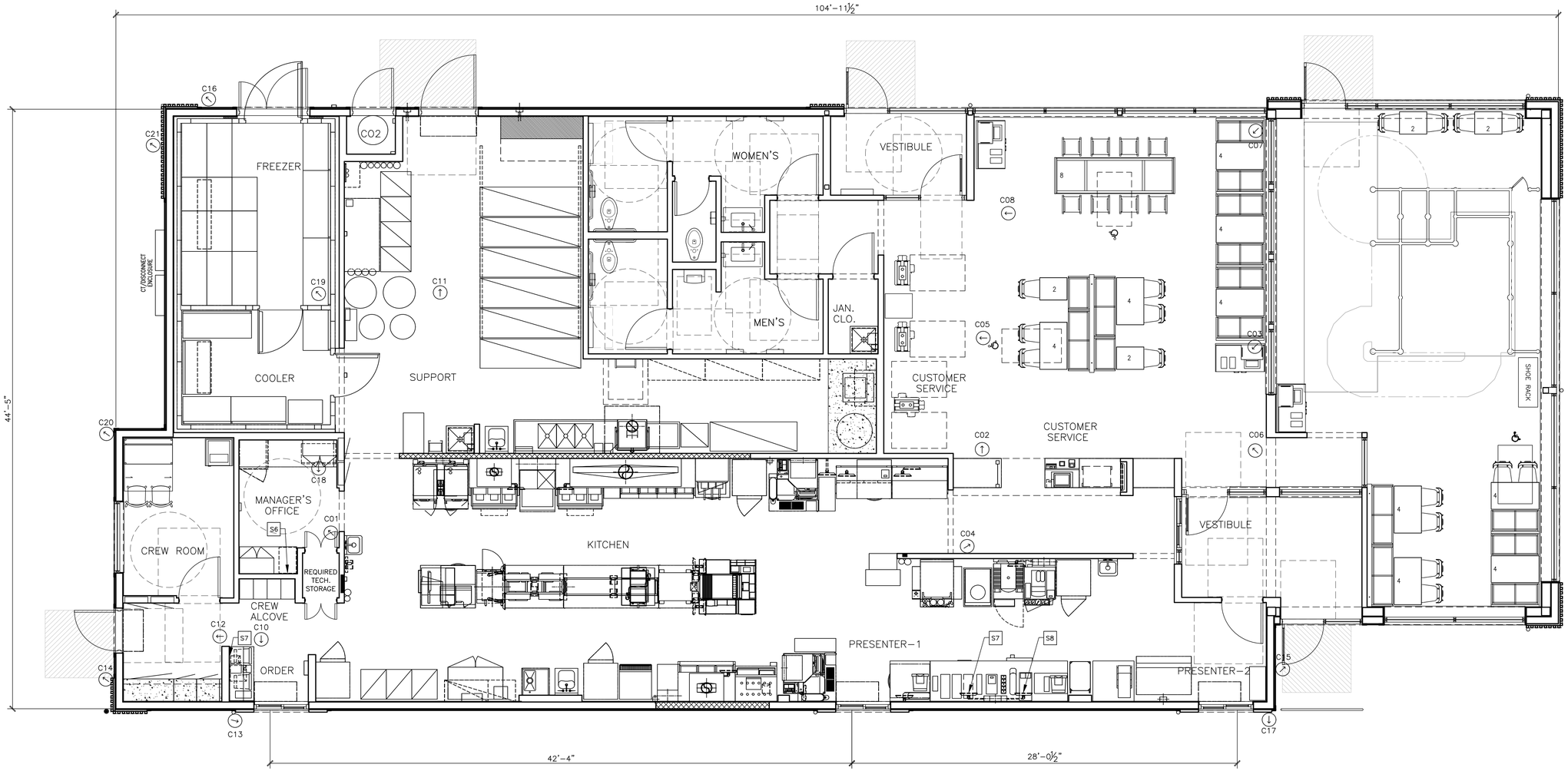

1 R1.4 **FLOOR PLAN**
1/4"=1'-0"

IP-CCTV SCHEDULE:

CAMERA #	RESTAURANT AREA – CAMERA FOV	MODEL
1	OFFICE SAFE	QND-6011
2	PRIMARY CUSTOMER ENTRANCE	QND-6011
3	SECONDARY CUSTOMER ENTRANCE	QND-6011
4	FRONT COUNTER / REGISTERS	QND-6011
5	KIOSKS	QND-6011
6	MAIN DINING / LOBBY	QND-6011
7	MAIN DINING / LOBBY 2	QND-6011
8	RESTROOM ENTRANCE / SIDE DINING	QND-6011
9	PLAY PLACE INTERIOR / EXTERIOR (IF APPLICABLE)	QND-6011/ QNV-6012R1
10	CASH BOOTH ID	QND-6011
11	SIDE DELIVERY DOOR	QND-6011
12	DELIVERY BACKDOOR	QND-6011
13	DT LICENSE PLATE	QNV-6012R1
14	TRASH CORRAL	QNV-6012R1
15	FRONT PARKING LOT VIEW / CURBSIDE	QNV-6012R1
16	GENERAL PARKING LOT / DRIVE THRU ENTRANCE	QNV-6012R1
17	GENERAL PARKING LOT / DRIVE THRU EXIT / PULL FORWARD	QNV-6012R1
18	NETWORK CLOSET	QND-6011
19	FREEZER	QNV-6012R1
20	DANGER ZONE	QNV-6012R1
21	MERGE POINT	QNV-6012R1

IP-CCTV NOTES:

C1. GC TO CONSULT OWNER OPERATOR (O/O) FOR PREFERRED SECURITY LEVEL. REFER TO THE U.S. IP-CCTV MINIMUM REQUIREMENT FIELD OF VIEW (FOV) GUIDE. REFER TO PLUS UP GUIDE FOR OTHER OPTIONAL SECURITY FEATURES. MCDONALD'S US SECURITY REFERENCE GUIDE AVAILABLE ON @MCD US SECURITY WEBSITE.

C2. GC TO COORDINATE INSTALLATION WITH SECURITY INSTALLER.

C3. FOR IP-CCTV SPECIFICATIONS REFER TO THE U.S. IP-CCTV MINIMUM REQUIREMENT FIELD OF VIEW (FOV). MCDONALD'S US SECURITY REFERENCE GUIDE AVAILABLE ON @MCD US SECURITY WEBSITE.

C4. ROUTE DATA CABLE IN ACCORDANCE TO THE LOW VOLTAGE CABLE MANAGEMENT SPECIFICATION ON E1.0.

C5. PARKING LOT IP-CCTV PLACEMENT WILL VARY BASED ON SITE LAYOUT. VERIFY IN FIELD.

C6. ADJUST INTERIOR IP-CCTV LOCATIONS BASED ON CEILING ELEMENTS AND DECOR PACKAGE SELECTED TO MAINTAIN FOV IN REFERENCE GUIDE.

SYSTEM NOTES:

S1. IP-CCTV CAMERA SYSTEM SHALL BE SERVER BASED AND HOUSED IN THE O/O EQUIPMENT RACK (221.09) SEPARATE FROM THE POS RACK. EQUIPMENT TO BE POWERED FROM O/O EQUIPMENT RACK PDU (900W).

S2. O/O EQUIPMENT WILL HAVE ITS OWN PATCH PANELS AND SWITCHES. DO NOT CONNECT TO THE POS SWITCHES.

S3. CAMERAS ARE POWERED OVER ETHERNET (POE) AND ARE POWERED FROM A POE SWITCH.

S4. CAMERA PLACEMENTS AND VIEWS SHALL ADHERE TO THE MCD US IP-CCTV MINIMUM STANDARD DOCUMENT.

S5. ALERT CAPABILITY TO BE PROVIDED FOR BACK DOOR EVENTS.

S6. 32 IN. MONITOR TO BE INSTALLED AT MANAGERS DESK. MONITOR TO BE CONFIGURED TO DISPLAY NINE VIEWS DETERMINED BY THE O/O WITH THE ABILITY TO DISPLAY ALL CAMERA VIEWS.

S7. 24 IN. MONITOR TO BE INSTALLED TO DISPLAY. MERGE POINT, DANGER ZONE, AND CURBSIDE CAMERAS. SEE 217.13 ON ELECTRICAL SHEETS.

S8. 24 IN. MONITOR TO DISPLAY PULL FORWARD CAMERA. SEE 217.13 ON ELECTRICAL SHEETS.

CAMERA SPECIFICATIONS:

LISTED BELOW ARE MCDONALD'S APPROVED IP-CCTV CAMERAS. THE BELOW SPECIFICATIONS MUST BE MET OR EXCEEDED BY ANY NEW CAMERAS.

HANWHA QND-6011

BEST FOR INTERIOR RESTAURANT USE SUCH AS DINING, KITCHEN, AND CREW AREAS

1. 2 MEGAPIXEL RESOLUTION
2. BUILT-IN 2.8MM FIXED LENS
3. ULTRA-COMPACT DESIGN
4. 30FPS@ALL RESOLUTIONS (H.265/H.264)
5. H.265, H.264, MJPEG CODEC SUPPORTED
6. ONVIF PROFILE S, ONVIF PROFILE G, AND ONVIF PROFILE T
7. MULTIPLE, INDIVIDUALLY CONFIGURABLE VIDEO STREAMS
8. FULL NDAA COMPLIANCE
9. DAY & NIGHT (ICR), WDR (120DB)
10. DEFOCUS DETECTION, MOTION DETECTION, TAMPERING DETECTION
11. PEOPLE COUNTING FOR RETAIL BUSINESS INTELLIGENCE
12. MICRO SD (128GB) MEMORY SLOT, POE / 12V DC
13. HALLWAY VIEW SUPPORT
14. IP42, IK08 RATED
15. LDC SUPPORT (LENS DISTORTION CORRECTION)
16. GENETEC STRATOCAST COMPATIBLE

HANWHA QNV-6012R1

BEST FOR ENVIRONMENTAL AREAS SUCH AS DRIVE-THRU, PARKING LOT, AND FREEZER/WALK-IN COOLER AREAS

1. MAXIMUM 2MEGAPIXEL (1920 X 1080) RESOLUTION
2. 0.03LUX (COLOR), 0LUX (B/W, IR LED ON)
3. 2.8MM FIXED LENS
4. MAXIMUM 30FPS@2MP ALL RESOLUTIONS (H.265/H.264)
5. H.265, H.264, MJPEG CODEC SUPPORTED
6. ONVIF PROFILE S, ONVIF PROFILE G, AND ONVIF PROFILE T
7. MULTIPLE, INDIVIDUALLY CONFIGURABLE VIDEO STREAMS
8. FULL NDAA COMPLIANCE
9. MOTION DETECTION, TAMPERING, DEFOCUS DETECTION
10. HALLWAY VIEW (90/270), LDC SUPPORT
11. MICRO SD/SDHC/SDXC MEMORY SLOT (MAX. 128GB)
12. IR VIEWABLE LENGTH 20M
13. IP66, IK10, POE, 12VDC

RECOMMENDED IP-CCTV VENDORS:

UAS
PHONE: 800-421-6661
EMAIL: CHRIS.MCGURK@UAS.COM

WACHTER
PHONE: 800-462-9638
EMAIL: MCDINSIDESALES@WACHTER.COM

RECORDING APPLIANCE/SERVER AND VIDEO MANAGEMENT SOFTWARE SPECIFICATIONS:

THE MINIMUM TECHNICAL SPECIFICATIONS THAT ANY NEW VMS SYSTEM MUST MEET ARE LISTED BELOW.

1. VIDEO RETENTION: AT LEAST 30 DAYS OF STORAGE*
2. CROSS-PLATFORM: LINUX (UBUNTU, CENTOS, REDHAT) OR WINDOWS (CLIENT, SERVER)
3. WEB BROWSER BASED: NO CLIENT SOFTWARE NEEDED – ACCESS ANYWHERE FROM ANYWHERE (PC, MAC, OR MOBILE)
4. QUICK SOFTWARE INSTALLATION: 5 MINUTES OR LESS (NO WINDOWS DEPENDENCIES)
5. SECURE: SRTP ENCRYPTED VIDEO TRANSMISSION, HTTPS SECURE USER INTERFACE
6. NETWORK OPTIMIZED: PEER-TO-PEER VIDEO TRANSMISSION ACROSS SUBNETS W/ WEBRTC
7. SCALABILITY: FEDERATE TO EITHER THE ENTERPRISE OR CLOUD
8. HARDWARE INDEPENDENT: X86_64, ARM, MIPS (APPLIANCES, SERVERS, IOT DEVICES)
9. APPLICATION PARTNER PLATFORM: THIRD-PARTY API BASED INTEGRATION PLATFORM

*DATA AND IMAGE RETENTION SHOULD FOLLOW LOCAL OR COUNTRY DATA PROTECTION STANDARDS AND REGULATIONS. IT IS RECOMMENDED THAT ORGANIZATIONS HAVE A RETENTION POLICY. THEY SHOULD ONLY KEEP THE IMAGES FOR AS LONG AS NECESSARY TO MEET THE PURPOSE OF RECORDING THEM. IN THE ABSENCE OF STANDARDS AND REGULATIONS, BEST PRACTICES SUGGEST RETAINING IMAGES FOR A MINIMUM OF 30 DAYS IN A SECURE FORMAT BEFORE THEY ARE DELETED OR OVERWRITTEN.

REV	DATE	DESCRIPTION	BY
1	04/08/2025	COUNTY COMMENTS, M/O OC COMMENTS, & UTILITY COORDINATION	
2	05/09/2025	PLATPLACE ADDITION	

REGISTERED ARCHITECT JEREMY WILLIAMS 21926 STATE OF TEXAS

PREPARED BY:
JAW Architects, Inc.
Jeremy Williams, Architect
Phone: 817.703.3387
Email: jeremy@jaw-arch.com

PREPARED FOR:
McDonald's USA, LLC

© 2025 McDonald's USA, LLC

These drawings and specifications are the confidential and proprietary property of McDonald's USA, LLC and shall not be copied or reproduced without written authorization. The contract documents were prepared for use on this specific site in conjunction with its issue date, and are not suitable for use at other locations or for other projects. Reuse of these drawings for reference or example on another project requires the services of properly licensed architects and engineers. Reproductions of the contract documents for reuse on another project is not authorized.

DRAWN BY: JAW
STD ISSUE DATE: 2024
REVIEWED BY: JAW
DATE ISSUED: 10/11/2024

TITLE: 2024 STANDARD BUILDING – BB20
4584-WOOD/WOOD

DESCRIPTION
WOOD BEARING WALLS WITH HARDIE SIDING
WOOD ROOF TRUSS FRAMING
EIFS/BATTEN/METAL/HARDIE SIDING EXTERIOR FINISHES

SITE ID: 042-3591
SITE ADDRESS: NWC OF FM 460 & FM 740, FORNEY TEXAS

SHEET NO.
JAWA 24-0151
R1.4
IP-CCTV PLAN

TYPE 1 COMMERCIAL EXHAUST HOODS

- APPLIANCE, HOOD PLENUM, AND EXHAUST DUCTWORK MUST BE PROTECTED BY A UL 300 AUTOMATIC WET CHEMICAL BASED FIXED FIRE EXTINGUISHING SYSTEM.
- ACTIVATION OF HOOD FIRE EXTINGUISHING SYSTEM SHALL SHUT OFF FUEL AND /OR CURRENT SUPPLY TO COOKING EQUIPMENT AND ELECTRIC RECEPTACLES LOCATED UNDER THE HOOD.
- INSTALLATION MUST BE BY A STATE LICENSED FIRE PROTECTION CONTRACTOR, AND THE HOOD SYSTEM SHALL BE CONNECTED TO THE BUILDING'S FACP, IF THE BUILDING REQUIRES A FIRE ALARM SYSTEM, IFC 904.2.2.
- REFERENCE MECHANICAL DRAWINGS OF EXHAUST DUCTWORK NOTES/DETAILS.

FIRE EXTINGUISHERS:

- PROVIDE PORTABLE FIRE EXTINGUISHERS (NOT LESS THAN 2–A:10–B:C) WITHIN 75 FEET OF ANY POINT IN THE BUILDING, MEASURED ALONG THE PATH OF TRAVEL, IFC 906.1.
- PROVIDE PORTABLE FIRE EXTINGUISHERS WITH A TYPE K RATING, WITHIN 30 FT. OF THE COMMERCIAL COOKING APPLIANCES. THE TYPE K EXTINGUISHER IS IN ADDITION TO THE PORTABLE FIRE EXTINGUISHERS WITH A MINIMUM RATING OF 2–A:10–B:C PROVIDED WITHIN A 75 FT. TRAVEL DISTANCE OF ANY POINT IN THIS FACILITY, IFC 904.12.5.

ANSUL MANUAL PULL STATIONS:

- PROVIDE MANUAL ACTUATION DEVICES (PULL STATIONS) FOR OPERATION OF HOOD EXTINGUISHING SYSTEM.
- DEVICE SHALL BE LOCATED AT OR NEAR A MEANS OF EGRESS FROM THE APPLIANCES BELOW THE TYPE 1 KITCHEN HOOD NOT LESS THAN 10 FEET AND NOT MORE THAN 20 FEET PER IFC 904.13.1

CO2 STORAGE TANK (SEE DETAILS BELOW):

- CARBON DIOXIDE SYSTEMS OVER 101 LBS. USED IN BEVERAGE DISPENSING APPLICATIONS MUST COMPLY WITH THE IFC SECTION 5307, NFPA 55, AND CGA G 6.1 AS APPLICABLE.

BULK OIL STORAGE (SEE DETAILS ON R1.4 & R1.5):

- THE STORAGE OF BULK COOKING OILS FOR USE OR WASTE SHALL COMPLY WITH THE REQUIREMENTS OF THE 2021 INTERNATIONAL FIRE CODE SEC. 607 AND CHAPTER 57 AS REQUIRED FOR A CLASS IIIB LIQUID.
- STORAGE TANKS MUST BE INSTALLED ACCORDING TO SEC. 5704 OF THE IFC.

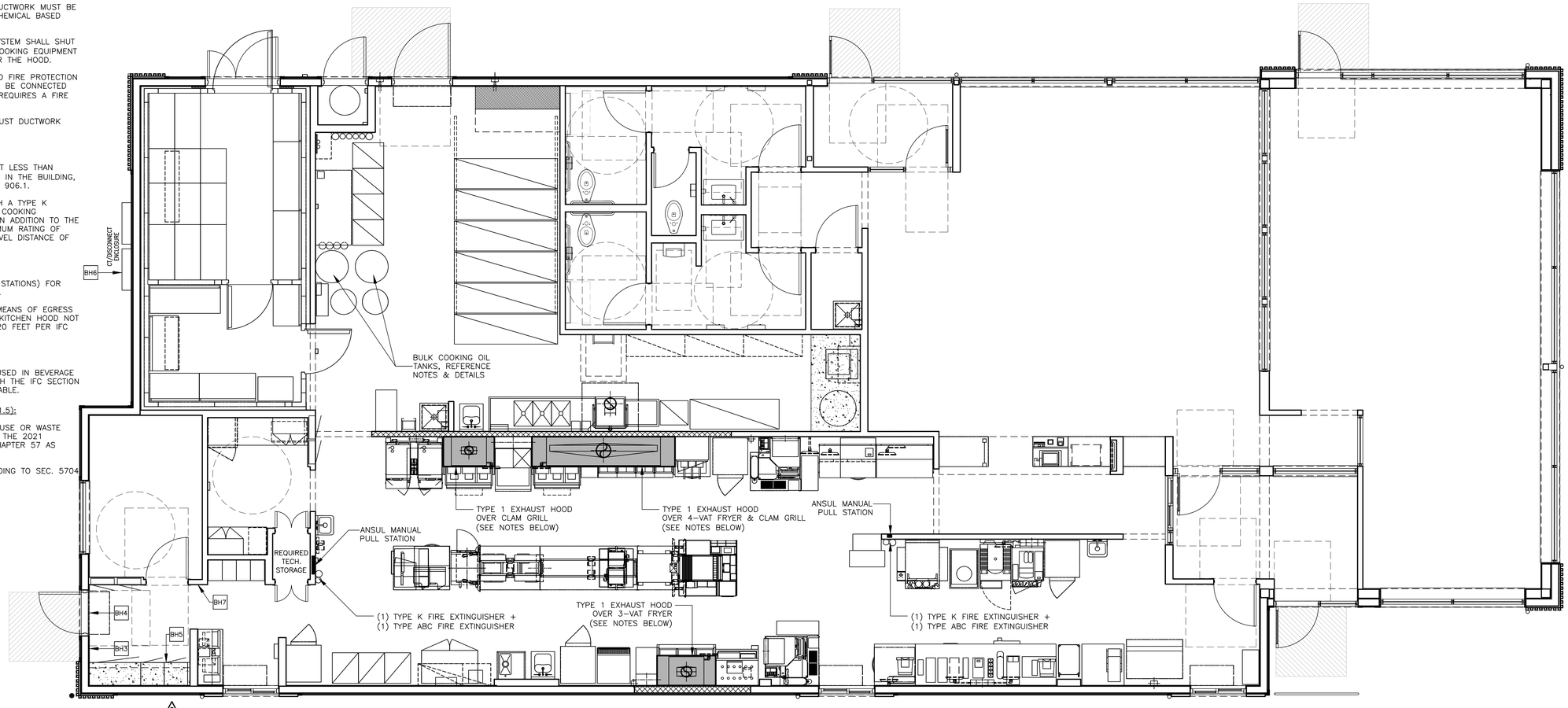

1 / R1.5 FLOOR PLAN
1/4"=1'-0"

Back Service Area

Signage Matrix

Keynote	Sign	Definition	Provider	Notes:
BH3	EXIT	Exit Sign	FRANKE/S2K	See ADA tactile character requirements in Appendix.
BH4	STOP BEFORE EXITING ALTO ANTES DE SALIR	Rear Door- Crew Safety Sign	FRANKE/S2K	See ADA visual character requirements in Appendix.
BH5	CAUTION STORE NOTHING IN FRONT OF POWER PANELS	Electrical Panel Warning Sign	FRANKE/S2K	See ADA visual character requirements in Appendix.
BH6	NOTICE EMERGENCY POWER CUT-OFF	Electrical Panel Info Sign	FRANKE/S2K	See ADA visual character requirements in Appendix.
BH7	CREW ROOM	Crew Room Sign (Optional)	FRANKE/S2K	See ADA tactile character requirements in Appendix.

Additional Signage

Safety | Additional Safety Signage

HIGHLY CONFIDENTIAL AND PROPRIETARY INFORMATION of McDonald's USA.

McDonald's Beverage System Layout

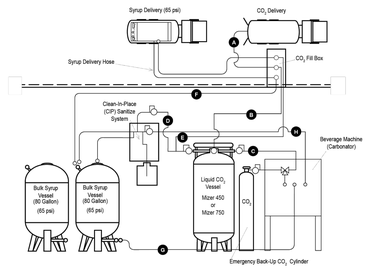

Item	Description	Function
A	CO_2 delivery truck fill line	Periodic transfer of liquid CO_2 to on-site Mizer storage vessel
B	In-Store CO_2 fill line	Transfer of CO2 from outside fill-box to Mizer storage vessel
C	CO_2 gas-use line to beverage machine carbonator	CO_2 gas supply at 90 -110 psi for beverage carbonation
D	CO_2 gas-use line to bulk syrup and CIP	CO_2 gas supply at 65 psi to push syrup to beverage machine
E	CO_2 gas-use line to fill box 2-pin connection	CO_2 gas supply at 65 psi to pressurize bulk syrup delivery
F	Syrup delivery line	Bulk syrup delivery line routed through fill box conduit
G	Syrup supply tubing	Transfers syrup from bulk storage vessel to beverage machine
H	Water supply line	Suplies water to beverage machine and sanitation (CIP) system
44	Syrup Side Gas Use Regulator (65 psi)	Controls CO_2 pressure to bulk syrup
45	Beverage Side Gas Use Regulator (90-125 psi)	Controls CO_2 gas pressure to carbonator

Copyright: Chart Industries, Inc., May 2003

Carbo-Mizer 450 / 750 Vessel Specifications

	Carbo-Mizer 450	Carbo-Mizer 750
Dimensions		
Diameter	20 in (50.8 cm)	26 in (66 cm)
Height	71.8 in (182.0 cm)	73.5 in (187 cm)
Empty Weight	273 lb (124 kg)	430 lb (195 kg)
Full Weight	726 lb (329 kg)	1201 lb (545 kg)
Net Volume	48 gal (182 liters)	82 gal (310 liters)
CO_2 Storage Capacity (saturated @125 psig [8.6 bar g])	453 lb (205 kg)	771 lb (350 kg)
Gas Use Connection	1/4" & 3/8" Hose Barb	1/4" & 3/8" Hose Barb
Fill Line Connection	5/8" Male 45° Flare	5/8" Male 45° Flare
Vent Line Connection	1/2" OD Tubing	1/2" OD Tubing
Rates and Pressures		
CO_2 Delivery Rate Continuous*	5.5 lb/hr (2.5 kg/hr) (489 - 16oz drinks / hr)	10 lb/hr (4.5 kg/hr) (889 - 16oz drinks / hr)
Peak CO_2 Delivery Rate. For One Hour*	10 lb/hr (4.5 kg/hr) (889 - 16 oz drinks)	18 lb/hr (8.2 kg/hr) (1600 - 16 oz drinks)
Evaporation Rate**	2.5 lb/day (1.1 kg/day)	3.0 lb/day (1.4 kg/day)
Max. Allowable Working Pressure (MAWP)	300 psig (20.7 bar g)	300 psig (20.7 bar g)
ASME Relief Setting	350 psig (20.7 bar g)	350 psig (20.7 bar g)
Additional. Relief Setting	450 psig (31.0 bar g)	450 psig (31.0 bar g)
Design Criteria	**Carbo-Mizer 450 & 750** (unless noted otherwise)	
Design Specifications	ASME Section VIII, Division 1	
Design Specifications	Meets with US and Canadian approvals	
Fill System	Single Line, pressure differential	
Patented Impurity Collection System	Mizer 450 only	
Insulation Type	Vacuum with Super Insulation	
Pressure Control	Pressure Building (PB) Circuit	
Liquid Level Gauge	Float Type: Magnetic 'Roto-Cal'	
Outer Vessel Material	Stainless Steel	
Inner Vessel Material	Stainless Steel	
Floor mount Design (Meets NSF standards)	Six-Inch Permanent Legs	

* Based on 11.25 lb of CO_2 / 1000 16 oz. drinks
** No loss in normal applications

Copyright: Chart Industries, Inc., May 2003

Vessel Parts Identification

McDONALD'S

Carbo-Mizer 450 P/N 11767303 Carbo-Mizer 750 P/N 11770676

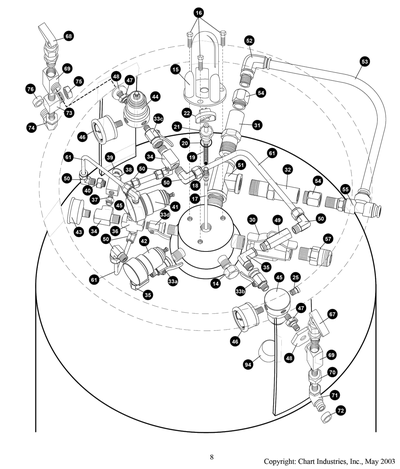

Copyright: Chart Industries, Inc., May 2003

REV	DATE	DESCRIPTION	BY
1	04/08/2025	COUNTY COMMENTS, M-O OC COMMENTS, & UTILITY COORDINATION	
2	05/09/2025	PLATPLACE ADDITION	

REGISTERED ARCHITECT JEREMY WILLIAMS 21926 STATE OF TEXAS

PREPARED BY:
JAW Architects, Inc.
Jeremy Williams, Architect
Phone: 817/926-3387
Email: jeremy@jaw-arch.com

PREPARED FOR:
McDonald's USA, LLC

© 2025 McDonald's USA, LLC

These drawings and specifications are the confidential and proprietary property of McDonald's USA, LLC and shall not be copied or reproduced without written authorization. The contract documents were prepared for use on the specific site and conditions with its issue date, and are not to be used for other projects or elsewhere at McDonald's. Reuse of these drawings for reference or example on another project requires the services of properly licensed architects and engineers. Reproductions of the contract documents for reuse on another project is not authorized.

DRAWN BY: JAW
STD ISSUE DATE: 2024
REVIEWED BY: JAW
DATE ISSUED: 10/11/2024

TITLE: 2024 STANDARD BUILDING – BB20 4584–WOOD/WOOD

DESCRIPTION
WOOD BEARING WALLS WITH HARDIE SIDING
WOOD ROOF TRUSS FRAMING
EIFS/BATTEN/METAL/HARDIE SIDING EXTERIOR FINISHES

SITE ID: 042–3591
SITE ADDRESS: NWC OF FM 460 & FM 740, FORNEY TEXAS

SHEET NO. R1.5
JAWA 24–0151
LIFE SAFETY PLAN

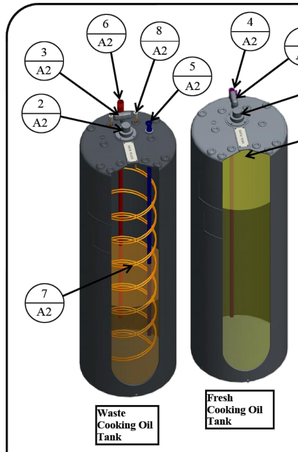

Tank Features (all tanks):

- Tanks provided with threaded inserts for securing tanks to floor.
- Tanks equipped with automatic overfill protection.
- Tanks equipped with normal and emergency vents.
- Waste cooking oil tank is heated using a copper coil heat exchanger through which warm water is circulated. This keeps waste oil at 90°F to 100°F.
- Fresh cooking oil tank is provided with a level gauge that reads in " pounds of oil."
- Space above tanks used for locating supporting equipment (pumps).
- Listed by NSF to ANSI/NSF Standard 4 for food products.
- Listed by Underwriter's Laboratories to UL 2152, *Special Purpose Nonmetallic Containers and Tanks for Specific Combustible of Noncombustible Liquids*.
- Meets requirements of 2020 New York State Fire Code and NFPA 30, Chapter 19.7, 2018 edition.

Equipment Spec
Standard Capacity Cooking Oil Storage Tanks
Seismic Zones 0 – 2B

RTI Part Number	11714828	11714121
Oil Type	Fresh	Waste
Capacity (at high level switch trip)	183 gallons (1,400 lbs)	183 gallons (1,400 lbs)
Head Space (at high level switch trip)	13 gallons (100 lbs)	13 gallons (100 lbs)
Seismic rating	Zones 0 – 2B	Zones 0 – 2B
Height	81"	81"
Diameter	28"	28"
Wall Thickness	0.250"	0.500"
Weight (empty)	82 lbs	142 lbs
Weight (full)	1,482 lbs	1,542 lbs
Vessel Material	Food-grade Polyethylene	
Installation Requirements	Tanks must be located indoors in an area that is adequately heated (always 60°F or warmer)	

1 EQUIPMENT SPECS - RTI COOKING OIL TRANKS

Liquid Level Switch & Normal Vent

The pictures below show the RTI Liquid Level Switch & Normal Vent. Both the high level shut-off switch and normal tank vent are combined in this device, which is installed in the top dead center of both tanks. The device covers a 4-1/8" diameter hole in the top of the tank.

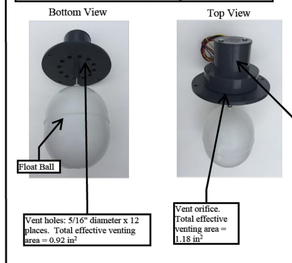

Where used, normal vents, including vent piping, that are smaller than 1.25 in. (32 mm) nominal inside diameter shall be tested to verify that internal tank pressures will remain below a gauge pressure of 0.5 psi (3.5 kPa) under maximum expected flow rates for tank filling and withdrawal. These tests shall be permitted to be conducted by a qualified outside agency or by the manufacturer, if certified by a qualified observer. 2015 NFPA 30, Section 19.7.2.3.3

The normal vent pictured here was tested by Underwriter's Laboratories and passed the requirements of NFPA 30. The UL listing mark on the tank serves as evidence of this. See UL file #MH49773 for details.

2 LIQUID LEVEL SWITCH & NORMAL VENT

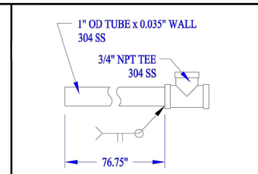

4 FILL/WITHDRAWAL DIP TUBE FRESH OIL TANK

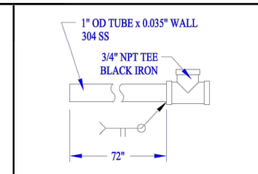

5 FILL DIP TUBE WASTE OIL TANK

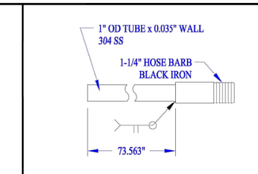

6 WITwithdrawal DIP TUBE WASTE OIL TANK

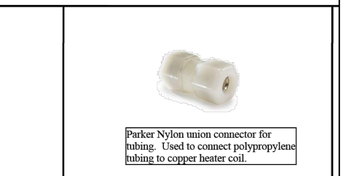

8 NYLON CONNECTOR FOR HEATER COIL: 11011645

Emergency Vent

Emergency Vent, 1" NPT
Manufactured by Morrison Brothers

Cooking oil storage tanks shall be provided with emergency relief venting in accordance with Chapter 22. 2015 NFPA 30, Section 19.7.2.4.1

The emergency vent pictured here was tested by Underwriter's Laboratories and passed the requirements of NFPA 30. The UL listing mark on the tank serves as evidence of this. See UL file #MH49773 for details.

3 EMERGENCY VENT

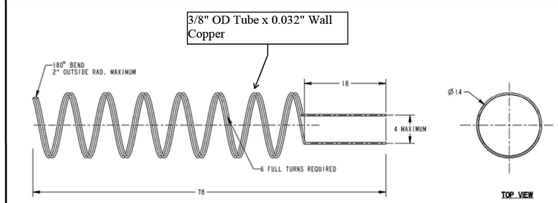

7 HEATER COIL - WASTE OIL TANK

NOTE: Minimum of 3 anchors required per tank.

Hilti Kwik Bolt TZ expansion anchor or equivalent
3/8"-16UNC x 3" long, galv. steel, with nut and washer
Ultimate pull-out strength = 2,300 lbs
Ultimate shear strength = 2,200 lbs
COLA and FM-Global approved, 2015 IBC compliant

13 MASONARY EXPANSION ANCHOR

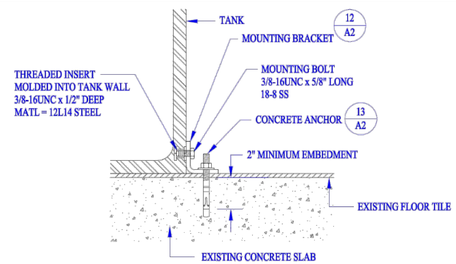

11 MOUNTING BRACKET AND EXPANSION ANCHOR DETAIL

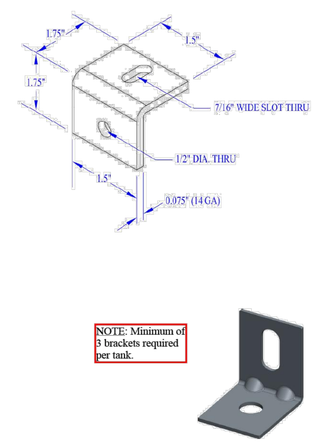

NOTE: Minimum of 3 brackets required per tank.

Seismic Rated for Zones 0 - 2B
RTI P/N: 11501337

12 MOUNTING BRACKET

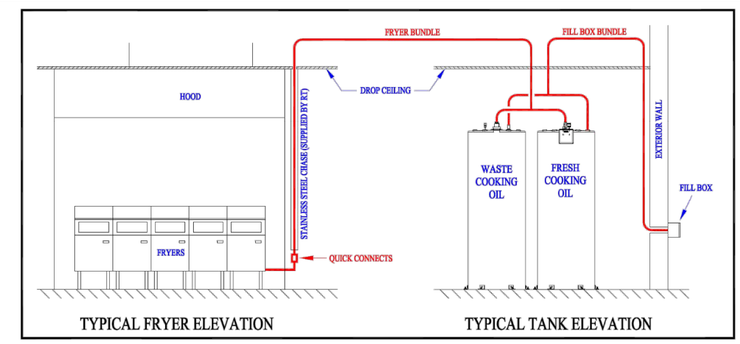

16 TANKS AND FRYERS - TYPICAL ELEVATION VIEW

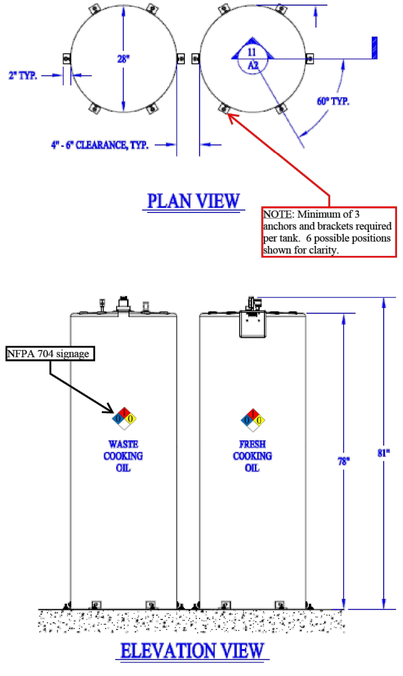

10 RT COOKING OIL TANKS - PLAN AND ELEVATION VIEWS

CERTIFICATE OF COMPLIANCE

Certificate Number: 20141210-MH49773
Report Reference: MH49773-20141210
Issue Date: 2014-DECEMBER-10

Issued to: Restaurant Technologies Inc
Suite 100
2250 Pilot Knob Rd
Mendota Heights MN 55120

This is to certify that representative samples of: ABOVEGROUND NONMETALLIC TANKS FOR COMBUSTIBLE AND NONCOMBUSTIBLE LIQUIDS

Aboveground Nonmetallic Tanks for Cooking Oils and Fats - Part Number 11714153, 11495352, 11714828, 11714121, 11714370, 11714373, 11714900, 11714972

Have been investigated by UL in accordance with the Standard(s) indicated on this Certificate.

Standard(s) for Safety: UL 2258, Nonmetallic Tanks for Oil-Burner Fuels and Other Combustible Liquids

Additional Information: See the UL Online Certifications Directory at www.ul.com/database for additional information

Only those products bearing the UL Certification Mark should be considered as being covered by UL's Certification and Follow-Up Service.

Look for the UL Certification Mark on the product.

Bradley

Bradley Wakefield, Assistant Chief Engineer, Global Inspection and Field Services

UL LLC

Any information and documentation involving UL Mark services are provided on behalf of UL LLC (UL) or any authorized licensee of UL. For questions, please contact a local UL Customer Service Representative at www.ul.com/contactus

15 UL CERTIFICATE OF COMPLIANCE

RTI Equipment Spec: CDC

RTI part number:	11716803
Primary purpose:	Displays contents of fresh oil tank and monitors restaurant equipment. Communicates this information to TOM website via *cellphone communication.*
Where located:	On top of fresh oil tank.

Specs:

- Dimensions: 7" tall x 7" wide x 2" deep
- Weight: 1 lb
- Power requirements: 120Vac, 60Hz, 0.6 amps.
- Power supply: Class 2 plug-in style transformer.
- Requires acceptable cellular signal strength. May not be able to be used in some locations if signal strength is not sufficient.
- Certifications: UL listed power supply.
- Additional features: Can monitor and communicate additional sensor information to website, like fryer filtration monitoring for example.

RESTAURANT TECHNOLOGIES
LOCAL CHANGE DRIVES GROWTH

Rev. 6/22/14

9 TELEMETRY FOR FRESH OIL

Fill Box Installed on Exterior Wall of Restaurant.

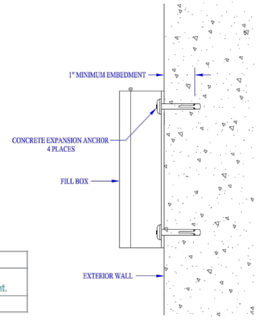

RTI Equipment Spec: Flush Mount Fill Box

RTI part number:	11604432
Primary purpose:	Connection point for delivery truck. Tanks filled/emptied through this point.
Where located:	On exterior wall of building.

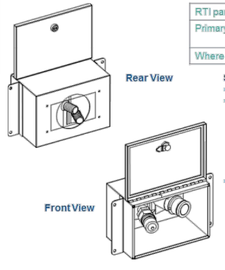

Specs:

- Dimensions: 7"H x 13"W (including flange) x 6" deep
- Features:
  - All stainless steel construction
  - Integral locking latch (key retained by RTI)
  - Food-grade new oil coupler
  - Incompatible waste oil coupler
  - Connection for overfill protection
  - Drip tray to catch residual oil
- Mounting details:
  - Flush mounted (protrudes 2" from surface of wall)
  - Required opening: 7-1/8"H x 10-1/4"W x 4" deep (if wall is thicker than 4", a 3" diameter hole is also required for remaining wall thickness)
  - Locate within 15 feet of waste oil tank (longer distances possible, but delivery times increase)
  - Locate away from drive-thru (if applicable)

Rev. 6/22/14

Rock River pin-drive concrete anchor
1/4" diameter x 1-1/2" long, zinc-plated steel
Ultimate pull-out strength = 1,200 lbs
Ultimate shear strength = 1,000 lbs
Meets of exceeds A-A 1925A, Type 1
2015 IBC compliant

14 FILL BOX - SURFACE MOUNT

REV	DATE	DESCRIPTION	BY
1	04/08/2025	COUNTY COMMENTS, M-O OC COMMENTS, & UTILITY COORDINATION	

REGISTERED ARCHITECT JEREMY WILLIAMS F1926 STATE OF TEXAS

PREPARED BY:
JAW Architects, Inc.
Jeremy Williams, Architect
Phone: 817/920-5387
Email: jeremy@jaw-arch.com

PREPARED FOR:
McDonald's USA, LLC

© 2026 McDonald's USA, LLC
Trade or trade secret information, the confidential and proprietary property of McDonald's USA, LLC and shall not be disclosed or reproduced without written authorization. The contract documents were prepared for use on this specific site in conjunction with its issue date and are not to be used for any other purpose or project. Reproduction of these drawings for reference or example on another project requires the approval of properly licensed architects and engineers. Reproduction of the contract documents for reuse on another project is not authorized.

DRAWN BY: JAW
STD. ISSUE DATE: 2024
REVIEWED BY: JAW
DATE ISSUED: 10/11/2024

TITLE: 2024 STANDARD BUILDING – BB20
4584–WOOD/WOOD

DESCRIPTION: WOOD BEARING WALLS WITH HARDIE SIDING
WOOD ROOF TRUSS FRAMING
EIFS/DATTEN/METAL/HARDIE SIDING EXTERIOR FINISHES

SITE ID: 042–3591
SITE ADDRESS: NWC OF FM 460 & FM 740, FORNEY TEXAS

SHEET NO.: JAWA 24–0151
R1.6
BULK OIL TANK DETAIL

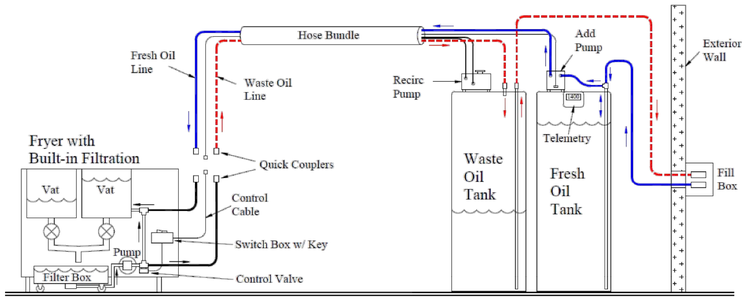

Restaurant Technologies Model BI-3F cooking oil system: for customers with built-in fryer oil filtration
- Adding oil, filtering oil, and disposing of spent oil accomplished through control valve and switch box installed on fryer.

① SYSTEM SCHEMATIC TANKS AND LINES

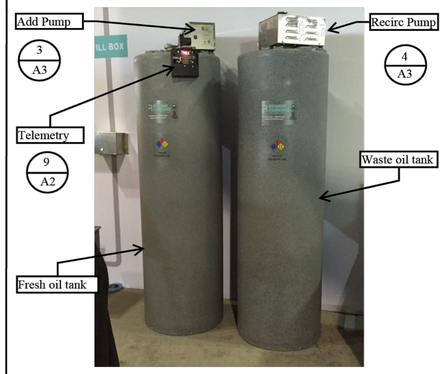

② PUMPS INSTALLED ON TOP OF TANKS

RTI Equipment Spec: Add Pump, Universal

RTI part number:	10984955
Primary purpose:	Pumps fresh cooking oil from oil tank to fryer.
Where located:	On top of fresh oil tank.

Specs:
- Dimensions: 18"L x 7.5"W x 8"H
- Weight: 35 lbs
- Power requirements: 120Vac, 60Hz, 7 amps.
- Power cord: 11' length with NEMA 5-15 plug.
- Flow rate: 4 GPM (~30 lbs/min).
- Certifications: ANSI/NSF-4 and UL-1889
- Additional features: Provides 24 Vac, Class 2 power signal to solenoid valve on fryer.

Rev. 9/23/14

③ EQUIPMENT SPEC, ADD PUMP

RTI Equipment Spec: Recirc Pump

RTI part number:	11715509
Primary purpose:	Recirculates warm water/glycol mix to keep oil lines and waste tank warm. Prevents cold oil from solidifying in lines, waste tank.
Where located:	On top of waste oil tank.

Specs:
- Dimensions: 14-1/2"L x 11-1/2"W x 8-1/2"H
- Weight: 20 lbs
- Power requirements: 120Vac, 60Hz, 11 amps.
- Power cord: 11' length with NEMA 5-15 plug.
- Flow rate: 4 GPM (~30 lbs/min).
- Certifications: ANSI/NSF-4 and UL-499
- Additional features: Thermostatically controlled and protected.

Rev. 9/23/14

④ EQUIPMENT SPEC, RECIRC PUMP

RTI Equipment Spec: Fryer Bundle

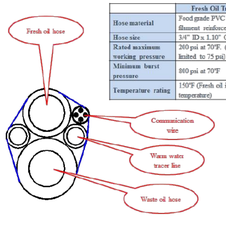

	Fresh Oil Transfer Hose	Waste Oil Transfer Hose
Hose material	Food-grade PVC with polyester filament reinforcement	Nitrile rubber with braided high tensile steel wire reinforcement
Hose size	3/4" ID x 1.10" OD	3/4" ID x 1.16" OD
Rated maximum working pressure	360 psi at 70°F. (RTI pump typically limited to 75 psi)	250 psi. (Fryer pump typically limited to 75 psi or less)
Minimum burst pressure	860 psi at 70°F	500 psi
Temperature rating	150°F (Fresh oil is always at room temperature)	275°F constant, 350°F intermittent (Oil transferred at 200°F or less)

The "fryer bundle" connects the RTI oil tanks to the restaurant fryers. This bundle is used whenever fresh oil is added to a fryer or used cooking oil is disposed of from a fryer.

Rev. 8/18/15

⑤ EQUIPMENT SPEC, FRYER BUNDLE

RTI Equipment Spec: Fill Box Bundle

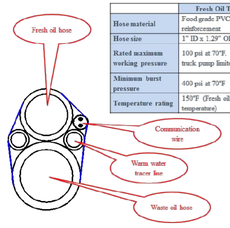

	Fresh Oil Transfer Hose	Waste Oil Transfer Hose
Hose material	Food-grade PVC with steel wire reinforcement	Food-grade PVC with steel wire reinforcement
Hose size	1" ID x 1.29" OD	1-1/4" ID x 1.56" OD
Rated maximum working pressure	100 psi at 70°F. (RTI delivery truck pump limited to 50 psi.)	70 psi at 70°F, and full vacuum at 70°F. (Hose used under vacuum conditions only in this application.)
Minimum burst pressure	400 psi at 70°F	280 psi at 70°F
Temperature rating	150°F (Fresh oil is always at room temperature)	150°F (Waste tank temperature typically 100°F)

The "fill box bundle" connects the RTI oil tanks to the fill box which is installed on an exterior wall of the building. This bundle is used during deliveries, where fresh oil is added and waste oil is removed from the RTI tanks.

Rev. 8/18/15

⑥ EQUIPMENT SPEC, FILL BOX BUNDLE

RTI Equipment Spec: All Bundles

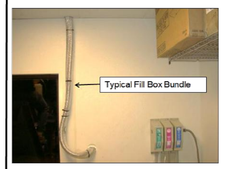

	Warm Water Tracer Line
Tube material	Linear low density polyethylene
Tube size	3/8" ID x 1/2" OD
Rated maximum working pressure	90 psi @ 150°F. (RTI pump limited to 18 psi or less)
Minimum burst pressure	270 psi @ 150°F
Temperature rating	180°F. (RTI pump limited to 140°F by regulating thermostat)

Communication Wire:
- Type = SJEOW cord, either 18 ga, 2-conductor or 18 ga, 4-conductor.
- Provides 24 Vac, Class 2 power between RTI equipment for signal purposes.

Outer Jacket:
- All bundles are wrapped in polyethylene stretch wrap to hold the hoses together and provide some insulating qualities.
- The grill grease bundle is covered with additional layer of polyethylene pipe insulation, approximately ½" thick.

Rev. 8/18/15

NOTE:
Bundles run in plenum rated spaces are enclosed in metal conduit or encapsulated with 3M Plenum Wrap.

⑦ EQUIPMENT SPEC, ALL BUNDLES

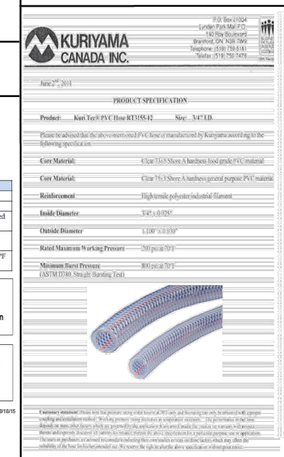

⑧ FRYER BUNDLE - CUT SHEETS FOR HOSES

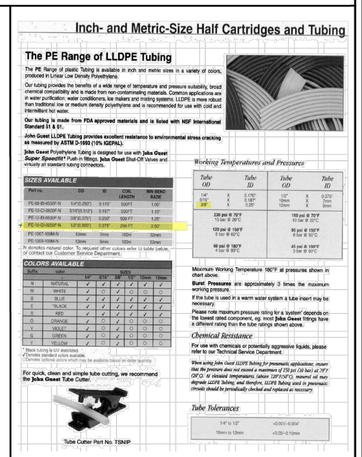

⑩ RECIRC TUBING - CUT SHEET

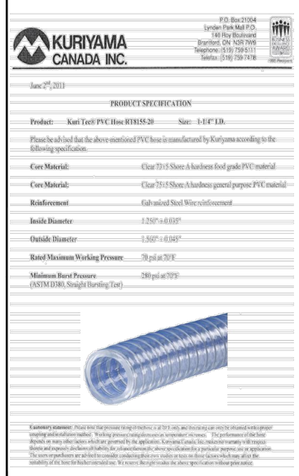

⑨ FILL BOX BUNDLE - CUT SHEET FOR HOSES

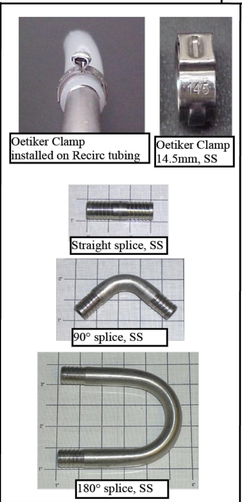

⑪ FITTINGS INSTALLED ON RECIRC LINES (BOTH ENDS)

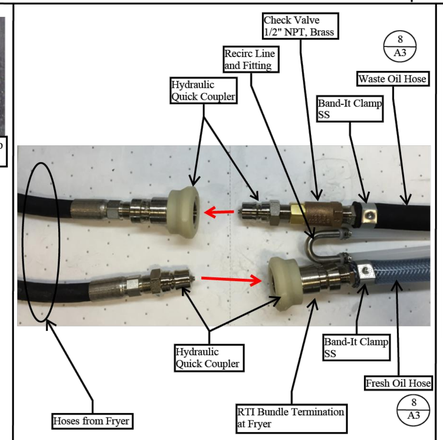

Band-It clamps are permanent type clamps rated for hose pressures and temperatures.

⑫ FITTINGS INSTALLED ON OIL HOSES

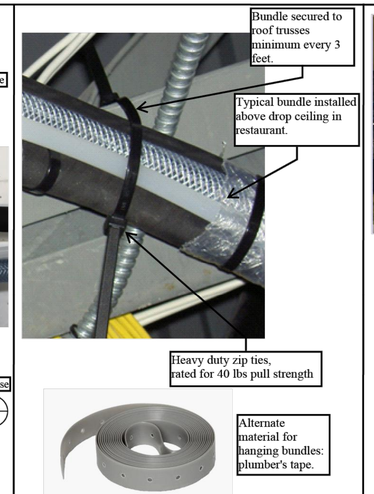

⑬ BUNDLE SUPPORT ABOVE DROP CEILING

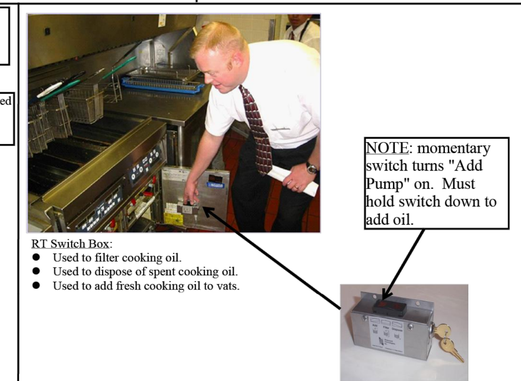

⑭ MOMENTARY SWITCH AT FRYER (CONTROLS ADD PUMP)

REV	DATE	DESCRIPTION	BY
1	04/08/2025	COUNTY COMMENTS, M-O, OC COMMENTS, & UTILITY COORDINATION	

REGISTERED ARCHITECT JEREMY WILLIAMS 21926 STATE OF TEXAS

JAW Architects, Inc.
Jeremy Williams, Architect
Phone: 817/705-3387
Email: jeremy@jaw-arch.com

PREPARED BY:

© 2025 McDonald's USA, LLC

PREPARED FOR: McDonald's USA, LLC

These drawings and specifications are the confidential and proprietary property of McDonald's USA, LLC and shall not be copied or reproduced without written authorization. The contract documents were prepared for use on this specific site and conform with its issue date and are subject to revision thereafter. Reproductions of or derivatives of these drawings for reference or example on another project required the services of properly licensed architects and engineers. Representations of these contract documents for resale or other purposes is not authorized.

DRAWN BY: JAW	STD ISSUE DATE: 2024
REVIEWED BY: JAW	DATE ISSUED: 10/11/2024

TITLE: 2024 STANDARD BUILDING – BB20
4584–WOOD/WOOD

DESCRIPTION	
WOOD BEARING WALLS WITH HARDIE SIDING	
WOOD ROOF TRUSS FRAMING	
EIFS/BATTEN/METAL/HARDIE SIDING EXTERIOR FINISHES	
SITE ID: CH2–3591	SITE ADDRESS: NWC OF FM 460 & FM 740, FORNEY TEXAS

JAWA 24–0151

SHEET NO. R1.7
BULK OIL TANK DETAIL

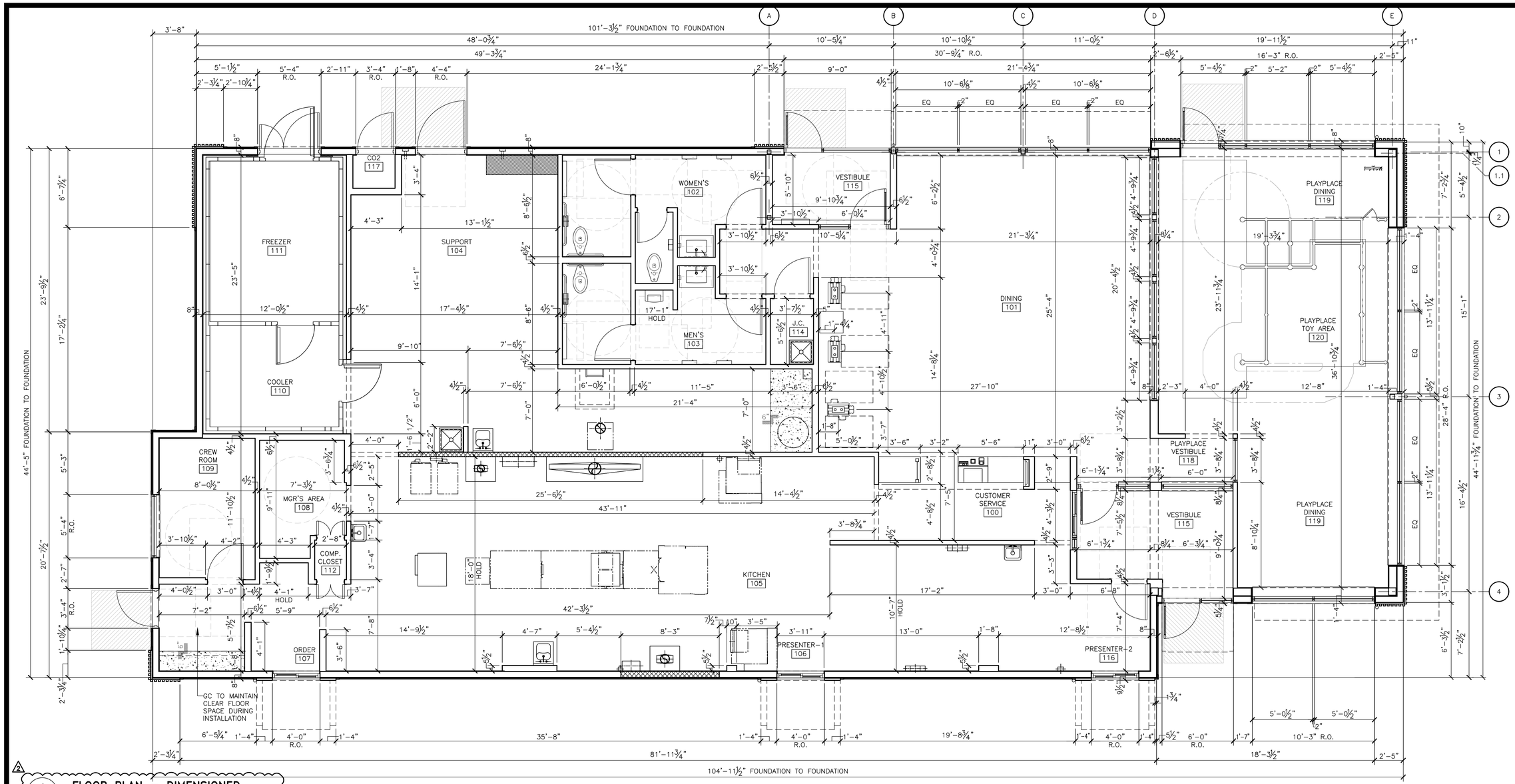

1 A1.0 **FLOOR PLAN – DIMENSIONED**
1/4"=1'-0"

KEY NOTES

- C — ALUMINUM CANOPY SYSTEM ABOVE – SEE 4/A5.0 FOR NOTES – SEE ROOF PLAN FOR DIMENSIONS, SEE ELEVATION FOR COLORS
- CG — G.C. TO PROVIDE 4"x4"x5'-0" HIGH STAINLESS STEEL CORNER GUARDS AT ALL EXPOSED LOCATIONS IN KITCHEN/SUPPORT AREA. CORNER GUARDS TO START AT FINISH FLOOR. ATTACH WITH SPECIALTY SCREW AND ANCHORS INTO TILE. BULLNOSE COVE BASE WHERE TILE MEETS STAINLESS STEEL CORNER.
- CP — CONCRETE EQMT PAD – SEE STRUCTURAL
- CT A — WALL FINISH: PER DECOR PORTFOLIO SEE A3.1 AND A6.1 FOR FINISH INFORMATION
- CT B — WALL TILE: CROSSVILLE – COLOR BY NUMBERS COLOR: AFTERNOON SPRAY, SIZE: 4"x12", PATTERN: STACKED BOND GROUT: MAPEI 02 PEWTER – JOINT TO BE 1/16" MAX. USE THIS TILE WHEN HIGH LRV IS REQUIRED COORDINATE WITH McDONALD'S AREA CONSTRUCTION MANAGER
- DO — DOWNSPOUT CONNECTED TO CANOPY SYSTEM. SEE ELEVATIONS. COORDINATE CONNECTION WITH CIVIL.
- DS — DROPPED SOFFIT ABOVE – SEE REFLECTED CEILING PLAN
- D# — DECOR PORTFOLIO SPECIFIC ELEMENT – SEE FINISH SCHEDULE.
- FB CO2 — CO2 FILL BOX (EQUIPMENT SCHEDULE ITEM 49.00)
- FB BO — OPTIONAL BULK OIL FILL BOX (EQPM SCHEDULE ITEM 700.18) CONFIRM USE WITH MCDONALD'S AREA CONSTRUCTION MANAGER
- IF — IMPACT FLOORING – COORDINATE WITH TOY PROVIDER. REFER TO McDONALD'S PROJECT MANUAL
- FL — FLOOR LINE – CHANGE IN MATERIAL – SEE DECOR DRAWINGS
- FP — FIBERGLASS REINFORCED PLASTIC (FRP) – PANOLAM, GRAY SMOOTH, CLASS A, .075. REFER TO ROOM FINISH SCHEDULE SHEET A6.1 FOR INSTALLATION LOCATIONS. FOR ORDERING, CONTACT KIMBERLY LAWSON Kimberly_Lawson@panolam.com 1-866-925-4377
- LL — LEVEL LANDING @ EXT. DOOR W/ MAX. 2% RUNNING/CROSS SLOPE AWAY FROM BUILDING
  - 5'x5' — SIZE OF LANDING
- LW — LATE-NIGHT WINDOW (OPTIONAL) BY READYACCESS, MANUAL OPEN/SELF CLOSE. SEE SHEET A3.1 FOR NOTES.
- MS — MOP SINK – SEE DETAIL 8/A6.1 AND PLUMBING DRAWINGS.
- RL — ROOF ACCESS LADDER W/HATCH ABOVE SEE STRUCTURAL FRAMING PLAN FOR LOCATING DIMENSIONS
- AL — ALUMINUM BATTEN SYSTEM. REFERENCE DETAIL 16/A4.1
- W# — EXTERIOR WINDOW ASSEMBLY – TEMPERED GLASS SEE ELEVATIONS FOR COLOR SEE SHEET A6.0

SYMBOL LEGEND

- (A) — PARTITION TYPE TAG SEE 2/A1.1
- (?) — DOOR TAG – SEE DOOR SCHEDULE ON A6.0
- X — KEY NOTE
- DRAFT STOPPING SEE 2/A1.2

GENERAL NOTES

1. EXTERIOR DIMENSIONS ARE TO COLUMN REFERENCE LINES AND EXTERIOR FACE OF FOUNDATION UNLESS OTHERWISE NOTED. INTERIOR DIMENSIONS ARE TO FACE OF INTERIOR WALL BOARD
2. SEE 4/A5.0 FOR EXTERIOR WALL ASSEMBLY TYPES. SEE 2/A1.1 FOR INTERIOR PARTITION TYPES. INTERIOR PARTITIONS ARE TYPE 'A' UNLESS NOTED OTHERWISE.
3. SEE EXTERIOR ELEVATIONS FOR WINDOW TYPES
4. SEE SHEET A6.0 FOR DOOR AND ROOM FINISH SCHEDULES
5. SEE SITE PLAN FOR SIDEWALKS, RAMPS, ETC.
6. GC TO PROVIDE MAXIMUM OCCUPANCY SIGN AND ADA SIGNAGE PACKAGE AND INSTALL SIGNS AT LOCATIONS AND POSITIONS INDICATED IN PACKAGE OR AS REQUIRED BY LOCAL CODES. SIGNAGE PACKAGE SUPPLIED BY: FRANKE/S2K 1-800-423-5247 www.frankesupply.com email: fs-frankesupply.us@franke.com
7. ALL HANDSINK LOCATIONS SHALL HAVE CEMENT BOARD BACKING 48" IN HEIGHT A.F.F.
8. GC TO COORDINATE ALL REQUIRED BLOCKING FOR WALL HUNG EQUIPMENT, SHELVES, ETC. FOR PROPER INSTALLATION HEIGHTS.
9. KNOX BOX TO BE INSTALLED PER LOCAL CODE AS REQUIRED. MODEL AND LOCATION TO BE COORDINATED WITH FIRE MARSHALL.

REV	DATE	DESCRIPTION	BY
1	04/08/2025	COUNTY COMMENTS, M/O OC COMMENTS, & UTILITY COORDINATION	
2	05/09/2025	PLAYPLACE ADDITION	

REGISTERED ARCHITECT JEREMY WILLIAMS 21926 STATE OF TEXAS

PREPARED BY: JAW Architects, Inc. Jeremy Williams, Architect Phone: 817/702-3387 Email: jeremy@jaw-arch.com

PREPARED FOR: McDonald's USA, LLC

© 2025 McDonald's USA, LLC
These drawings and specifications are the confidential and proprietary property of McDonald's USA, LLC and shall not be copied or reproduced without written authorization. The contract documents were prepared for use on this specific site in conjunction with the issue date and are not suitable for use on other sites. If these documents are used for bidding, these drawings for reference or example on another project requires the services of professional architects and engineers. Reproduction of the contract documents for reuse on another project is not authorized.

DRAWN BY: JAW | STD ISSUE DATE: 2024 | REVIEWED BY: JAW | DATE ISSUED: 10/11/2024

TITLE: 2024 STANDARD BUILDING – BB20 4584-WOOD/WOOD

DESCRIPTION: WOOD BEARING WALLS WITH HARDIE SIDING; WOOD ROOF TRUSS FRAMING; EIFS/BATTEN/METAL/HARDIE SIDING EXTERIOR FINISHES

SITE ID: 042-3591 | SITE ADDRESS: NWC OF FM 460 & FM 740, FORNEY TEXAS

SHEET NO. JAWA 24-0151 **A1.0** FLOOR PLAN

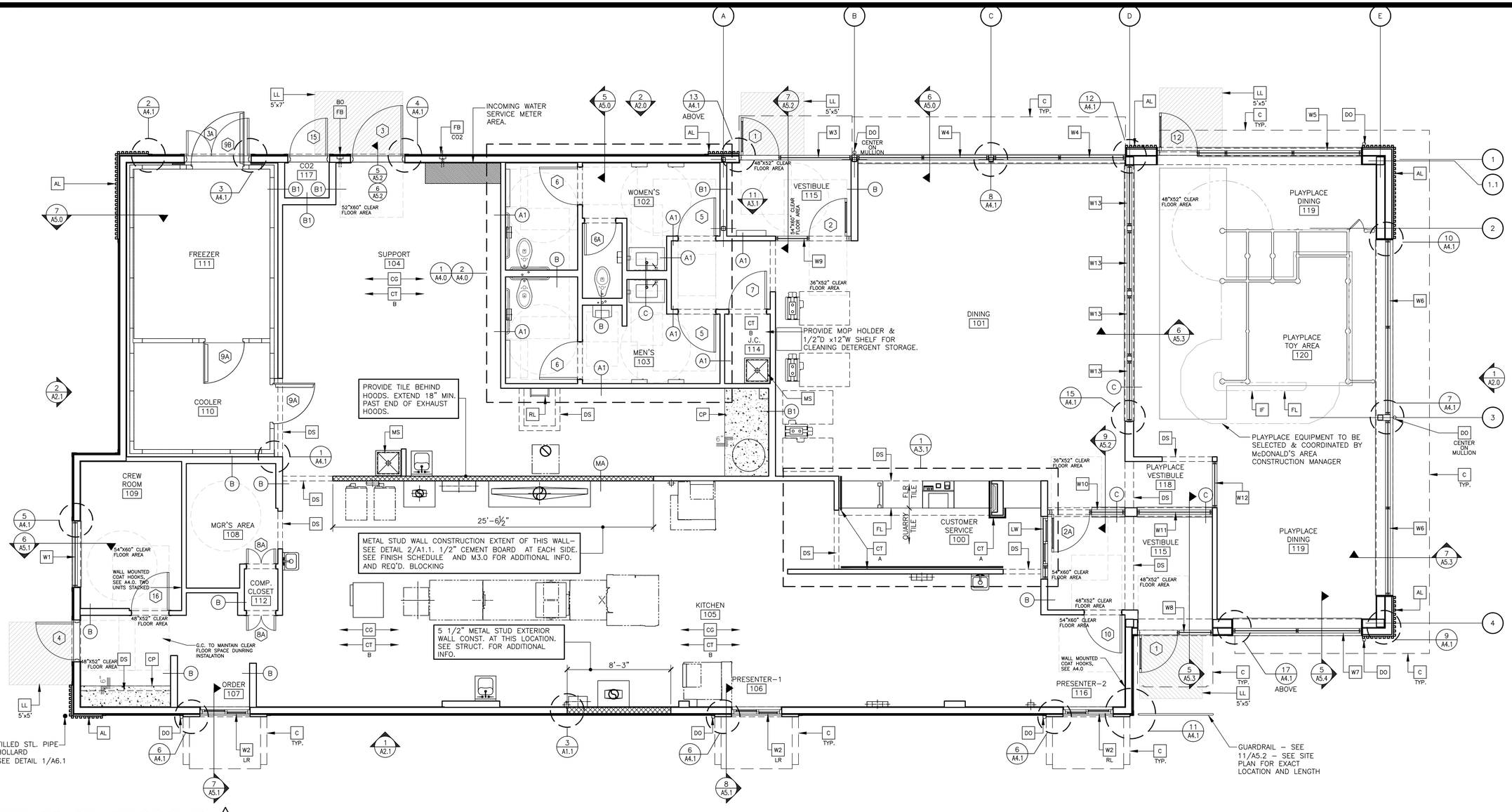

1 A1.1 FLOOR PLAN – NOTED
1/4"=1'-0"

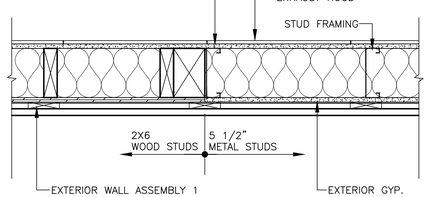

3 A1.1 TRANSITON DETAIL
1 1/2"=1'-0"

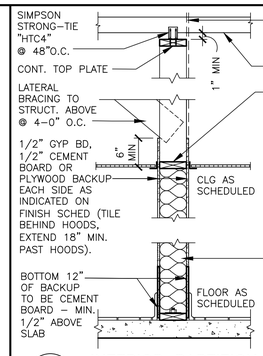

METAL STUD PARTITION TYPE:
"MA" = 3 5/8"
SPACING: 16" O.C.
STUD GUAGE:
LOAD BEARING: 18
NON-LOAD BEARING: 20

WOOD STUD PARTITION TYPE:
ALL PARTITIONS TYPE 'A' UNLESS NOTED OTHERWISE
"A" = 2x4
"A1"= 2x4 W/ SOUND BATT INS.
"B" = 2x6
"B1"= 2x6 W/ SOUND BATT INS.
"C" = 2x8
"C1"= 2x8 W/ SOUND BATT INS.
"D1" = SEE DTL 3/A1.1
(EQUIVALENT LIGHT GAUGE METAL STUDS ALSO ACCEPTABLE)

TYPICAL STUD SPACING: 16" O.C.

2 A1.1 INTERIOR PARTITION
3/4"=1'-0"

KEY NOTES

- C — ALUMINUM CANOPY SYSTEM ABOVE – SEE 4/A5.0 FOR NOTES – SEE ROOF PLAN FOR DIMENSIONS, SEE ELEVATION FOR COLORS
- CG — G.C. TO PROVIDE 4"x4"x5'-0" HIGH STAINLESS STEEL CORNER GUARDS AT ALL EXPOSED LOCATIONS IN KITCHEN/SUPPORT AREA. CORNER GUARDS TO START AT FINISH FLOOR. ATTACH WITH SPECIALTY SCREW AND ANCHORS INTO TILE. BULLNOSE COVE BASE WHERE TILE MEETS STAINLESS STEEL CORNER.
- CP — CONCRETE EQMT PAD – SEE STRUCTURAL
- CT A — WALL FINISH: PER DECOR PORTFOLIO SEE A3.1 AND A6.1 FOR FINISH INFORMATION
- CT B — WALL TILE: CROSSVILLE – COLOR BY NUMBERS COLOR: AFTERNOON SPRAY, SIZE: 4"x12", PATTERN: STACKED BOND GROUT: MAPEI 02 PEWTER – JOINT TO BE 1/16" MAX. USE THIS TILE WHEN HIGH LRV IS REQUIRED COORDINATE WITH McDONALD'S AREA CONSTRUCTION MANAGER
- DO — DROPPED SOFFIT ABOVE – SEE REFLECTED CEILING PLAN
- DS — DECOR PORTFOLIO SPECIFIC ELEMENT – SEE FINISH SCHEDULE.
- FB CO2 — CO2 FILL BOX (EQUIPMENT SCHEDULE ITEM 49.00)
- FB BO — OPTIONAL BULK OIL FILL BOX (EQPM SCHEDULE ITEM 700.18) CONFIRM USE WITH MCDONALD'S AREA CONSTRUCTION MANAGER
- IF — IMPACT FLOORING – COORDINATE WITH TOY PROVIDER. REFER TO McDONALD'S PROJECT MANUAL
- FL — FLOOR LINE – CHANGE IN MATERIAL – SEE DECOR DRAWINGS
- FP — FIBERGLASS REINFORCED PLASTIC (FRP) – PANOLAM, GRAY SMOOTH, CLASS A, .075. REFER TO ROOM FINISH SCHEDULE SHEET A6.1 FOR INSTALLATION LOCATIONS. FOR ORDERING, CONTACT KIMBERLY LAWSON Kimberly_Lawson@panolam.com 1-866-925-4377
- LL 5'x5' — LEVEL LANDING @ EXT. DOOR W/ MAX. 2% RUNNING/CROSS SLOPE AWAY FROM BUILDING; SIZE OF LANDING
- LW — LATE-NIGHT WINDOW (OPTIONAL) BY READYACCESS, MANUAL OPEN/SELF CLOSE. SEE SHEET A3.1 FOR NOTES.
- MS — MOP SINK – SEE DETAIL 8/A6.1 AND PLUMBING DRAWINGS.
- RL — ROOF ACCESS LADDER W/HATCH ABOVE SEE STRUCTURAL FRAMING PLAN FOR LOCATING DIMENSIONS
- AL — ALUMINUM BATTEN SYSTEM. REFERENCE DETAIL 16/A4.1
- W# — EXTERIOR WINDOW ASSEMBLY – TEMPERED GLASS SEE ELEVATIONS FOR COLOR SEE SHEET A6.0

SYMBOL LEGEND

- A — PARTITION TYPE TAG SEE 2/A1.1
- ? — DOOR TAG – SEE DOOR SCHEDULE ON A6.0
- X — KEY NOTE
- DRAFT STOPPING SEE 2/A1.2

GENERAL NOTES

1. EXTERIOR DIMENSIONS ARE TO COLUMN REFERENCE LINES AND EXTERIOR FACE OF FOUNDATION UNLESS OTHERWISE NOTED. INTERIOR DIMENSIONS ARE TO FACE OF INTERIOR WALL BOARD
2. SEE 4/A5.0 FOR EXTERIOR WALL ASSEMBLY TYPES. SEE 2/A1.1 FOR INTERIOR PARTITION TYPES. INTERIOR PARTITIONS ARE TYPE 'A' UNLESS NOTED OTHERWISE.
3. SEE EXTERIOR ELEVATIONS FOR WINDOW TYPES
4. SEE SHEET A6.0 FOR DOOR AND ROOM FINISH SCHEDULES
5. SEE SITE PLAN FOR SIDEWALKS, RAMPS, ETC.
6. GC TO PROVIDE MAXIMUM OCCUPANCY SIGN AND ADA SIGNAGE PACKAGE AND INSTALL SIGNS AT LOCATIONS AND POSITIONS INDICATED IN PACKAGE OR AS REQUIRED BY LOCAL CODES. SIGNAGE PACKAGE SUPPLIED BY: FRANKE/S2K 1-800-423-5247 www.frankesupply.com email: fs-frankesupply.us@franke.com
7. ALL HANDSINK LOCATIONS SHALL HAVE CEMENT BOARD BACKING 48" IN HEIGHT A.F.F.
8. GC TO COORDINATE ALL REQUIRED BLOCKING FOR WALL HUNG EQUIPMENT, SHELVES, ETC. FOR PROPER INSTALLATION HEIGHTS.
9. KNOX BOX TO BE INSTALLED PER LOCAL CODE AS REQUIRED. MODEL AND LOCATION TO BE COORDINATED WITH FIRE MARSHALL.

REV	DATE	DESCRIPTION	BY
1	04/08/2025	COUNTY COMMENTS, M/O OC COMMENTS, & UTILITY COORDINATION	
2	05/09/2025	PLAYPLACE ADDITION	

PREPARED FOR: McDonald's USA, LLC

© 2025 McDonald's USA, LLC

Trees of origins and specifications are the confidential and proprietary property of McDonald's USA, LLC and shall not be copied or reproduced without written authorization. The contract documents were prepared for use on this specific site in conjunction with the laws and ordinances applicable to that site at the time of construction. Use of these drawings for reference or example on another project requires the services of professional architects and engineers. Reproduction of the contract documents for reuse on another project is not authorized.

PREPARED BY: JAW Architects, Inc. Jeremy Williams, Architect
Phone: 817.705.5387
Email: jeremy@jaw-arch.com

DRAWN BY: JAW
STD ISSUE DATE: 2024
REVIEWED BY: JAW
DATE ISSUED: 10/11/2024

TITLE: 2024 STANDARD BUILDING – BB20 4584-WOOD/WOOD
DESCRIPTION: WOOD BEARING WALLS WITH HARDIE SIDING WOOD ROOF TRUSS FRAMING EIFS/BATTEN/METAL/HARDIE SIDING EXTERIOR FINISHES
SITE ID: 042-3591
SITE ADDRESS: NWC OF FM 460 & FM 740, FORNEY TEXAS

JAWA 24-0151

SHEET NO. A1.1
FLOOR PLAN

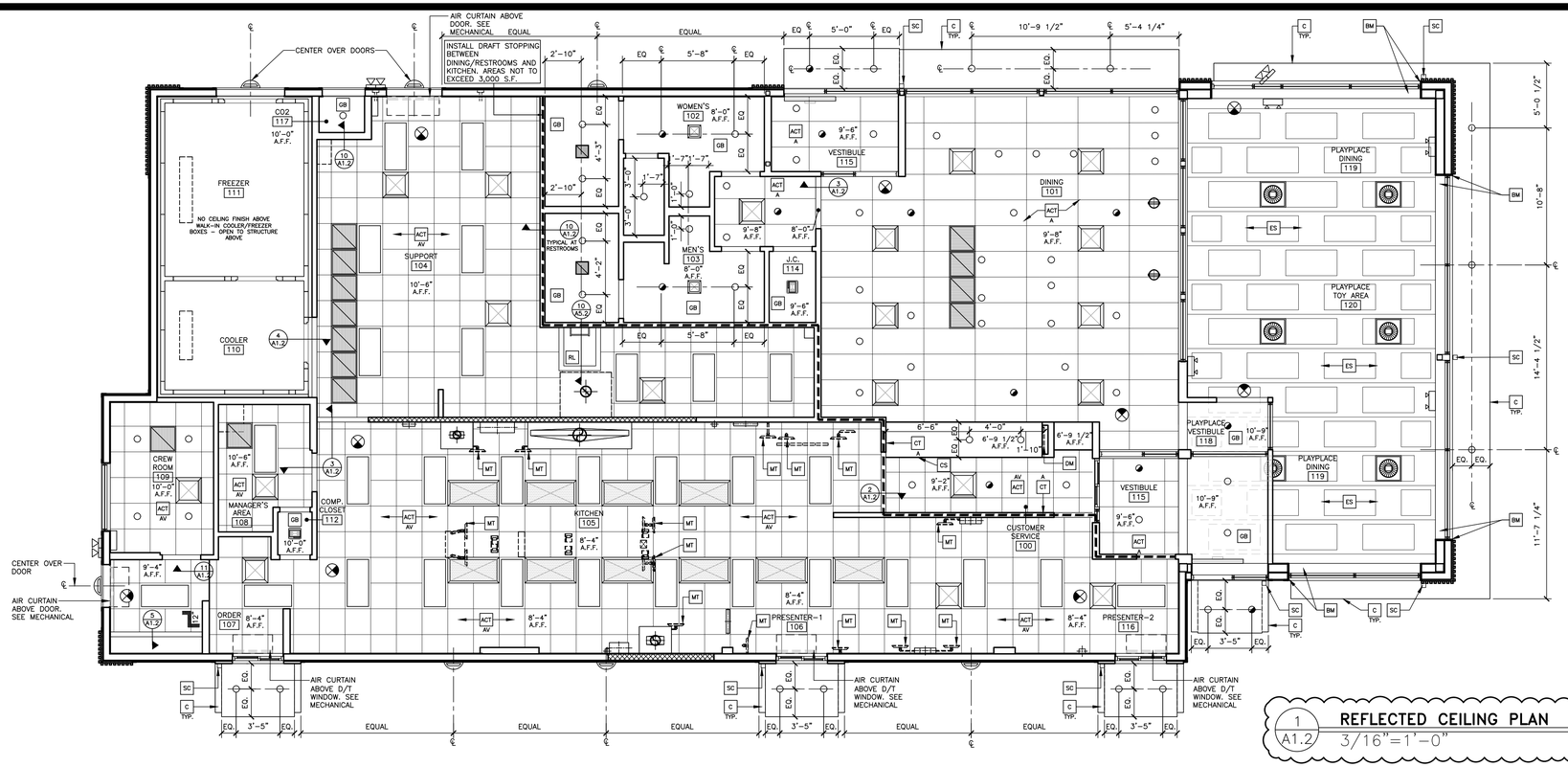

1 A1.2 **REFLECTED CEILING PLAN**
3/16"=1'-0"

KEY NOTES

ACT A	ACOUSTICAL CEILING TILE – 24"X48". SEE FINISH SCHEDULE (USE 24"X24" TILES IN CREW ROOM AND OFFICE)
ACT AV	ACOUSTICAL CEILING TILE: VINYL FACED USG 24"X24" CLEAN ROOM CLIMA–PLUS. UNPERFORATED. SMOOTH TEXTURE COLOR: WHITE GRID:USG 15/16" DX/DXL COLOR: WHITE
BM	BRAKE METAL TRIM COLOR: GOLD
C	ALUMINUM CANOPY WITH INTEGRAL GUTTER AND SCUPPER – SEE 4/A5.0 FOR NOTES – SEE ROOF PLAN FOR DIMENSIONS – SEE ELEVATION FOR COLOR
CS	GC BUILT SOFFIT OVER FRONT COUNTER PROVIDE FINISHES PER DECOR DRAWINGS
CT A	WALL TILE: PER DECOR PORTFOLIO SEE A3.1 AND A6.1 FOR FINISH INFORMATION.
CT B	WALL TILE: CROSSVILLE – COLOR BY NUMBERS COLOR: AFTERNOON SPRAY, SIZE: 4"x12", PATTERN: STACKED BOND GROUT: MAPEI 02 PEWTER – JOINT TO BE 1/16" MAX. USE THIS TILE WHEN HIGH LRV IS REQUIRED COORDINATE WITH McDONALD'S AREA CONSTRUCTION MANAGER
DC	SUSPENDED DECORATIVE CEILING TREATMENT – SEE DECOR DRAWINGS FOR ADDITIONAL INFORMATION
DM	DIGITAL MERCHANDISER
DS	DROPPED SOFFIT
DC–WH	BOTTOM TO ALIGN WITH GYP BD AT EXTERIOR WINDOW HEAD MAY BE REPLACED BY ELEMENT BY DECOR SUPPLIER – CONFIRM WITH AREA CONSTRUCTION MANAGER
D#	DECOR PORTFOLIO SPECIFIC ELEMENT – SEE FINISH SCHEDULE.
ES	EXPOSED STRUCTURE ABOVE – UNDERSIDE OF DECK AND JOISTS TO BE PAINTED "BRIGHT WHITE", ALL EXPOSED ENDS OF ROOFING FASTENERS TO BE CLIPPED ACOUSTICAL CEILING PANELS TO BE MOUNTED ON UNDERSIDE OF ROOF DECKING – CENTER PANELS BETWEEN TRUSSES, EVENLY SPACED, COORDINATE AND AVOID LIGHT FIXTURE POSITIONING MANUFACTURER: ACOUSTICAL SURFACES, INC. (OR EQUAL) PRODUCT: ECHO ELIMINATOR EE224W3 (OR EQUAL)
GB	GYPSUM BOARD CEILING FINISH. SEE DECOR.
MT	CEILING MOUNTED MONITOR: A) VERIFY MONITOR LOCATIONS WITH McDONALD'S PROJECT MANAGER PRIOR TO INSTALLATION. B) SEE DETAIL 6/A1.2 FOR INSTALLATION METHOD
RL	ROOF LADDER OPENING
SC	INTERGRAL GUTTER SCUPPER

GENERAL NOTES

1. SEE SHT A6.1 FOR CEILING FINISHES.
2. GENERAL CONTRACTOR SHALL COORDINATE HVAC DIFFUSER LOCATION WITH DECOR & MECHANICAL PLANS AND REPORT ANY DISCREPANCIES TO ARCHITECT.
3. REFERENCE MECHANICAL AND ELECTRICAL DRAWINGS FOR DIFFUSER AND LIGHTING INFORMATION.
4. PROVIDE USG V15 CEILING TILE RETENTION CLIPS IN ALL VESTIBULE AREAS

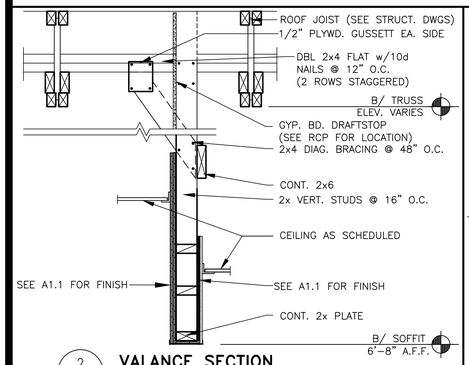

2 A1.2 **VALANCE SECTION**
1"=1'-0"

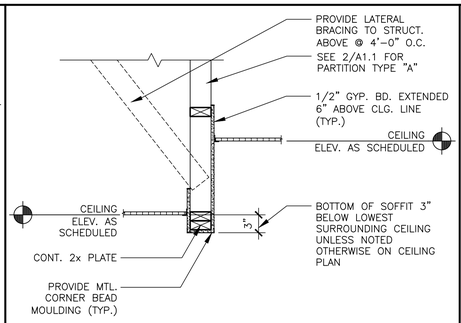

3 A1.2 **CEILING TRANSITION w/ SOFFIT**
1"=1'-0"

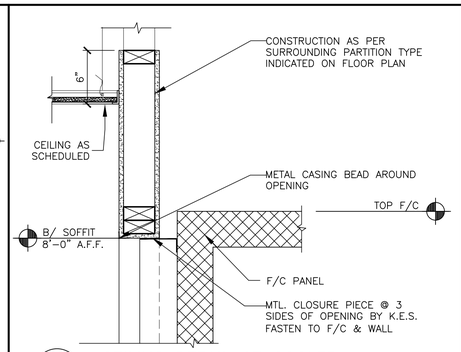

4 A1.2 **CEILING DETAIL AT COOLER**
1 1/2"=1'-0"

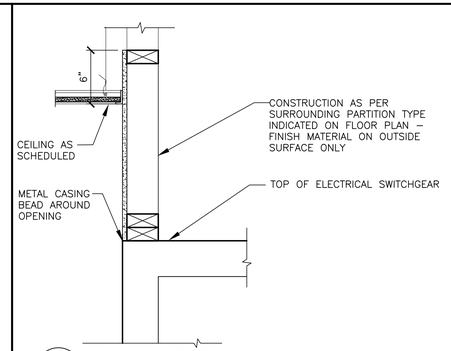

5 A1.2 **CEILING DETAIL AT SWITCHGEAR**
1 1/2"=1'-0"

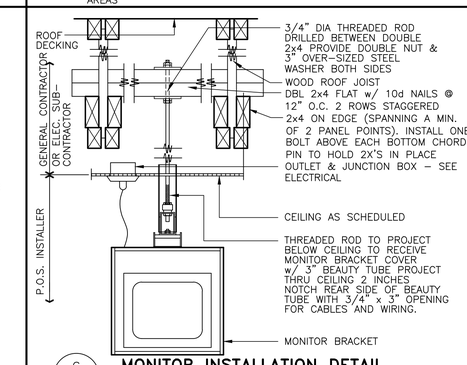

6 A1.2 **MONITOR INSTALLATION DETAIL**
N.T.S.

7 A1.2 **NOT USED**
–

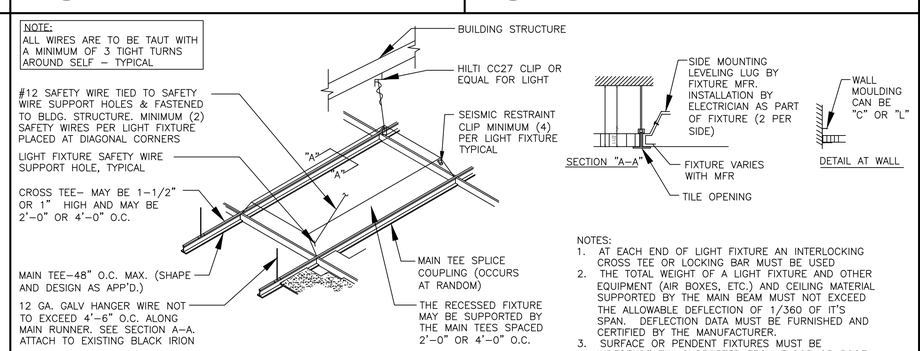

8 A1.2 **CEILING GRID & LIGHT SUPPORT DETAIL**
N.T.S.

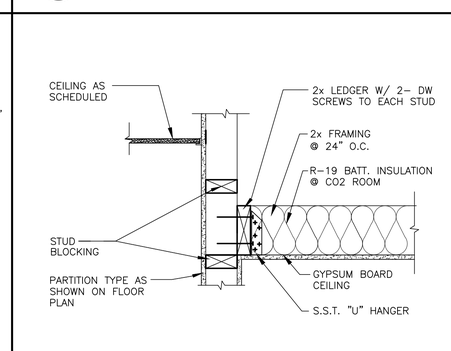

10 A1.2 **GYP BD CEILING DETAIL**
1 1/2"=1'-0"
A0610WB1

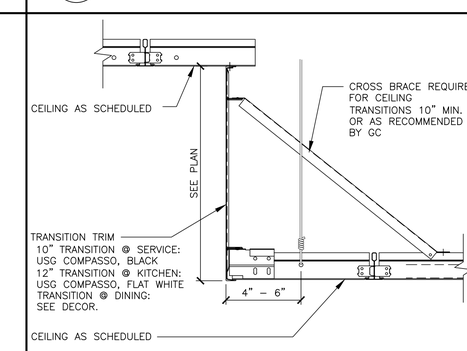

11 A1.2 **ACOUSTIC CEILING TRANSITION**
N.T.S.
COORDINATE w/ DECOR

REV	DATE	DESCRIPTION	BY
1	04/08/2025	COUNTY COMMENTS, M/O OC COMMENTS, & UTILITY COORDINATION	
2	05/09/2025	PLAYPLACE ADDITION	

PREPARED BY:
JAW Architects, Inc.
Jeremy Williams, Architect
Phone: 817/920-3387
Email: jeremy@jaw-arch.com

REGISTERED ARCHITECT JEREMY WILLIAMS 21926 STATE OF TEXAS

PREPARED FOR:
McDonald's USA, LLC

© 2024 McDonald's USA, LLC
These drawings and specifications are the confidential and proprietary property of McDonald's USA, LLC and shall not be copied or reproduced without written authorization. The contract documents were prepared for use on this specific site in conjunction with its issue date and are not suitable for use on other projects or sites. Re-use of these drawings for reference or example on another project requires the review of properly licensed architects and engineers. Reproduction of the contract documents for re-use on another project is not authorized.

DRAWN BY JAW
STD ISSUE DATE 2024
REVIEWED BY JAW
DATE ISSUED 10/11/2024

TITLE: 2024 STANDARD BUILDING – BB20 4584–WOOD/WOOD
DESCRIPTION: WOOD BEARING WALLS WITH HARDIE SIDING
WOOD ROOF TRUSS FRAMING
EIFS/GATEN/METAL/HARDIE SIDING EXTERIOR FINISHES
SITE ID: 042–3591
SITE ADDRESS: NWC OF FM 460 & FM 740, FORNEY TEXAS

SHEET NO. JAWA 24–0151
A1.2
REFLECTED CLG. PLAN

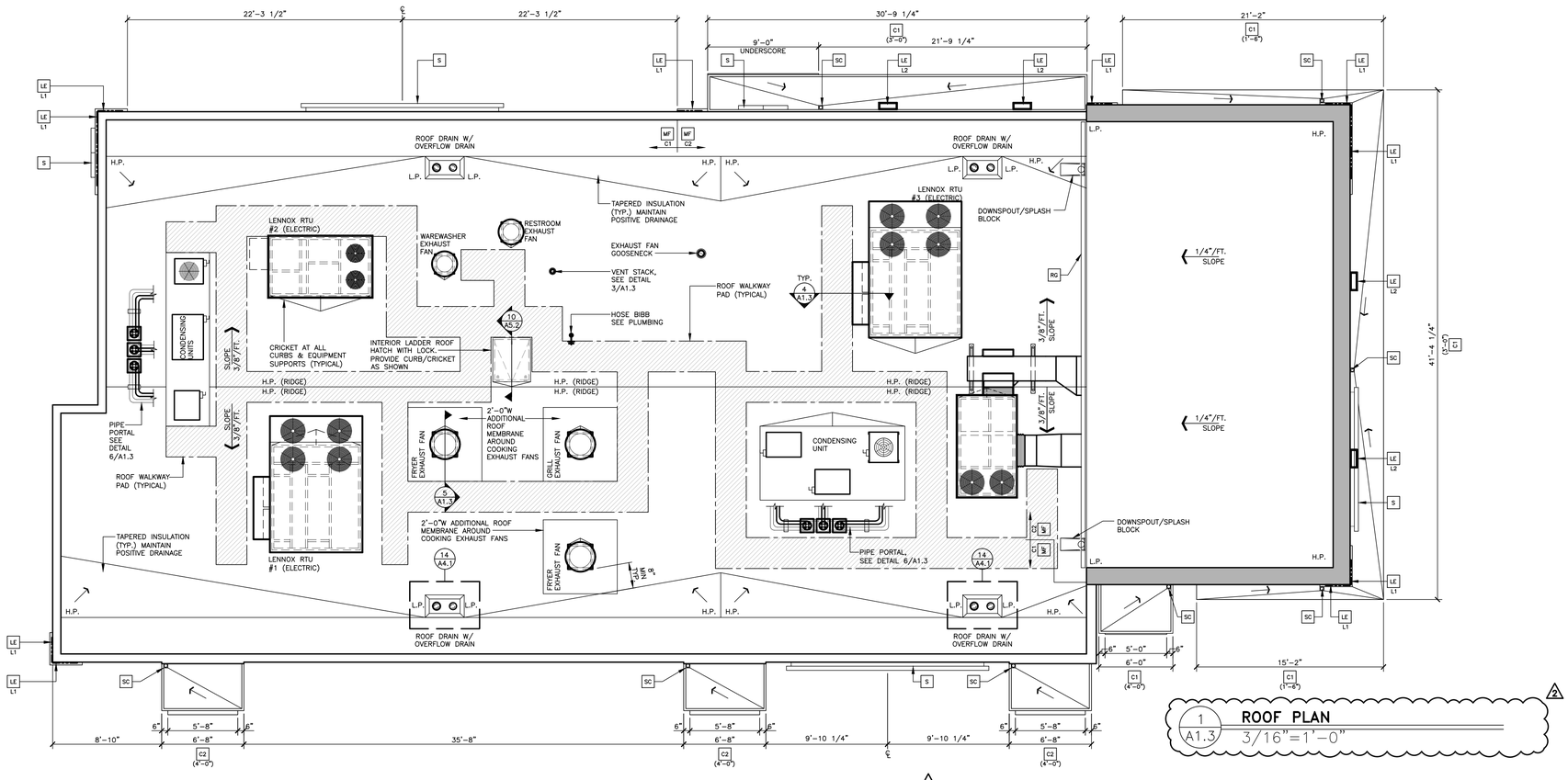

1 A1.3 **ROOF PLAN**
3/16"=1'-0"

LEGEND

L.P.	LOW POINT
H.P.	HIGH POINT
←	DIRECTION OF DRAINAGE
AP	TRELLIS SYSTEM WITH ALUMINUM INFILL PANELS. SLOPE TO EDGE @1/4"PER FT.

KEY NOTES

- C1 ALUMINUM CANOPY SYSTEM (COLOR: SEE ELEVATIONS)
- C2 ALUMINUM CANOPY SYSTEM (COLOR: SEE ELEVATIONS)
- LE ACCENT LIGHTING – SEE ELEVATIONS & ELECTRICAL
  - L1 — LED LIGHT:
    - L1 = SLIM LED (DOWN ONLY)
    - L2 = UP ONLY FLOOD FIXTURE
- MF METAL FASCIA
  - C1 — COLOR:
    - C1 = SEE ELEVATIONS FOR COLOR
    - C2 = SEE ELEVATIONS FOR COLOR
- S McDONALD'S SIGNAGE BY OTHERS UNDER SEPARATE PERMIT (SEE ELEVATIONS)
- SC INTERGRAL GUTTER SCUPPER
- RG RAIN GUTTER (AT PLAYPLACE ROOF)

ROOFING NOTES

1. SINGLE–PLY ROOFING SYSTEM WITH BASE FLASHING SHEET EXTENDING UP PARAPET AND TERMINATED UNDER COPING HOT WELDED TO SEALING STRIP SECURED TO WOOD BLOCKING
2. INSTALLATION OF ROOFING SHALL BE IN ACCORDANCE WITH MANUFACTURER'S SPECIFICATIONS AND PER DETAIL 2 OF THIS SHEET.
3. PROVIDE PREFABRICATED METAL CURBS. COORDINATE SIZE, LOCATION AND INSTALLATION REQUIREMENTS W/ M, E, P & S SHEETS. PROVIDE SHIMS TO LEVEL CURB AREAS WHERE ROOF DECK IS PITCHED.
4. FOR EXACT LOCATION OF EXHAUST FANS, HVAC UNITS, AND ROOF HATCH. REFER TO STRUCTURAL DRAWINGS.
5. CRICKETS MUST BE INSTALLED AT ALL ROOF CURBS & EQUIPMENT PLATFORMS BY GENERALCONTRACTOR.

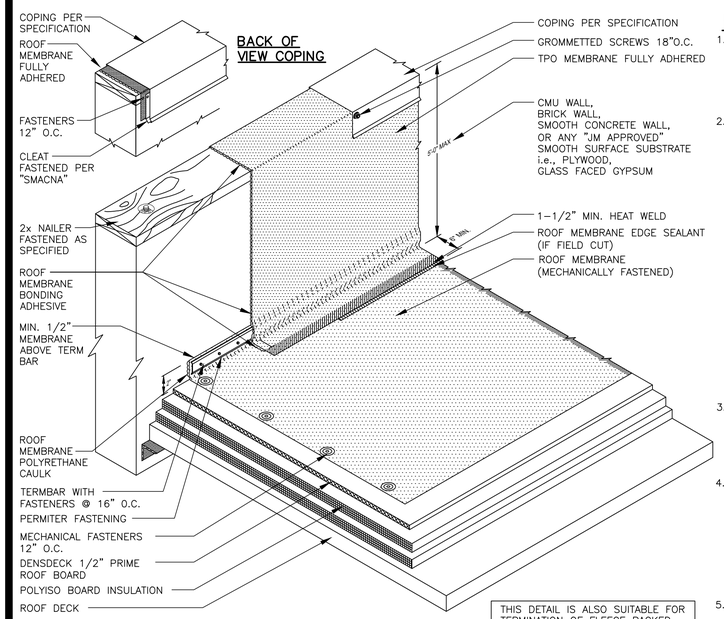

THIS DETAIL IS ALSO SUITABLE FOR TERMINATION OF FLEECE BACKED MEMBRANES. NON FLEECE BACK MEMBRANE IS REQUIRED FOR WALL FLASHINGS.

2 A1.3 **ROOFING SYSTEM**
N.T.S.

ROOFING SYSTEM

1. MANUFACTURERS AND PRODUCTS:
   - A. DURO–LAST PVC ROOFING SYSTEM
   - B. JM–PVC. REFER TO JOHNS MANVILLE WEBSITE (www.jm.com) FOR MOST UP–TO–DATE INFORMATION.

   NO SUBSTITUTIONS ALLOWED
2. SPECIFIED ROOFING SYSTEMS (AS SHOWN):
   HEAT–WELDABLE SINGLE–PLY 50 MIL PVC ROOFING SYSTEM, INSTALLED OVER RIGID INSULATION ON WOOD ROOF DECK HAVING A SLOPE OF 3/8"/FT. MATERIALS SHALL BE AS FOLLOWS:
   - A. SINGLE–PLY ROOFING SYSTEM AS MANUFACTURED BY MANUFACTURER LISTED ABOVE TO COMPLY WITH ASTM E 108 OR UL 790, ASTM D–6878, AND FMG I–90 FOR WIND UPLIFT.
   - B. FASTENERS: METAL FASTENERS AND PLATES AS PER MANUFACTURER
   - C. ACCESSORIES: PRE–FABRICATED CURBS, FLASHING, CORNERS, TERMINATION BARS, PIPE FLASHING, VENT FLASHING ETC. AS PER MANUFACTURER.
   - D. PLEASE SEE SINGLE–PLY FLASHING SPECIFICATIONS FOR A FULL DESCRIPTION OF INSTALLATION INSTRUCTIONS AND REQUIREMENTS WHICH ARE CONSIDERED A PART OF THIS DETAIL.
   - E. ANY CARPENTRY OR METAL WORK SHOULD BE DESIGNED AND CONSTRUCTED IN ACCORDANCE WITH LOCAL CODE REQUIREMENTS AND/OR PROJECT SPECIFICATIONS. THESE COMPONENTS SHOULD BE REVIEWED AND APPROVED BY A LICENSED DESIGN PROFESSIONAL. CONTACT MANUFACTURER FOR METAL OPTIONS TO BE INCLUDED WITHIN THE MANUFACTURER'S GUARANTEE.
   - F. ROOF MEMBRANE EDGE SEALANT IS REQUIRED ON ALL CUT OR NON–ENCAPSULATED EDGES OF REINFORCED MEMBRANE. THIS INCLUDES FACTORY CUT MEMBRANE
3. WALKWAYS:
   - A. 30" WIDE WALKWAY ROLL, HOT AIR WELDED TO MEMBRANE.
   - B. PROVIDE WALKWAY FROM ROOF LADDER EXIT TO ALL ROOF TOP EQUIPMENT AS PER ROOF PLAN ABOVE.
   - C. INSTALL WALKWAY ACCORDING TO WALKWAY PAD MANUFACTURER'S WRITTEN INSTRUCTION.
4. RIGID INSULATION:
   PROVIDE REQUIRED LAYERS OF POLYISOCYANURATE INSULATION W/ 1/2" "DENSDECK" COVER BOARD TO MEET A MINIMUM CONTINUOUS R–30 VALUE – THICKNESS AS REQUIRED. PROVIDE POSITIVE SLOPE TO ALL ROOF DRAINS. SEE ROOF PLAN. PROVIDE TOP LAYER PROTECTION MATERIAL AS PER MANUFACTURERS RECOMMENDATIONS. BOTTOM LAYER OF INSULATION TO HAVE INTEGRAL THERMAL BARRIER OR APPROVED ROOFING MANUFACTURER'S THERMAL UNDERLAYMENT SHEET. ASSEMBLY SHALL COMPLY WITH UL 1256 OR FMG 4450 AND ASTM C 1289, TYPE I OR II.
5. TAPERED INSULATION:
   PROVIDE TAPERED INSULATION AS REQUIRED FOR POSITIVE DRAINAGE TO ROOF DRAINS AS INDICATED PER ROOF PLAN ABOVE. ¼" PER FOOT MIN. REQUIRED.
6. EXHAUST FANS:
   PROVIDE ADDITIONAL LAYER OF ROOF MEMBRANE AROUND EXHAUST FANS AS INDICATED PER ROOF PLAN ABOVE.

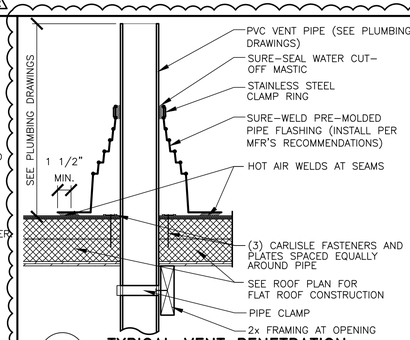

3 A1.3 **TYPICAL VENT PENETRATION**
1 1/2"=1'-0"

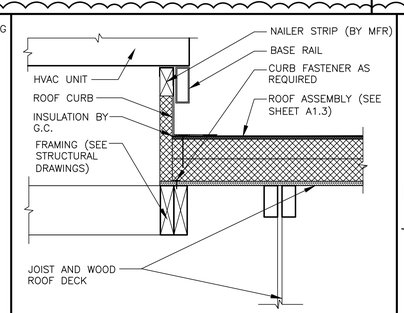

4 A1.3 **HVAC UNIT ROOF CURB DETAIL**
1 1/2"=1'-0"

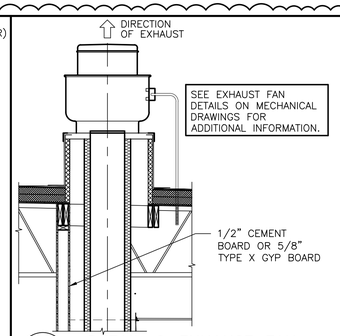

5 A1.3 **DETAIL @ EXHAUST FAN**
1/2"=1'-0"

NOTE:
THIS DETAIL ILLUSTRATES THE METHOD TO ELIMINATING PITCH POCKETS AND THE METHOD OF GROUPING PIPING THAT MUST PENETRATE THE ROOF.

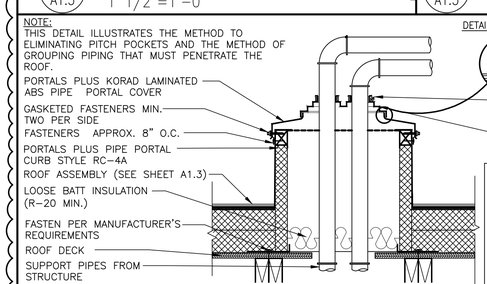

PORTALS PLUS IS A SUPPLIER OF PREFABRICATED ROOF ACCESSORIES AND DOES NOT ASSUME RESPONSIBILITY FOR ERRORS IN DESIGN, ENGINEERING OR INSTALLATION. THE ROOFING SYSTEM MANUFACTURER'S INSTALLATION REQUIREMENTS MAY SUPERSEDE THESE DETAILS FOR WARRANTED ROOF SYSTEMS. SEE MECHANICAL DRAWINGS FOR ADDITIONAL INFORMATION

6 A1.3 **PIPE PORTAL DETAIL**
1 1/2"=1'-0"

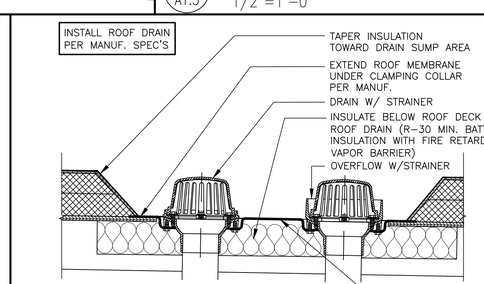

7 A1.3 **SECTION @ ROOF DRAIN**
1 1/2"=1'-0"

REV	DATE	DESCRIPTION	BY
1	04/08/2025	COUNTY COMMENTS, M-O OC COMMENTS, & UTILITY COORDINATION	
2	05/09/2025	PLAYPLACE ADDITION	

REGISTERED ARCHITECT JEREMY WILLIAMS 21926 STATE OF TEXAS

PREPARED BY:
JAW Architects, Inc.
Jeremy Williams, Architect
Phone: 817/702-3357
Email: jeremy@jaw-arch.com

PREPARED FOR:
McDonald's USA, LLC

© 2025 McDonald's USA, LLC
These drawings and specifications are the confidential and proprietary property of McDonald's USA, LLC and shall not be copied or reproduced without written authorization. The contract documents were prepared for use on the specific site in conjunction with that issue date and are not to be used for any other project. Modifications to these drawings for reference or example on another project required the services of Professional Architect and Engineer of Record. Reproductions of the contract documents by other parties is not authorized.

DRAWN BY: JAW
STD ISSUE DATE: 2024
REVIEWED BY: JAW
DATE ISSUED: 10/11/2024

TITLE: 2024 STANDARD BUILDING – BB20
4584–WOOD/WOOD
DESCRIPTION: WOOD BEARING WALLS WITH HARDIE SIDING
WOOD ROOF TRUSS FRAMING
EIFS/BATTEN/METAL/HARDIE SIDING EXTERIOR FINISHES
SITE ID: 042–3591
SITE ADDRESS: NWC OF FM 460 & FM 740, FORNEY TEXAS

JAWA 24–0151
SHEET NO. A1.3
ROOF PLAN

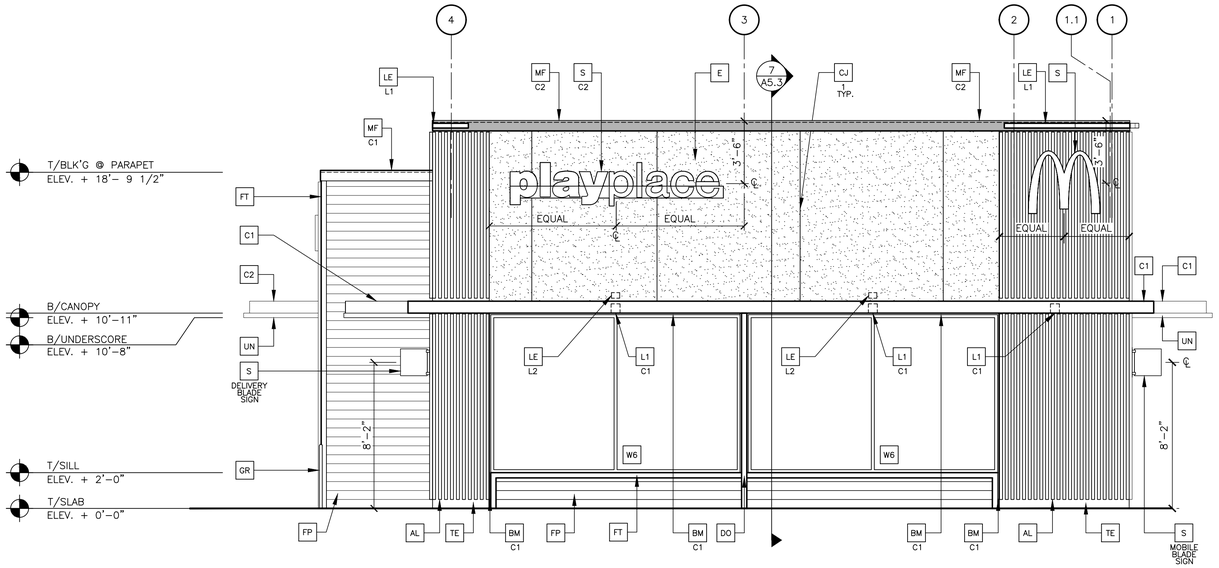

3 A2.0 **FRONT ELEVATION**
1/4" = 1'–0"

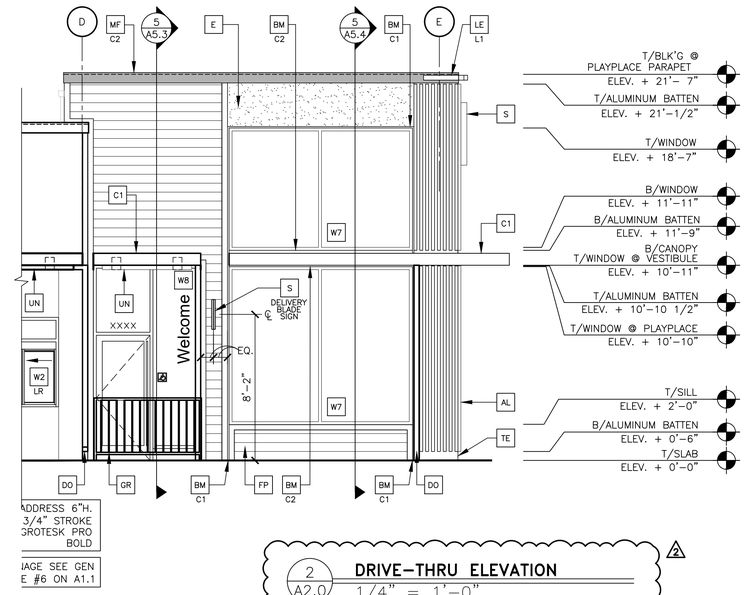

2 A2.0 **DRIVE–THRU ELEVATION**
1/4" = 1'–0"

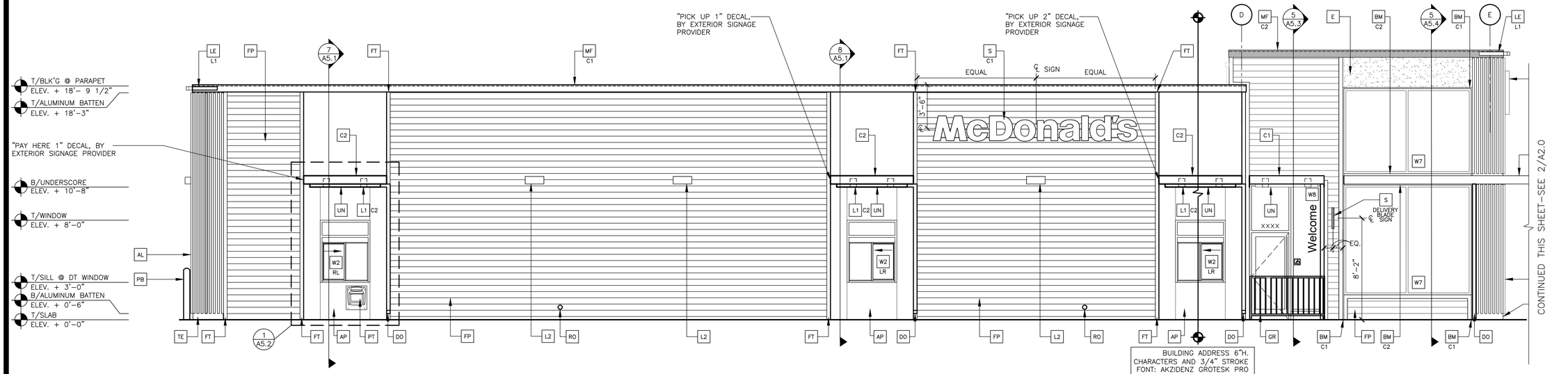

3 A2.0 **DRIVE–THRU ELEVATION**
1/4" = 1'–0"

KEY NOTES:

- AL — ALUMINUM BATTEN SYSTEM
  SIZE: 2"x2" PROFILE
  COLOR: WOOD GRAIN, BACKRAIL UNFINISHED, ENDCAP PAINTED TO MATCH SUBSTRATE: 1/2" EXTERIOR HIGH DENSITY OVERLAY (HDO) PLYWOOD, BB, GROUP 1, HDO BOTH FACES, APA TRADEMARKED.
  COURSE GRIT SAND SURFACES PRIOR TO PRIMING. PRIME AND PAINT BOTH SIDES AND ALL EDGES PRIOR TO INSTALLATION.
  SUBSTRATE COLOR: "IRON ORE" SW 7069 BY SHERWIN WILLIAMS
- AP — ALPOLIC METAL PANEL (COLOR: DON GRAY)
- BM — BRAKE METAL TRIM
  C1— COLOR:
  C1= GOLD
  C2= RAL 7022
- C1 — ALUMINUM CANOPY SYSTEM
  COLOR: WHITE
- C2 — ALUMINUM CANOPY SYSTEM
  COLOR: RAL 7022
- CJ — CONTROL JOINT
  1— TYPE: 1 = EIFS
- D — HOLLOW METAL DOOR
  PAINT: "GAUNTLET GREY" SW7019 BY SHERWIN WILLIAMS
- DE — DECAL BY GRAPHICS SUPPLIER
  SURFACE APPLIED, FIELD INSTALLED, PRE CUT, PRE SPACED.
  SUPPLIERS:
  VOMELA (865) 330–7337, ann.bowen@vomela.com
  GFX INTERNATIONAL (847) 543–4600, mcdonaldsdecor@gfxi.com
- DO — DOWNSPOUT
  3" DOWNSPOUT BY CANOPY SYSTEM MANUFACTURER
  COLOR: RAL 7022
  COORDINATE WITH CIVIL TO TIE INTO STORM DRAINAGE
- E — EXTERIOR INSULATION FINISH SYSTEM (E.I.F.S.)
  COLOR: "IRON ORE" SW 7069 BY SHERWIN WILLIAMS
- EJ — EXPANSION JOINT, SEE DETAIL 7/A4.1
- FB — FILL BOX
  C02— C02 = BULK C02 FILL BOX (EQPM SCHEDULE ITEM 49.00)
  BO = BULK OIL FILL BOX (EQPM SCHEDULE ITEM 700.18)
- FP — FIBER CEMENT LAP SIDING: SMOOTH HARDI–BOARD PLANK BY JAMES HARDIE, 8–1/4" WIDTH, 7" EXPOSURE, HZ5
  PAINT: "GAUNTLET GREY" SW7019 BY SHERWIN WILLIAMS
- FT — FIBER CEMENT TRIM: HARDIE TRIM BOARDS 4/4 SMOOTH, 3 1/2" WIDTH, 3/4" THICK, HZ5
  PAINT: "GAUNTLET GREY" SW7019 BY SHERWIN WILLIAMS
- GR — GUARD RAIL –SEE SITE PLAN FOR EXACT LOCATION AND LENGTH
  PAINT: "IRON ORE" SW 7069 BY SHERWIN WILLIAMS
- L1 — RECESSED DOWN LIGHT FIXTURE – SEE ELECTRICAL
  C1—COLOR:
  C1= WHITE
  C2= GOLD
- L2 — RADIAL SCONCE LIGHT FIXTURE – SEE ELECTRICAL
  COLOR: PLATINUM SILVER
- LE — ACCENT LIGHTING – SEE ELECTRICAL
  L1—LED LIGHT:
  L1 = SLIM LED (DOWN ONLY)
  L2 = UP ONLY FLOOD FIXTURE
- MF — PRE–FAB ANCHOR–TITE METAL FASCIA
  C1— COLOR:
  C1= WEATHERED ZINC
  C2= RAL 7022
- PB — PIPE BOLLARD – PAINTED YELLOW
- PT — (RMHC) COIN COLLECTOR
  MODEL: #WPT STD
  CALL 1–888–743–7435 TO ORDER
- RO — ROOF DRAIN OVERFLOW PIPE PAINT TO MATCH SURROUNDING MATERIAL
- RG — RAIN GUTTER (AT PLAYPLACE)
- S — McDONALD'S SIGNAGE BY OTHERS – UNDER SEPARATE PERMIT.
  C1— COLOR:
  C1= WEATHERED ZINC RACEWAY
  C2= RAL 7022 RACEWAY
- ST — CO2 STROBE/ALARM. SEE MECHANICAL DRAWINGS FOR SPECIFICATION.
- TE — TRU EXTERIOR 1"X6" TRIM, PAINTED ON SITE
  COLOR: "IRON ORE" SW 7069 BY SHERWIN WILLIAMS
- UN — METAL UNDERSCORE
  COLOR: GOLD
- W# — EXTERIOR WINDOW ASSEMBLY – TEMPERED GLASS
  COLOR: DARK BRONZE (SEE SHEET A6.0)
- W2 — DRIVE–THRU WINDOW BY READY ACCESS
  MODEL: 600 SERIES, 36" SERVICE HEIGHT WITH TRANSOM, MANUAL OPEN; ELECTRONIC RELEASE
  XX— COLOR: DEEP BRONZE
  SLIDE DIRECTION: RL = RIGHT TO LEFT
  LR = LEFT TO RIGHT

REV	DATE	DESCRIPTION	BY
1	04/08/2025	COUNTY COMMENTS, M-O OC COMMENTS, & UTILITY COORDINATION	
2	05/09/2025	PLAYPLACE ADDITION	

REGISTERED ARCHITECT JEREMY WILLIAMS 21926 STATE OF TEXAS

PREPARED BY:
JAW Architects, Inc.
Jeremy Williams, Architect
Phone: 817/926-3387
Email: jeremy@jaw-arch.com

© 2025 McDonald's USA, LLC

PREPARED FOR:
McDonald's USA, LLC

These drawings and specifications are the confidential and proprietary property of McDonald's USA, LLC and shall not be copied or reproduced without written authorization. The contract documents were prepared for use on this specific site in conjunction with its issue date and are available for review by interested parties with a bona fide need. These drawings for reference or example on another project requires the services of Professional Architect and Engineer. Reproductions of the contract documents for reuse on another project is not authorized.

DRAWN BY: —
STD ISSUE DATE: 2024
REVIEWED BY: JAW
DATE ISSUED: 10/11/2024

TITLE: 2024 STANDARD BUILDING – BB20
4584–WOOD/WOOD

DESCRIPTION:
WOOD BEARING WALLS WITH HARDIE SIDING
WOOD ROOF TRUSS FRAMING
EIFS/BATTEN/METAL/HARDIE SIDING EXTERIOR FINISHES

SITE ID: 042–3591
SITE ADDRESS: NWC OF FM 460 & FM 740, FORNEY TEXAS

SHEET NO. JAWA 24–0151
A2.0
ELEVATIONS

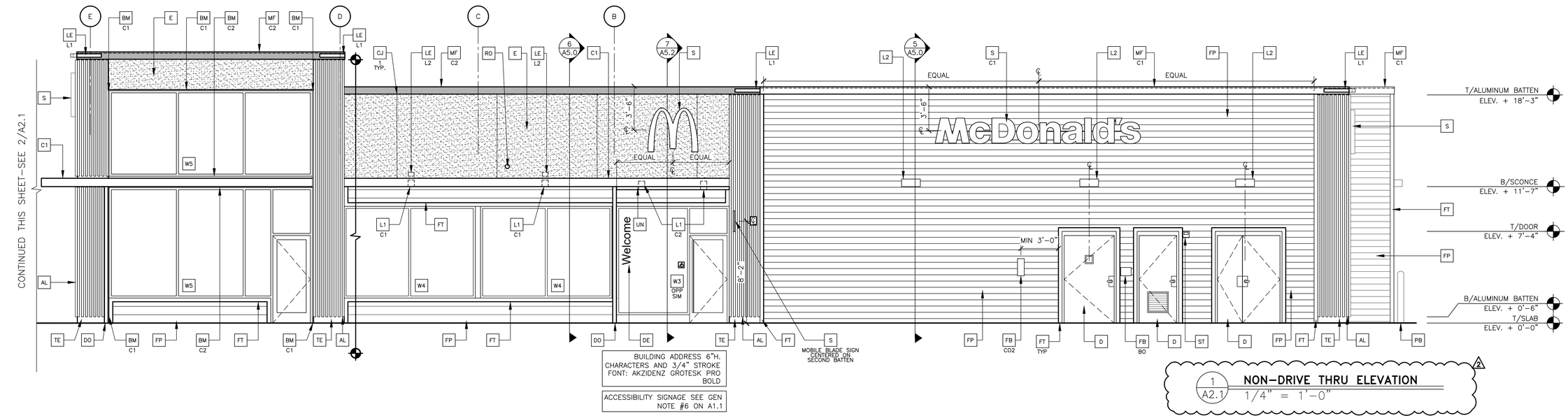

1 A2.1 NON–DRIVE THRU ELEVATION
1/4" = 1'–0"

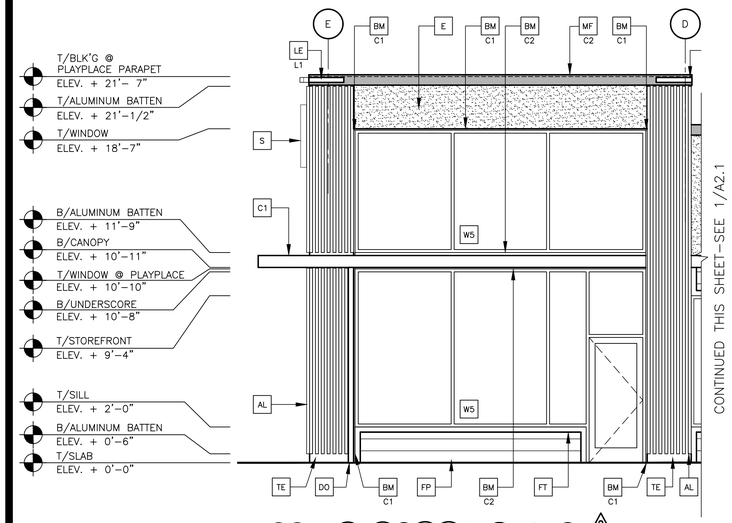

2 A2.1 DRIVE THRU ELEVATION
1/4" = 1'–0"

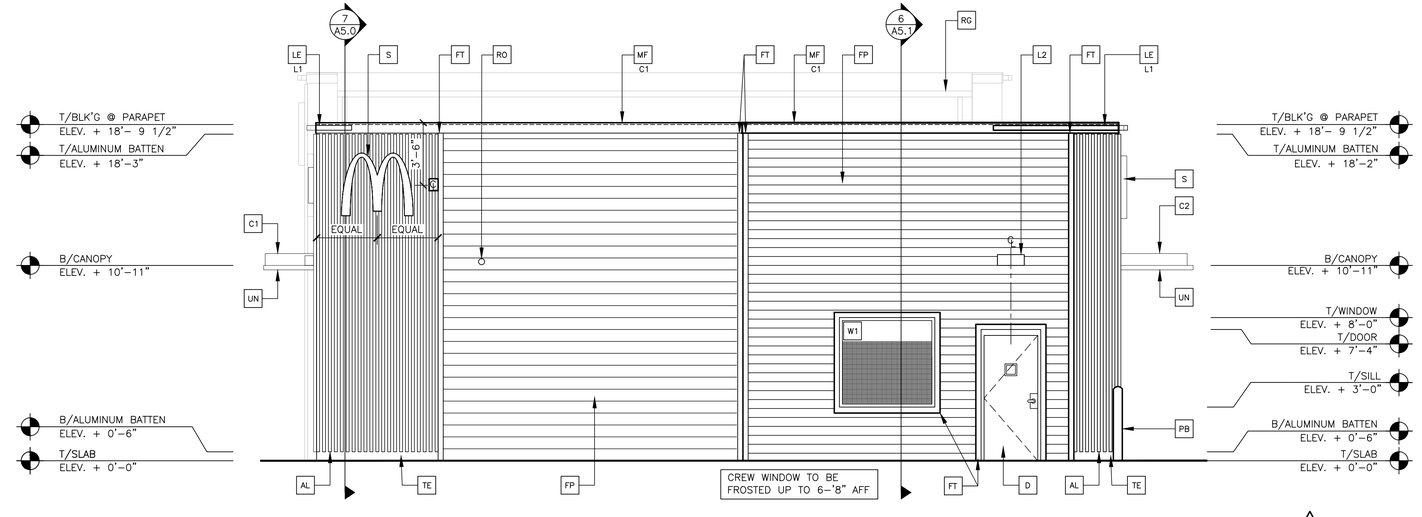

3 A2.1 REAR ELEVATION
1/4" = 1'–0"

KEY NOTES:

- AL — ALUMINUM BATTEN SYSTEM
  SIZE: 2"x2" PROFILE
  COLOR: WOOD GRAIN, BACKRAIL UNFINISHED, ENDCAP PAINTED TO MATCH
  SUBSTRATE: 1/2" EXTERIOR HIGH DENSITY OVERLAY (HDO) PLYWOOD, BB, GROUP 1, HDO BOTH FACES, APA TRADEMARKED.
  COURSE GRIT SAND SURFACES PRIOR TO PRIMING. PRIME AND PAINT BOTH SIDES AND ALL EDGES PRIOR TO INSTALLATION.
  SUBSTRATE COLOR: "IRON ORE" SW 7069 BY SHERWIN WILLIAMS
- AP — ALPOLIC METAL PANEL (COLOR: DON GRAY)
- BM — BRAKE METAL TRIM (2)
  C1— COLOR:
  C1= GOLD
  C2= RAL 7022
- C1 — ALUMINUM CANOPY SYSTEM
  COLOR: WHITE
- C2 — ALUMINUM CANOPY SYSTEM
  COLOR: RAL 7022
- CJ — CONTROL JOINT
  1 — TYPE: 1 = EIFS
- D — HOLLOW METAL DOOR
  PAINT: "GAUNTLET GREY" SW7019 BY SHERWIN WILLIAMS
- DE — DECAL BY GRAPHICS SUPPLIER
  SURFACE APPLIED, FIELD INSTALLED, PRE CUT, PRE SPACED.
  SUPPLIERS:
  VOMELA (865) 330–7337, ann.bowen@vomela.com
  GFX INTERNATIONAL (847) 543–4600, mcdonaldsdecor@gfxi.com
- DO — DOWNSPOUT
  3" DOWNSPOUT BY CANOPY SYSTEM MANUFACTURER
  COLOR: RAL 7022
  COORDINATE WITH CIVIL TO TIE INTO STORM DRAINAGE
- E — EXTERIOR INSULATION FINISH SYSTEM (E.I.F.S.)
  COLOR: "IRON ORE" SW 7069 BY SHERWIN WILLIAMS
- EJ — EXPANSION JOINT, SEE DETAIL 7/A4.1
- FB — FILL BOX
  CO2— CO2 = BULK CO2 FILL BOX (EQPM SCHEDULE ITEM 49.00)
  BO = BULK OIL FILL BOX (EQPM SCHEDULE ITEM 700.18)
- FP — FIBER CEMENT LAP SIDING: SMOOTH HARDI–BOARD PLANK BY JAMES HARDIE, 8–1/4" WIDTH, 7" EXPOSURE, HZ5
  PAINT: "GAUNTLET GREY" SW7019 BY SHERWIN WILLIAMS
- FT — FIBER CEMENT TRIM: HARDIE TRIM BOARDS 4/4 SMOOTH, 3 1/2" WIDTH, 3/4" THICK, HZ5
  PAINT: "GAUNTLET GREY" SW7019 BY SHERWIN WILLIAMS
- GR — GUARD RAIL –SEE SITE PLAN FOR EXACT LOCATION AND LENGTH
  PAINT: "IRON ORE" SW 7069 BY SHERWIN WILLIAMS
- L1 — RECESSED DOWN LIGHT FIXTURE – SEE ELECTRICAL
  C1— COLOR:
  C1= WHITE
  C2= GOLD
- L2 — RADIAL SCONCE LIGHT FIXTURE – SEE ELECTRICAL
  COLOR: PLATINUM SILVER
- LE — ACCENT LIGHTING – SEE ELECTRICAL
  L1—LED LIGHT:
  L1 = SLIM LED (DOWN ONLY)
  L2 = UP ONLY FLOOD FIXTURE
- MF — PRE–FAB ANCHOR–TITE METAL FASCIA
  C1— COLOR:
  C1= WEATHERED ZINC
  C2= RAL 7022
- PB — PIPE BOLLARD – PAINTED YELLOW
- PT — (RMHC) COIN COLLECTOR
  MODEL: #WPT STD
  CALL 1–888–743–7435 TO ORDER
- RO — ROOF DRAIN OVERFLOW PIPE PAINT TO MATCH SURROUNDING MATERIAL
- RG — RAIN GUTTER (AT PLAYPLACE) (2)
- S — McDONALD'S SIGNAGE BY OTHERS – UNDER SEPARATE PERMIT.
  C1— COLOR:
  C1= WEATHERED ZINC RACEWAY
  C2= RAL 7022 RACEWAY
- ST — CO2 STROBE/ALARM. SEE MECHANICAL DRAWINGS FOR SPECIFICATION.
- TE — TRU EXTERIOR 1"X6" TRIM, PAINTED ON SITE
  COLOR: "IRON ORE" SW 7069 BY SHERWIN WILLIAMS
- UN — METAL UNDERSCORE
  COLOR: GOLD
- W# — EXTERIOR WINDOW ASSEMBLY – TEMPERED GLASS
  COLOR: DARK BRONZE (SEE SHEET A6.0)
- W2 — DRIVE–THRU WINDOW BY READY ACCESS
  XX— MODEL: 600 SERIES, 36" SERVICE HEIGHT WITH TRANSOM, MANUAL OPEN; ELECTRONIC RELEASE
  COLOR: DEEP BRONZE
  SLIDE DIRECTION: RL = RIGHT TO LEFT
  LR = LEFT TO RIGHT

REV	DATE	DESCRIPTION	BY
1	04/08/2025	COUNTY COMMENTS, M-O OC COMMENTS, & UTILITY COORDINATION	
2	05/09/2025	PLATPLACE ADDITION	

PREPARED BY:
JAW ARCHITECTS
JAW Architects, Inc.
Jeremy Williams, Architect
Phone: 817/928-3387
Email: jeremy@jaw-arch.com

PREPARED FOR:
McDonald's USA, LLC

© 2025 McDonald's USA, LLC
These drawings and specifications are the confidential and proprietary property of McDonald's USA, LLC and shall not be copied or reproduced without written authorization. The contract documents were prepared for use on this specific site in conjunction with its issue date and are not suitable for use at other locations or at a later date. Reuse of these drawings for reference or example on another project requires the services of properly licensed architects and engineers. Representations of the contract documents for reuse on another project is not authorized.

DRAWN BY: --
STD ISSUE DATE 2024
REVIEWED BY JAW
DATE ISSUED 10/11/2024

TITLE: 2024 STANDARD BUILDING – BB20
4584–WOOD/WOOD

DESCRIPTION: WOOD BEARING WALLS WITH HARDIE SIDING
WOOD ROOF TRUSS FRAMING
EIFS/BATTEN/METAL/HARDIE SIDING EXTERIOR FINISHES

SITE ID: 042–3591
SITE ADDRESS: NWC OF FM 460 & FM 740, FORNEY TEXAS

SHEET NO. JAWA 24–0151
A2.1
ELEVATIONS

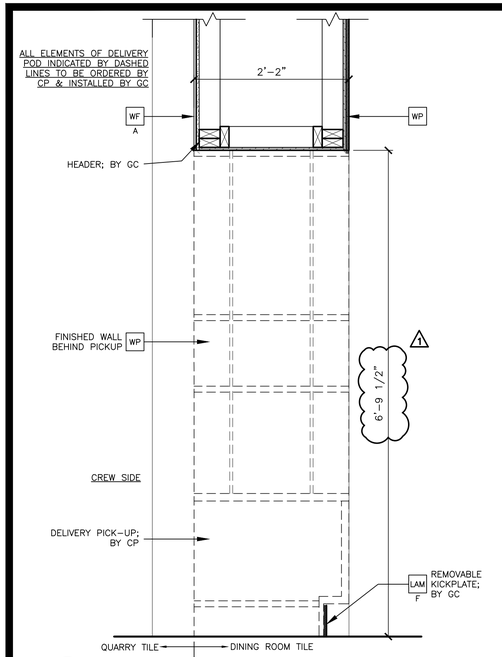

15 A3.1 **SECTION @ DELIVERY POD**
1" = 1'-0"

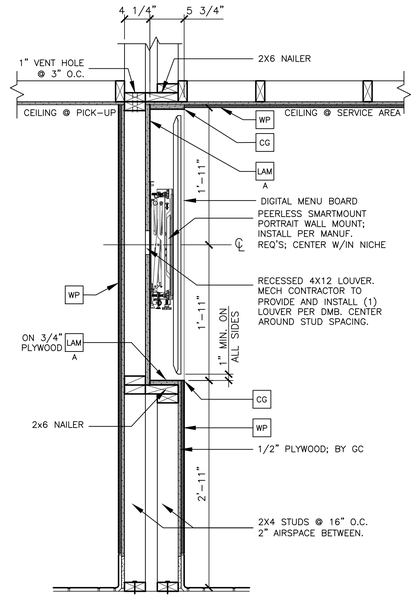

14 A3.1 **SECTION @ DIGITAL MERCHANDISER**
1"=1'-0"

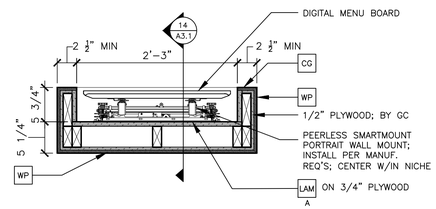

13 A3.1 **PLAN DETAIL @ DIGITAL MERCH.**
1"=1'-0"

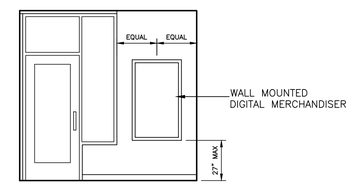

11 A3.1 **NONDRIVE-THRU VESTIBULE ELEVATION**
1/4" = 1'-0"

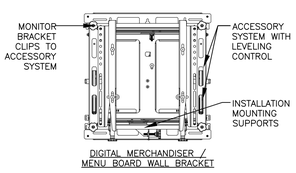

* SECURE TO STUDS OR 3/4" PLYWOOD BACKING
* FOLLOW MANUFACTURER'S INSTALLATION INSTRUCTIONS

10 A3.1 **DIGITAL BOARD BRACKET DETAIL**
1"=1'-0"

OPTIONAL LATE NIGHT WINDOW, FOR HIGH DELIVERY RESTAURANTS

W1 STOREFRONT WINDOW ASSEMBLY – TEMPERED GLASS COLOR: DARK BRONZE

W2 LATE NIGHT WINDOW COLOR: DARK BRONZE

PICK-UP WINDOW SPECIFICATION
MODEL: READY ACCESS 275 SERIES
FRAME SIZE – 47.5"W x 35.75"H x 4"D
SERVICE OPENING – 19"W x 27"H
MANUAL OPEN/SELF CLOSE

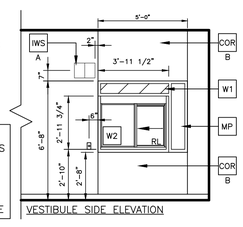

9 A3.1 **LATE NIGHT WINDOW – VESTIBULE SIDE**
1/4" = 1'-0"

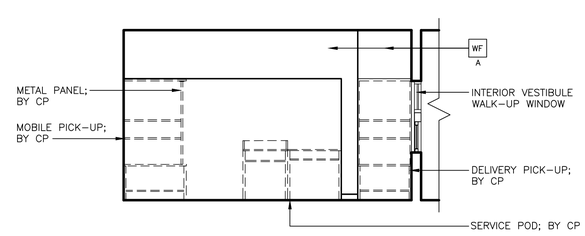

8 A3.1 **SERVICE AREA ELEVATION – CREW SIDE**
1/4" = 1'-0"

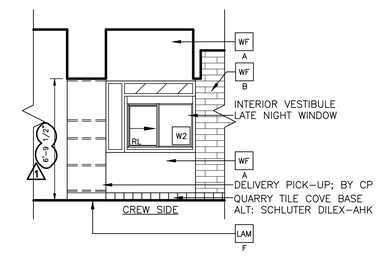

6 A3.1 **LATE NIGHT WINDOW – CREW SIDE**
1/4" = 1'-0"

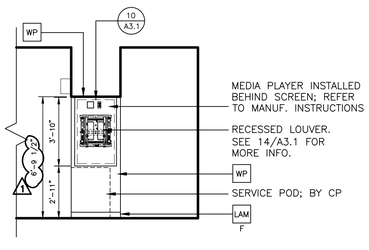

5 A3.1 **SERVICE AREA ELEVATION**
1/4" = 1'-0"

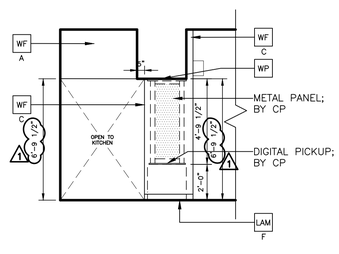

4 A3.1 **SERVICE AREA ELEVATION**
1/4" = 1'-0"

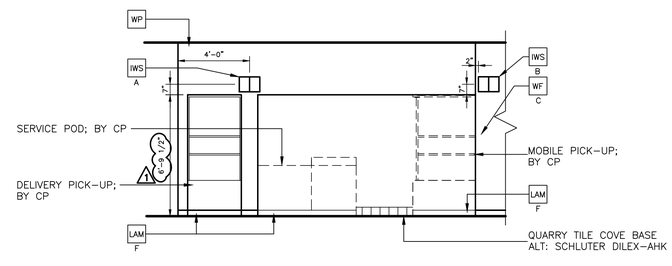

3 A3.1 **SERVICE AREA ELEVATION – CUSTOMER SIDE**
1/4" = 1'-0"

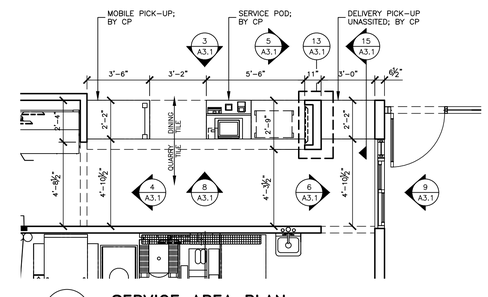

1 A3.1 **SERVICE AREA PLAN**
1/4" = 1'-0"

KEY NOTES

CG CORNER GUARD: 3/4" ANGLE BY DECOR
COLOR: BLACK

COR CORIAN:
X–
A = 1/2" CORIAN CAMEO WHITE
B = 1/2" CORIAN DEEP TITANIUM

IWS INTERIOR WAYFINDING SIGNAGE
X–
A = McDELIVERY INTERIOR TRIANGULAR SIGN
B = MOBILE ORDER INTERIOR TRIANGULAR SIGN
C = ADA ASSISTANCE SIGNAGE

LAM LAMINATE:
X–
COLOR:
A = IDMB / DIG. MERCH., SMOOTH BLACK PLASTIC LAMINATE BY GC
E = McDELIVERY UNDERSCORE, LAMITECH GOLDEN
F = BASE BOARD, FORMICA COMPACT LAMINATE MATTE BLACK BY GC

MP METAL INFILL PANEL. MATCH DARK BRONZE WINDOW ASSEMBLY

WP LAMINATE WALL PANEL
PER DECOR PORTFOLIO:
GEOMETRY = LAMITECH – 1557–PR, COLOR: SEASON ASH
LUNA = LAMITECH – 1467 MT, COLOR: LINEAL OAK
RAY = WILSONART – 7954–38A, COLOR: NATURAL RIFT
ROUTE 66 = LAMITECH – 1540 PW, COLOR: ONTARIO OAK
COORDINATE WITH McDONALD'S AREA CONSTRUCTION MANAGER

WF WALL FINISH.
TILE GROUT: MAPEI 02 PEWTER – JOINT TO BE 1/16" MAX. (UNO)
X–
A = TILE PER DECOR PORTFOLIO 1
GEOMETRY/LUNA/RAY: ITALIA – 754–747. COLOR: NOIR.
1 SIZE: 4"X12". PATTERN: STACKED BOND.
ROUTE 66: ITALIA – WHITE GLOSSY CHEVRON
GROUT: CHARCOAL 47 – JOINT TO BE 1/16" MAX.
B = CROSSVILLE – COLOR BY NUMBERS. COLOR: AFTERNOON SPRAY.
SIZE: 4"X12". PATTERN: STACKED BOND.
C = WALL PANEL / TILE PER DECOR PORTFOLIO.
GEOMETRY: CROSSVILLE – KALEIDOSCOPE, 24"X24", STACKED BOND.
LUNA: CROSSVILLE – MOONLIGHT GREY, 12"X24", STACKED BOND.
RAY: LAMITECH – INDUSTRIAL CONCRETE (WITHOUT HOLES)
ROUTE 66: ITALIA – WHITE GLOSSY CHEVRON
1 GROUT: CHARCOAL 47 – JOINT TO BE 1/16" MAX.

GENERAL NOTES

- ALL WALL LAMINATE PANELING MANUFACTURED BY DECOR PURCHASE AND INSTALL BY GC, UNO.
- ALL ELEMENTS 'BY CP' TO BE ORDERED BY CENTRAL PURCHASING AND INSTALLED BY GC, UNO.
- KIOSK SIGNAGE BY GC; ORDER FROM AMANDA GUSTAFSON W/ ALTRUA (agustafson@altrua.com) 'CREDIT ONLY' & 'CASH/CREDIT' KIOSK SIGNAGE

REV	DATE	DESCRIPTION	BY
1	04/08/2025	COUNTY COMMENTS, M/O QC COMMENTS, & UTILITY COORDINATION	

REGISTERED ARCHITECT JEREMY WILLIAMS 8792 STATE OF TEXAS

PREPARED BY:
JAW
JAW Architects, Inc.
Jeremy Williams, Architect
Phone: 817-703-3387
Email: jeremy@jaw-arch.com

© 2025 McDonald's USA, LLC

PREPARED FOR:
McDonald's USA, LLC

These drawings and specifications are the confidential and proprietary property of McDonald's USA, LLC, and are not to be reproduced or used without written authorization. The contract documents were prepared for use on this specific site in connection with its issue date and are not suitable for use on any other project. Modification of these drawings for reference or example on another project requires the services of properly licensed architects and engineers. Reproduction of this notice is sufficient for reuse on another project if not authorized.

DRAWN BY: JAW
STD ISSUE DATE: 2024
REVIEWED BY: JAW
DATE ISSUED: 10/11/2024

TITLE: 2024 STANDARD BUILDING – BB20
4584–WOOD/WOOD

DESCRIPTION	SITE ID
WOOD BEARING WALLS WITH HARDIE SIDING	
WOOD ROOF TRUSS FRAMING	
EIFS/BATTEN/METAL/HARDIE SIDING EXTERIOR FINISHES	042–3591

SITE ADDRESS: NWC OF FM 460 & FM 740, FORNEY TEXAS

SHEET NO. JAWA 24–0151
A3.1
SERVICE AREA DETAILS

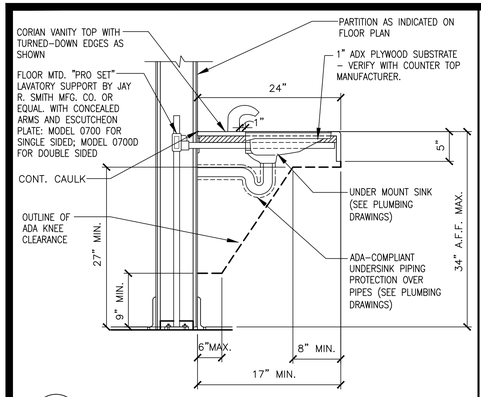

6 / A4.0 **SECTION @ LAVATORY**
1"=1'-0"

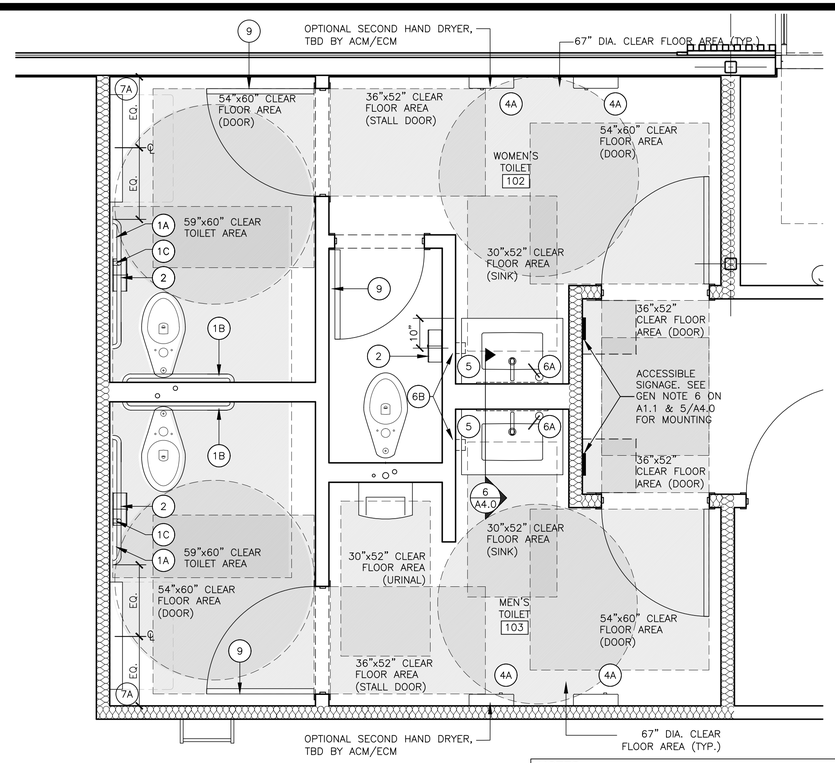

1 / A4.0 **ENLARGED RESTROOM PLAN – NOTED**
1/2" = 1'-0"

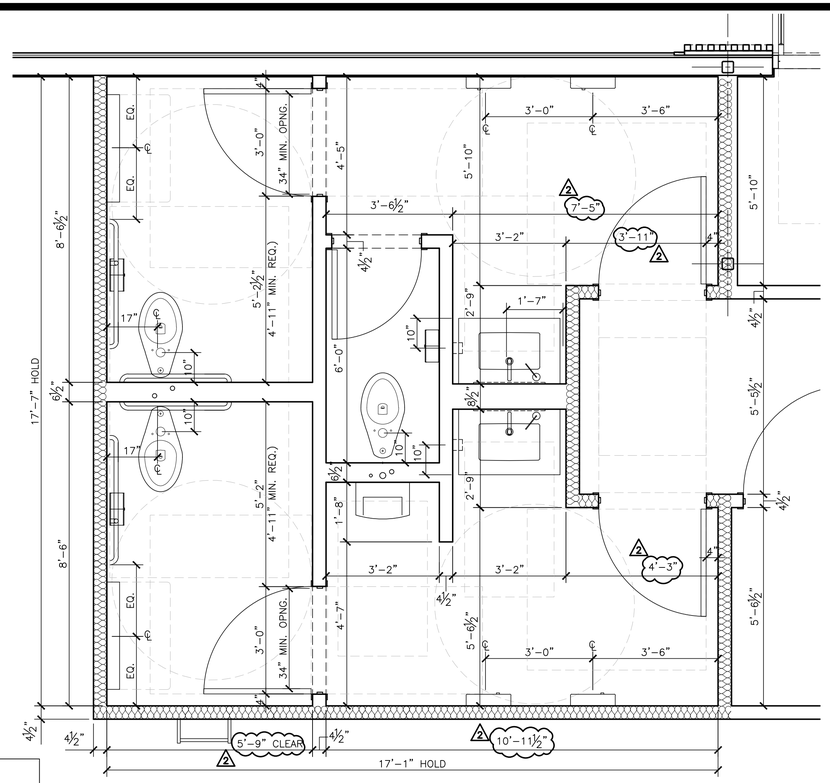

2 / A4.0 **ENLARGED RESTROOM PLAN – DIMENSIONED**
1/2" = 1'-0"

NOTES

1. ALL DIMENSIONS SHOWN ARE TAKEN TO CEMENT BD.
2. SEE SHEET A1.1 FOR PARTITION TYPES
3. SEE SHEETS A6.0 & A6.1 FOR DOOR AND FINISH SCHEDULES.
4. SEE 4/A4.0 FOR FIXTURE MOUNTING HEIGHTS

(X) = RESTROOM ACCESSORY – SEE 3/A4.0

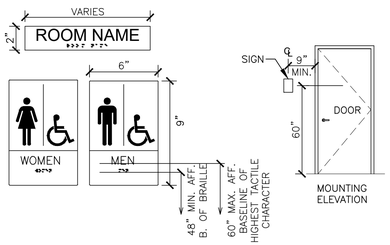

GRAPHICS SHOWN ARE FOR REFERENCE ONLY.

GC TO PROVIDE ADA SIGNAGE PACKAGE AND INSTALL SIGNS AT LOCATIONS AND POSITIONS INDICATED IN PACKAGE OR AS REQUIRED BY LOCAL CODES. SIGNAGE PACKAGE SUPPLIED BY:

FRANKE/S2K
1-800-423-5247
www.frankesupply.com
email: fs-frankesupply.us@franke.com

SIGNAGE NOTES:

1. EACH EXIT DOOR SHALL HAVE A TACTILE SIGN, INCLUDING RAISED LETTERS AND BRAILLE, STATING "EXIT" AND SHALL COMPLY WITH CHAPTER 7. ALL SIGNAGE SHALL CONFORM WITH ACCESSIBILITY GUIDELINES AND LOCAL GUIDELINES INCLUDING BUT NOT LIMITED TO PROPORTION, COLOR CONTRAST AND RELIEF AND GRADE 2 BRAILLE REQUIREMENTS.
2. WHEN PERMANENT IDENTIFICATION IS PROVIDED FOR ROOMS AND SPACES, RAISED LETTERS SHALL BE PROVIDED AND SHALL BE ACCOMPANIED BY BRAILLE IN CONFORMANCE WITH CHAPTER 7. SIGNS SHALL BE INSTALLED ON THE WALL ADJACENT TO THE LATCH SIDE OF THE DOOR. WHERE THERE IS NO WALL SPACE ON THE LATCH SIDE, INCLUDING AT DOUBLE LEAF DOORS, SIGNS SHALL BE PLACED ON THE NEAREST ADJACENT WALL, PREFERABLY ON THE RIGHT. MOUNTING HEIGHT SHALL BE 60" ABOVE THE FINISHED FLOOR TO THE CENTERLINE OF THE SIGN. MOUNTING LOCATION SHALL BE DETERMINED SO THAT A PERSON MAY APPROACH WITHIN 3" OF SIGNAGE WITHOUT ENCOUNTERING PROTRUDING OBJECTS OR STANDING WITHIN THE SWING OF A DOOR.

5 / A4.0 **ACCESSIBLE SIGNAGE**
N.T.S.

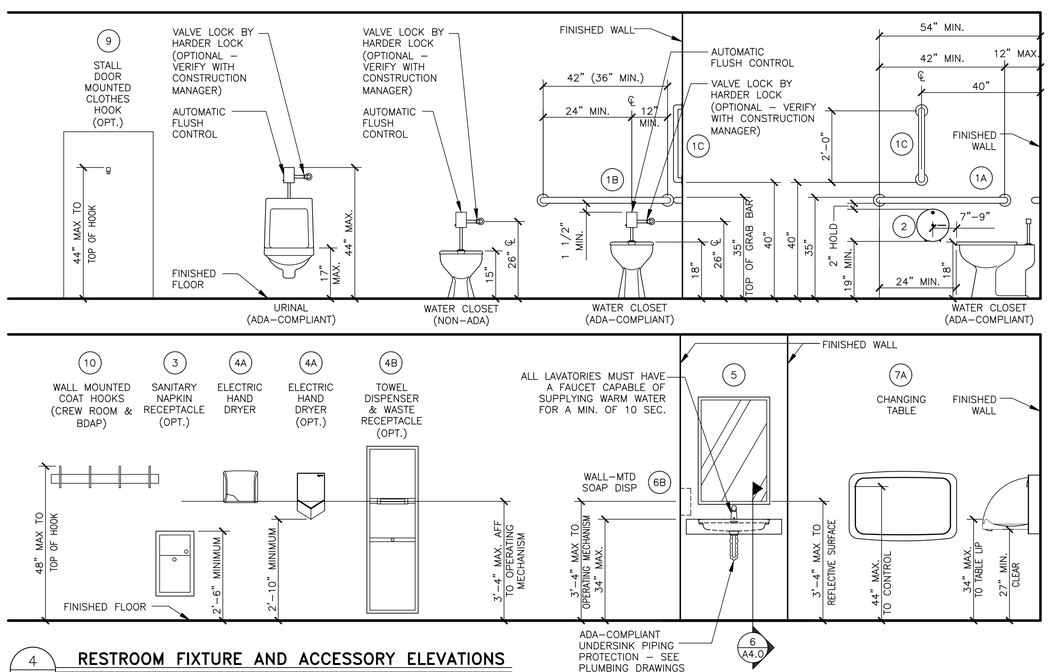

4 / A4.0 **RESTROOM FIXTURE AND ACCESSORY ELEVATIONS**
1/2" = 1'-0"

	ITEM (SEE NOTE 2)	MFR MODEL #	SUPPLIER	BACKUP SUPPORT (SEE NOTE 3)
1A	GRAB BAR 42"	BOBRICK B-6806X42	HUGHES SUPPLY (866) 310-3576 MCDCOORD@HAJOCA.COM	(1)2x6 4'-0" LONG CENTER MOUNTED
1B	GRAB BAR 36"	B-6806X36		
1C	GRAB BAR 24"	B-6806X24		
2	TOILET TISSUE DISPENSER, JUMBO, SURFACE MOUNTED	BRADLEY 5424	HUGHES SUPPLY (866) 310-3576 MCDCOORD@HAJOCA.COM	FRAME WALL OPENING PER MANUFACTURER'S RECOMMENDATIONS
3	SANITARY NAPKIN RECEPTACLE, RECESSED (OPTIONAL)	BOBRICK B-353	HUGHES SUPPLY (866) 310-3576 MCDCOORD@HAJOCA.COM	
4A	HAND DRYER, ENERGY EFFICIENT MODEL, ADA, ALUMINUM BRUSHED	WORLD DRYER Q-973A2 VerdeDri	HUGHES SUPPLY (866) 310-3576 MCDCOORD@HAJOCA.COM	FRAME WALL OPENING PER MANUFACTURER'S RECOMMENDATIONS
4A OPTION	HAND DRYER, ENERGY EFFICIENT MODEL ADA, SPRAYED NICKEL	DYSON AIRBLADE V	HUGHES SUPPLY (866) 310-3576 MCDCOORD@HAJOCA.COM	
4B OPTION	TOWEL DISPENSER & WASTE RECEPTACLE, COMBINATION, RECESSED (OPTIONAL)	BOBRICK B-3974	HUGHES SUPPLY (866) 310-3576 MCDCOORD@HAJOCA.COM	
5	MIRROR, CHANNEL FRAME	BOBRICK B-165 2436	HUGHES SUPPLY (866) 310-3576 MCDCOORD@HAJOCA.COM	
6A	SOAP DISPENSER, COUNTER MOUNTED, 6" SPOUT (OPTIONAL)	BOBRICK B-82216	HUGHES SUPPLY (866) 310-3576 MCDCOORD@HAJOCA.COM	
6B	SOAP DISPENSER, WALL-MOUNTED	BOBRICK B-2112	HUGHES SUPPLY (866) 310-3576 MCDCOORD@HAJOCA.COM	
7	BABY CHANGING TABLE, HORIZONTAL, RECESSED, ADA COMPLIANT, STAINLESS STEEL	KOALA KARE KB310-SSRE	HUGHES SUPPLY (866) 310-3576 MCDCOORD@HAJOCA.COM	INSTALL PER MANUFACTURER'S RECOMMENDATIONS
7 OPTION "A"	BABY CHANGING TABLE, HORIZONTAL, SURFACE MOUNT, ADA COMPLIANT, STAINLESS STEEL	KOALA KARE KB300-SS	HUGHES SUPPLY (866) 310-3576 MCDCOORD@HAJOCA.COM	INSTALL PER MANUFACTURER'S RECOMMENDATIONS
8	DIAPER CONTAINER (OPTIONAL)	–	BY OWNER	
9	CLOTHES HOOK	BRADLEY 917	HUGHES SUPPLY (866) 310-3576 MCDCOORD@HAJOCA.COM	
10	COAT RACK (CREW ROOM & BDAP)	BRADLEY 9944	HUGHES SUPPLY (866) 310-3576 MCDCOORD@HAJOCA.COM	

NOTES:
1) SEE 4/A4.0 FOR ACCESSORY MOUNTING HEIGHTS
2) SELECT ONE ITEM FROM ITEM GROUPS 4 & 6, VERIFY WITH AREA CONSTRUCTION MANAGER.
3) CUT BACK-UP SUPPORTS BETWEEN STUDS SO FACE OF SUPPORT IS FLUSH W/WALL STUD

3 / A4.0 **RESTROOM ACCESSORY SCHEDULE**

REV	DATE	DESCRIPTION	BY
1	04/08/2025	COUNTY COMMENTS, M.O. OC COMMENTS, & UTILITY COORDINATION	
2	05/09/2025	PLAYPLACE ADDITION	

REGISTERED ARCHITECT JEREMY WILLIAMS 17926 STATE OF TEXAS

JAW Architects, Inc.
Jeremy Williams, Architect
Phone: 817-703-3387
Email: jeremy@jaw-arch.com

PREPARED BY:

© 2025 McDonald's USA, LLC

PREPARED FOR: McDonald's USA, LLC

These drawings and specifications are the confidential and proprietary property of McDonald's USA, LLC and shall not be copied or reproduced without written authorization. The contract documents were prepared for use on this specific site in conjunction with its issue date and are not to be used at any other location. The reproduction of these drawings for reference or example on another project requires the express written consent of McDonald's USA, LLC. Reproduction of the special documents for reuse on another project is not authorized.

DRAWN BY: JAW
STD ISSUE DATE 2024
REVIEWED BY JAW
DATE ISSUED 10/11/2024

TITLE: 2024 STANDARD BUILDING – BB20
4584-WOOD/WOOD

DESCRIPTION
WOOD BEARING WALLS WITH HARDIE SIDING
WOOD ROOF TRUSS FRAMING
EFS/BATTEN/METAL/HARDIE SIDING EXTERIOR FINISHES

SITE ID 042-3591
SITE ADDRESS NWC OF FM 460 & FM 740, FORNEY TEXAS

JAWA 24-0151

SHEET NO. A4.0
RESTROOM PLAN

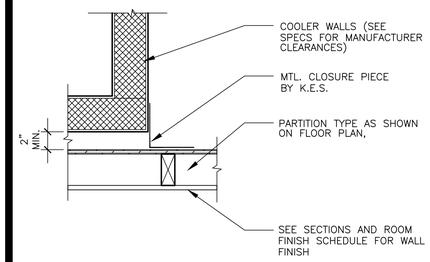

1 / A4.1 **CLOSURE DETAIL @ COOLER**
1 1/2"=1'-0"

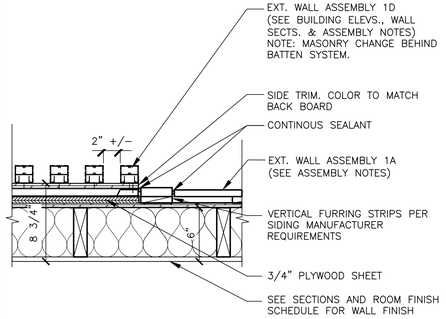

2 / A4.1 **BATTEN TO HARDIE PLANK TRANSITION**
1 1/2"=1'-0"

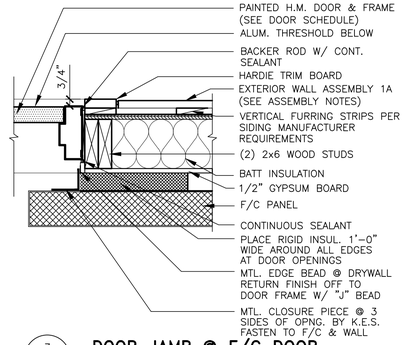

3 / A4.1 **DOOR JAMB @ F/C DOOR**
1 1/2"=1'-0"

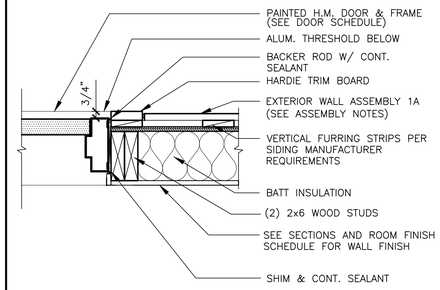

4 / A4.1 **EXT.DOOR JAMB DETAIL**
1 1/2"=1'-0"

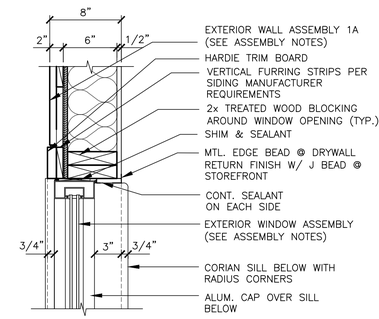

5 / A4.1 **CREW WINDOW JAMB DETAIL**
1 1/2"=1'-0"

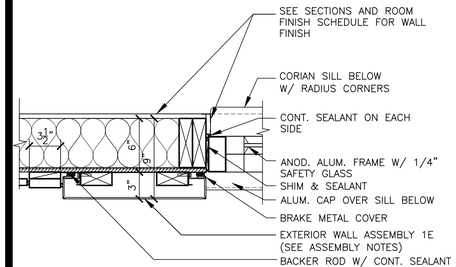

6 / A4.1 **ORDER WINDOW JAMB DETAIL**
1 1/2"=1'-0"

NOTE: SOME DECOR REQUIRES CORIAN FINISH. 100% SILICONE ADHESIVE MUST BE USED TO ATTACH TO STEEL

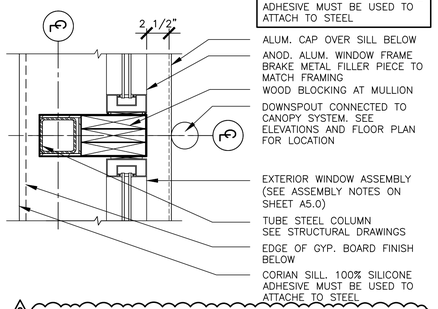

2 / A4.1 **PLAYPLACE DETAIL @ COLUMN**
1 1/2"=1'-0"

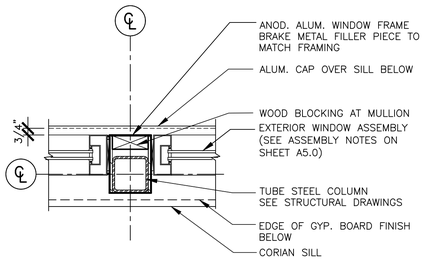

8 / A4.1 **DETAIL @ COLUMN**
1 1/2"=1'-0"

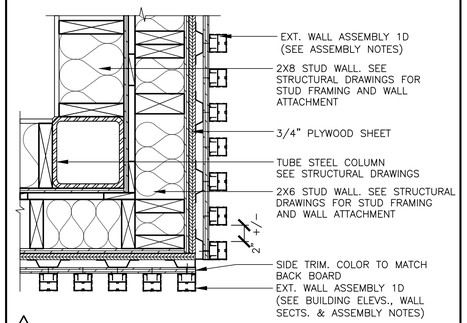

9 / A4.1 **CORNER DETAIL @ PLAYPLACE**
1 1/2"=1'-0"

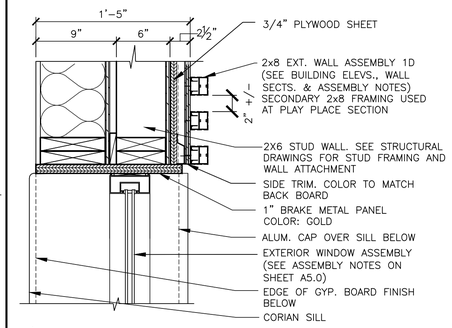

2 / A4.1 **PLAYPLACE WINDOW JAMB DETAIL**
1 1/2"=1'-0"

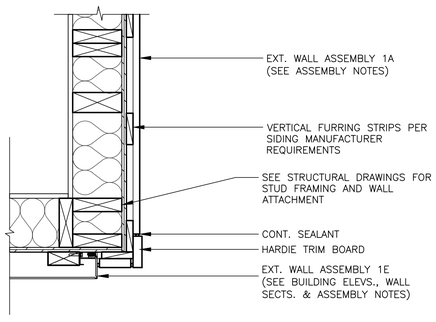

11 / A4.1 **CORNER DETAIL @ DT SURROUND**
1 1/2"=1'-0"

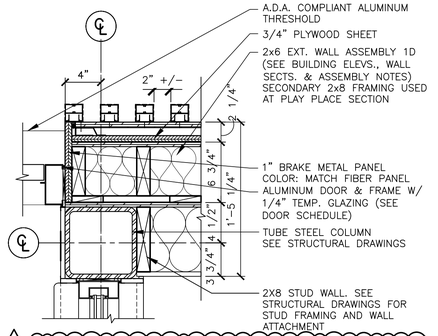

2 / A4.1 **DETAIL @ COLUMN**
1 1/2"=1'-0"

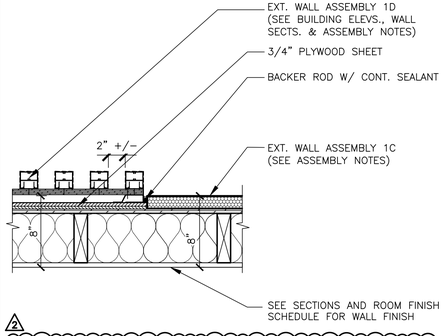

2 / A4.1 **BATTEN TO EIFS TRANSITION**
1 1/2"=1'-0"

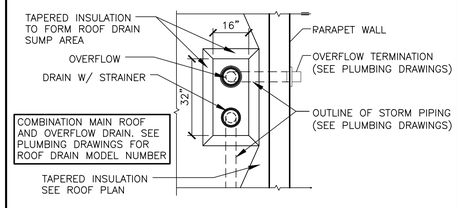

14 / A4.1 **ROOF DRAIN DETAIL**
1/4"=1'-0"

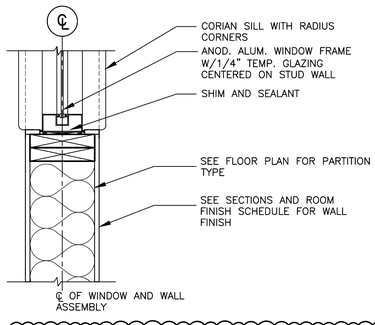

2 / A4.1 **JAMB DETAIL @ INTERIOR WALL**
1 1/2"=1'-0"

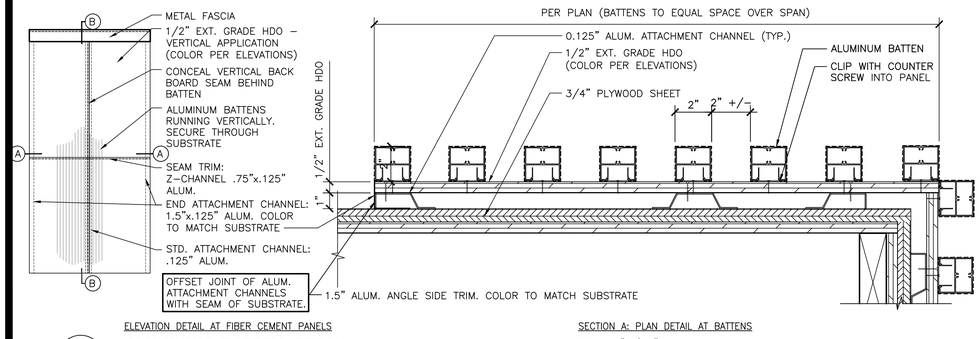

ELEVATION DETAIL AT FIBER CEMENT PANELS

16 / A4.1 **ALUMINUM BATTEN DETAIL**
1/4"=1'-0"

SECTION A: PLAN DETAIL AT BATTENS
SCALE: 3"=1'-0"

ALL SUBSTRATE, HAT CHANNELS AND TRIM BY GC. PRIME AND PAINT ALL SIDES AND EDGES PRIOR TO INSTALLING

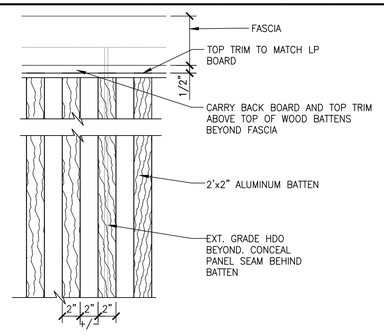

ELEVATION DETAIL AT BATTEN JOINTS
SCALE: 1 ½"=1'-0"

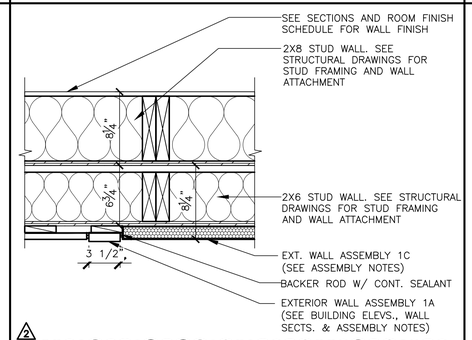

2 / A4.1 **HARDIE TO EIFS TRANSITION**
1 1/2"=1'-0"

18 / A4.1 –
–

REV	DATE	DESCRIPTION	BY
1	04/08/2025	COUNTY COMMENTS, M-O OC COMMENTS, & UTILITY COORDINATION	
2	05/09/2025	PLAYPLACE ADDITION	

REGISTERED ARCHITECT JEREMY WILLIAMS 21926 STATE OF TEXAS

PREPARED BY:
JAW Architects, Inc.
Jeremy Williams, Architect
Phone: 817.920.5387
Email: jeremy@jaw-arch.com

PREPARED FOR:
McDonald's USA, LLC

© 2024 McDonald's USA, LLC
These drawings and specifications are the confidential and proprietary property of McDonald's USA, LLC, and shall not be copied or reproduced without written authorization. The contract documents were prepared for use on this specific site in conjunction with its issue date and are not suitable for reuse on another project or at other locations. These drawings for reference or example on another project required the services of properly licensed architects and engineers. Reproduction of the contract documents for reuse on another project is not authorized.

DRAWN BY: JAW
STD ISSUE DATE 2024
REVIEWED BY: JAW
DATE ISSUED 10/11/2024

TITLE: 2024 STANDARD BUILDING – BB20 4584–WOOD/WOOD
DESCRIPTION: WOOD BEARING WALLS WITH HARDIE SIDING WOOD ROOF TRUSS FRAMING EIFS/BATTEN/METAL/HARDIE SIDING EXTERIOR FINISHES
SITE ID: 042–3591
SITE ADDRESS: NWC OF FM 460 & FM 740, FORNEY TEXAS

SHEET NO. JAWA 24–0151
A4.1
PLAN DETAILS

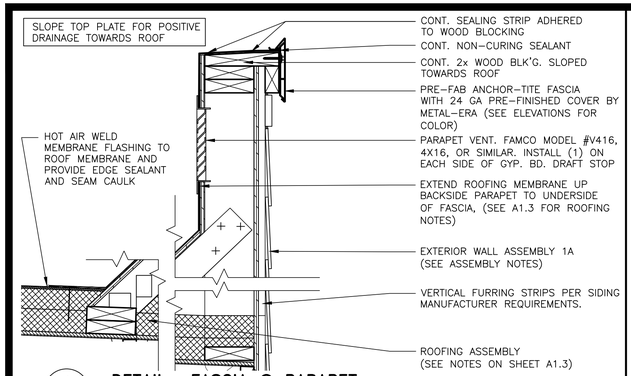

1 A5.0 **DETAIL– FASCIA @ PARAPET**
1 1/2" = 1'-0"

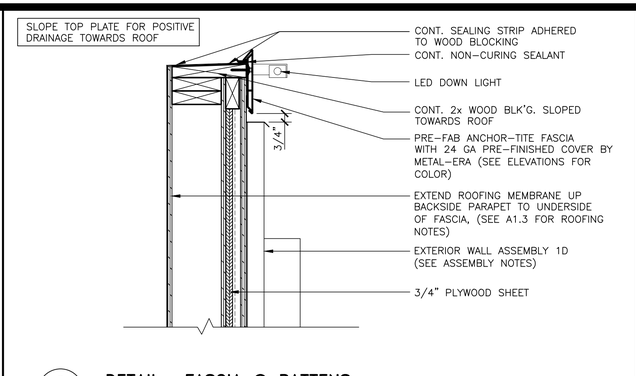

2 A5.0 **DETAIL– FASCIA @ BATTENS**
1 1/2" = 1'-0"

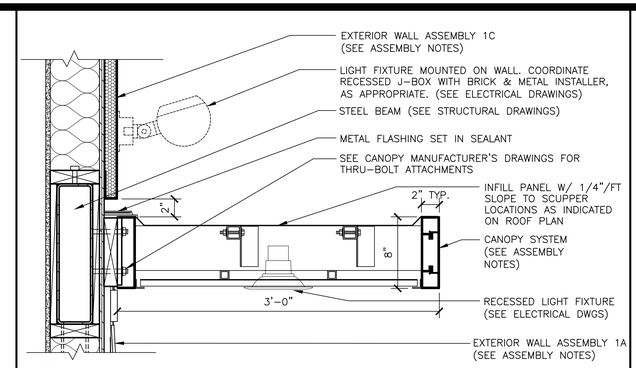

3 A5.0 **DETAIL– CANOPY ABOVE WINDOW**
1 1/2" = 1'-0"

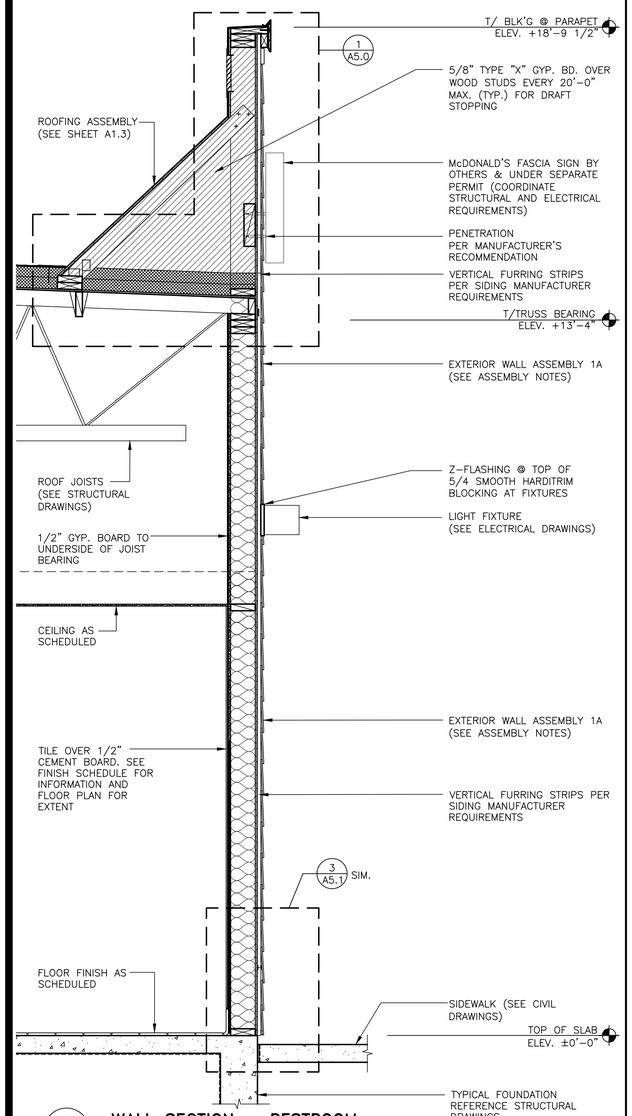

5 A5.0 **WALL SECTION – RESTROOM**
3/4" = 1'-0"

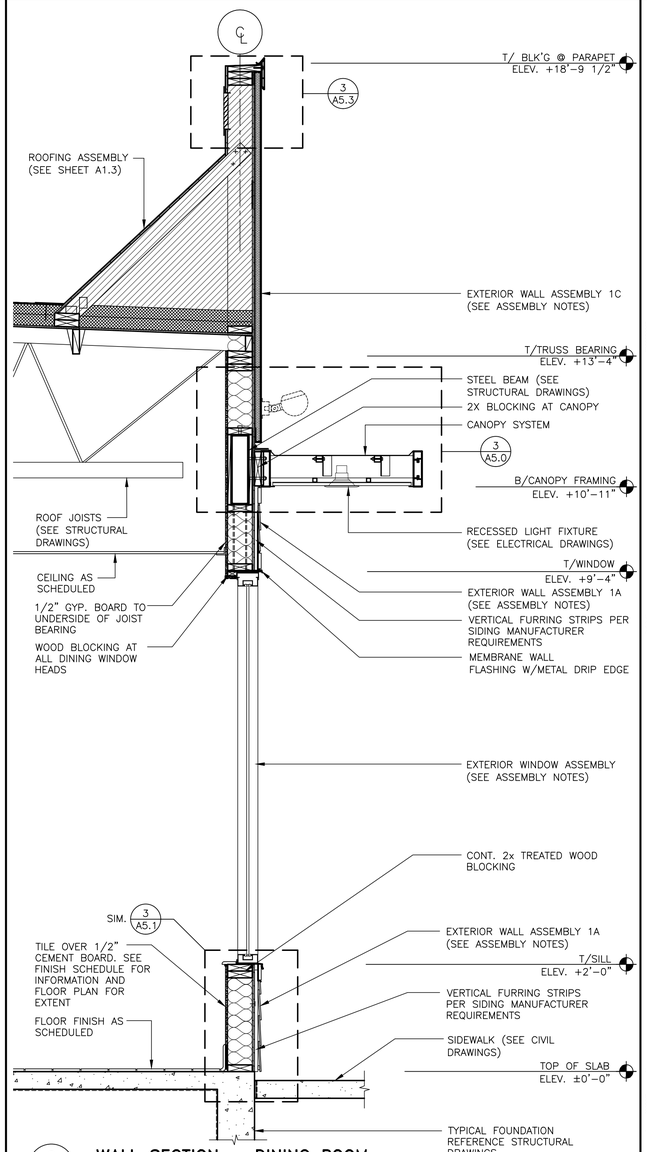

6 A5.0 **WALL SECTION – DINING ROOM**
3/4" = 1'-0"

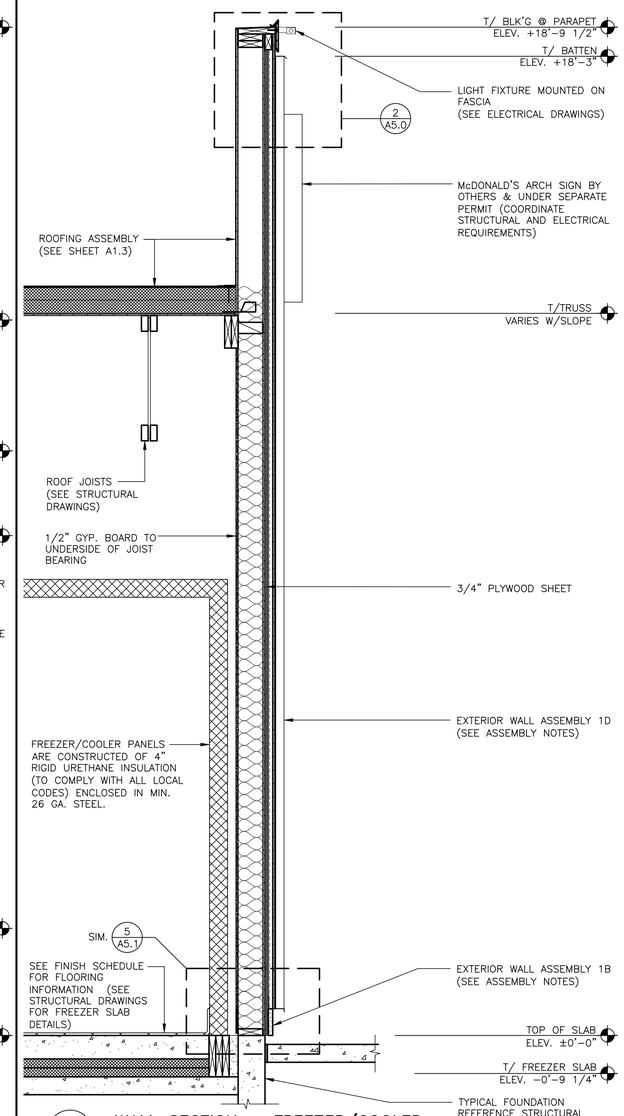

7 A5.0 **WALL SECTION – FREEZER/COOLER**
3/4" = 1'-0"

EXTERIOR WALL ASSEMBLIES

FROM EXTERIOR TO INTERIOR

1A. FIBER CEMENT HORIZONTAL LAP SIDING

1. JAMES HARDIE, HARDIEPLANK LAP SIDING, SMOOTH, 8 1/4" WIDTH, 7" EXPOSURE, HZ10, COLOR: SEE ELEVATIONS.
   a. COORDINATE FIBER CEMENT PANELS WITH FLASHING, TRIM, PARAPET WALLS AND OTHER ADJOINING WORK TO PROVIDE A LEAKPROOF, SECURE AND NONCORROSIVE INSTALLATION. INSTALL A 2" STARTER STRIP TO ENSURE A CONSISTENT PLANK ANGLE. OVERLAP PANELS 1 1/4" MIN. PROVIDE 7" EXPOSURE. SEE EXTERIOR ELEVATIONS.
   b. USE A POLYCRYSTALLINE DIAMOND-TIPPED FIBER CEMENT BLADE FOR CIRCULAR, MITER, AND TABLE SAWS.

1B. TRU EXTERIOR

1. 1"X6" PRE-PRIMED TRIM. COLOR: SEE ELEVATIONS. NAIL TRIM PIECES IN PLACE WITHIN 2" OF THE EDGE OF THE TRIM PIECE AND EVERY 16" ALONG THE LENGTH OF THE TRIM, USING MANUFACTURER APPROVED NAILS. INSTALL PER LOCAL CODES AND MANUFACTURERS SPECIFICATIONS.

1C. E.I.F.S. SYSTEM

1. "OUTSULATION PLUS MD" BY DRYVIT SYSTEMS. DRAINAGE E.I.F.S. SYSTEM (NOT BARRIER) CONSISTING OF 1 1/2" INSULATION WITH FIBER REINFORCING MESH MECHANICALLY FASTENED. USE "PANZER 20 ULTRA-HIGH IMPACT MESH" IN AREAS BELOW 8'-0" IF APPLICABLE. FINISH: HYDROPHOBIC. TEXTURE: FINESSE. INSTALL PER LOCAL CODES AND MANUFACTURERS SPECIFICATIONS ON TERMINATION AND INSTALLATION DETAILS.

1D. VERTICAL BATTEN SYSTEM

1. ALUMINUM BATTEN W/MOUNTING BACK RAIL. SIZE: 2" WIDE x 2" DEEP. REFER TO EXTERIOR ELEVATIONS FOR COLOR. INSTALL PER LOCAL CODES AND MANUFACTURERS SPECIFICATIONS ON TERMINATION AND INSTALLATION DETAILS. BY SUPPLIER. GC INSTALL
2. 1/2" EXTERIOR HIGH DENSITY OVERLAY (HDO) PLYWOOD, BB, GROUP 1. HDO BOTH FACES. APA TRADEMARKED. SAND WITH COURSE GRIT ALL SURFACES PRIOR TO PRIMING. PRIME AND PAINT BOTH SIDES AND ALL EDGES. BY GC, INSTALL BY GC. ALUM EDGE TRIM BY GC. COLOR TO MATCH SUBSTRATE.
3. ALUMINUM CHANNEL BY GC, INSTALL BY GC

VERTICAL BATTEN SYSTEM BY:
B+N INDUSTRIES (650) 393-2347
TALENE KAPEGHIAN
tkapeghian@bnind.com

TUBELITE (214) 288-5801
CHASITY DICKINSON
mcdonalds@tubeliteinc.com

1E. ALPOLIC ACM PANEL

1. 4MM PE CORE ALPOLIC METAL PANEL (4CASM-BJ CLIP SYSTEM). SEE ELEVATIONS FOR COLOR.
   PROVIDE MFG. SHOP DRAWINGS TO ARCHITECT FOR REVIEW.
   ALPOLIC DAVID KEARNEY 757-286-1005 dave_kearney@m-chem.com
2. USE 1X FURRING STRIPS W/ HARDIE BOARD SIDING. PER MANUFACTURER. (USE 3/4" PLYWOOD BEHIND BATTEN SYSTEM)
3. PERMEABLE BUILDING WRAP OVER 1/2" EXTERIOR GRADE PLYWOOD. INSTALL PER LOCAL CODES AND MFR'S SPEC'S.
4. 2x6 WOOD STUD FRAMING @ 16" O.C. (WITH CONTINUOUS DRAFTSTOP/FIRESTOP BLOCKING AT FINISH CEILING LEVEL).
5. 5 1/2" THICK UNFACED BATT INSULATION (R VALUE = 20 MIN.).
6. "CERTAINTEED MEMBRAIN" SMART VAPOR RETARDER (SEMI-VAPOR PERMEABLE) BY CERTAINTEED OR EQUAL.
7. 1/2" CEMENT BOARD SUBSTRATE FOR ALL TILE LOCATIONS. (TYP.) NON TILE LOCATIONS: 1/2" GYPSUM BOARD TO EXTEND TO DECK ABOVE. UNLESS NOTED OTHERWISE.
   ALL GYP. BOARD MUST SCORE 10 PER ASTM D3273, REFERENCE CURRENT PROJECT MANUAL.
8. SEE A1.0 & ROOM FINISH SCHEDULE FOR ADDITIONAL SUBSTRATE INFORMATION.

EXTERIOR WINDOW ASSEMBLY

(STOREFRONT & ENTRANCE SYSTEM)

GLAZING REQ'S: U VALUE = 0.38 U VALUE "DOOR"= 0.77 SHGC = 0.25

1. DARK BRONZE ANODIZED ALUMINUM FRAME, THERMALLY BROKEN WITH HEAD RECEIVER CHANNEL.
2. 1" TEMPERED INSULATED GLAZING
3. PROVIDE FLASHING AT HEAD & SILL – CONTINUOUS SEALANT.
4. PROVIDE METAL SILL CAP AS SHOWN IN DETAILS
5. 1/2" CORIAN SILL AT INTERIOR

CANOPY SYSTEM

CANOPY INFORMATION SHOWN IN CONSTRUCTION DOCUMENTS IS FOR DESIGN INTENT ONLY. APPROVED MANUFACTURERS SHALL PROVIDE A COMPLETE AND CODE COMPLIANT FINAL DESIGN. REFER TO ELEVATIONS FOR COLOR OF ELEMENTS

1. CANOPY STRUCTURE/OUTRIGGERS: CONT. 2" x 8" PAINTED ALUM. TUBE. PROVIDE CLOSURE PIECE WHERE TUBE ENDS ARE EXPOSED.
2. WHERE INDICATED ON ROOF PLAN, PROVIDE PAINTED ALUM. PANEL INFILL WITH INTEGRAL SCUPPER TO MATCH OUTRIGGERS. PANEL TO PROVIDE POSITIVE SLOPE FOR DRAINAGE.
3. SYSTEM SHALL ALLOW FOR MOVEMENT AT EXPANSION JOINTS AND FOR MOVEMENT OF EXTERIOR WALL SYSTEM ON WHICH THE CANOPY IS MOUNTED.
4. STRUCTURAL ATTACHMENTS & LOAD CALCULATIONS SHALL BE FURNISHED BY CANOPY SYSTEM DESIGNER OF RECORD. SUPPLIER'S DESIGNER OF RECORD SHALL DESIGN PER PREVAILING CODES.
5. CANOPY SYSTEM SHALL BE SELECTED FROM ONE OF THE SUPPLIERS LISTED BELOW.
6. MANUFACTURER SHALL PROVIDE INSTALLER WITH INSTALLATION INSTRUCTIONS. MANUFACTURER SHALL DESIGN CANOPY IN ACCORDANCE WITH THE WALL SYSTEM AND BLOCKING AS INDICATED IN THE CONSTRUCTION DOCUMENTS.
7. INSTALLER SHALL NOTIFY CANOPY DESIGNER OF RECORD, McDONALD'S ACM, G.C. AND ARCHITECT OF ANY DEFICIENCIES THAT WOULD NOT ALLOW FOR THE PROPER INSTALLATION OF THE CANOPY. CANOPY SHALL NOT BE INSTALLED UNTIL DEFICIENCIES HAVE BEEN CORRECTED IN ACCORDANCE WITH THE CONSTRUCTION DOCUMENTS AND THE CANOPY MANUFACTURER'S INSTALLATION INSTRUCTIONS.

CANOPY SYSTEM BY:

AWNEX (770) 704-7140
www.awnexinc.com

ALL-LITE (817) 509-2300
www.alllite.com

GREENHECK (715) 355-3942
www.greenheck.com

4 A5.0 **ASSEMBLY NOTES**

REV	DATE	DESCRIPTION	BY
1	04/08/2025	COUNTY COMMENTS, MUD CC COMMENTS, & UTILITY COORDINATION	

PREPARED BY:
JAW Architects, Inc.
Jeremy Williams, Architect
Phone: 817/702-3387
Email: jeremy@jaw-arch.com

© 2025 McDonald's USA, LLC

PREPARED FOR:
McDonald's USA, LLC

These drawings and specifications are the confidential and proprietary property of McDonald's USA, LLC and shall not be copied or reproduced without written authorization. The contract documents were prepared for use on this specific site in conjunction with its issue date only. For use on any other site in conjunction with its issue date only, these drawings for reference or example on another project requires the services of appropriate licensed architects and engineers. Reproduction of the contract documents for reuse on another project is not authorized.

DRAWN BY: JAW
STD. ISSUE DATE: 2024
REVIEWED BY: JAW
DATE ISSUED: 10/11/2024

TITLE: 2024 STANDARD BUILDING – BB20
4584–WOOD/WOOD

DESCRIPTION: WOOD BEARING WALLS WITH HARDIE SIDING
WOOD ROOF TRUSS FRAMING
EIFS/BATTEN/METAL/HARDIE SIDING EXTERIOR FINISHES

SITE ID: 042–3591
SITE ADDRESS: NWC OF FM 460 & FM 740, FORNEY TEXAS

SHEET NO. JAWA 24–0151
A5.0
WALL SECTIONS

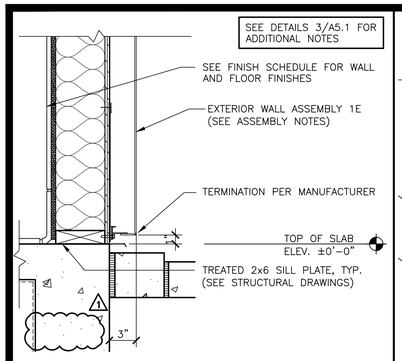

1 A5.1 **DETAIL– APOLIC TERMINATION**
1 1/2" = 1'-0"

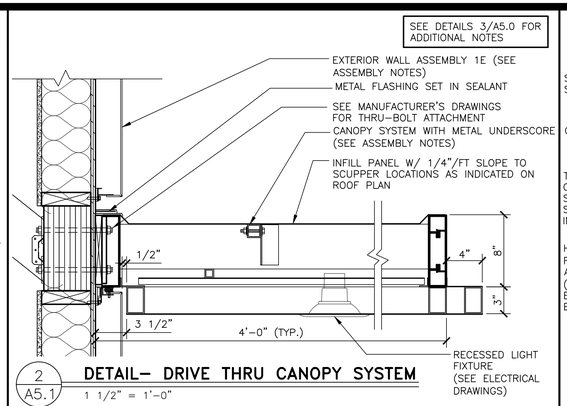

2 A5.1 **DETAIL– DRIVE THRU CANOPY SYSTEM**
1 1/2" = 1'-0"

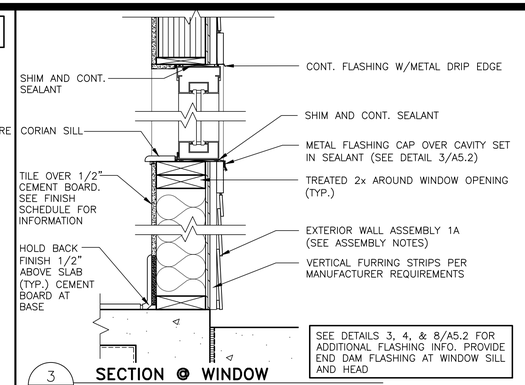

3 A5.1 **SECTION @ WINDOW**
1 1/2" = 1'-0"

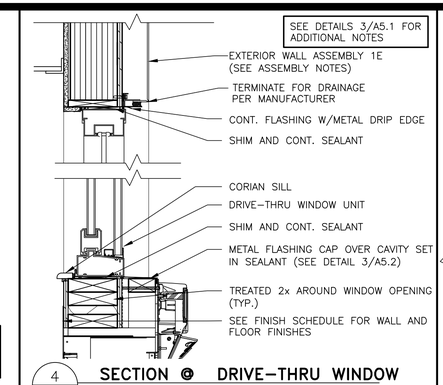

4 A5.1 **SECTION @ DRIVE–THRU WINDOW**
1 1/2" = 1'-0"

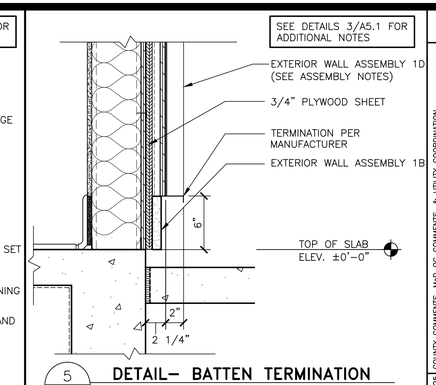

5 A5.1 **DETAIL– BATTEN TERMINATION**
1 1/2" = 1'-0"

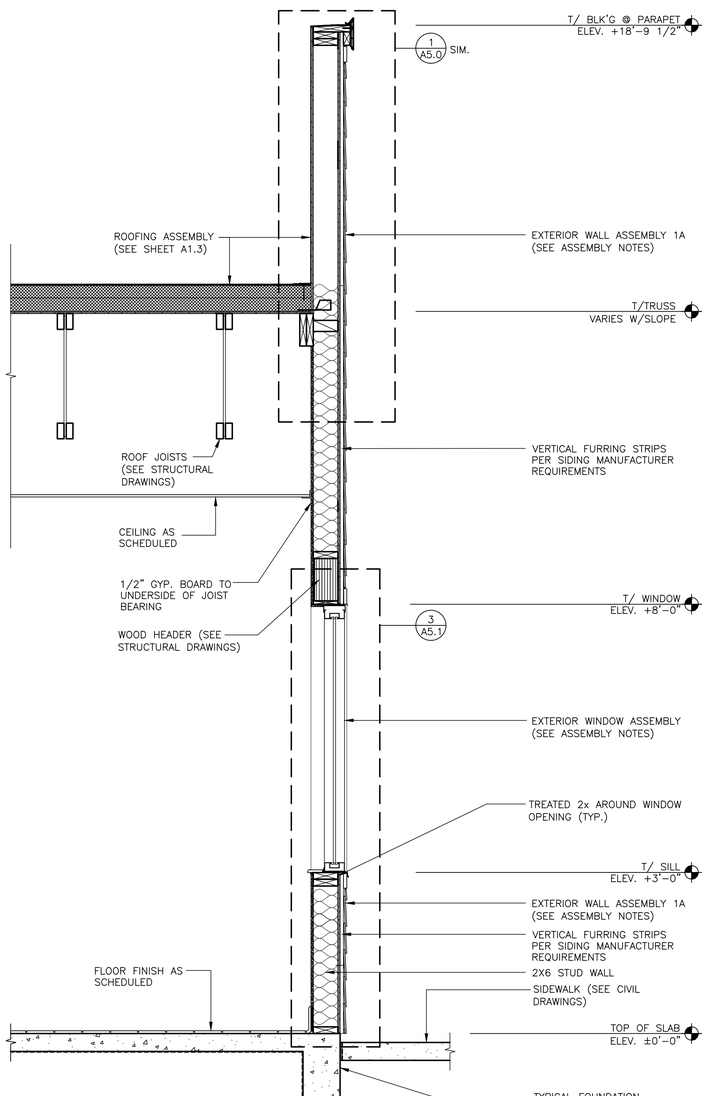

6 A5.1 **WALL SECTION – CREW ROOM**
3/4" = 1'-0"

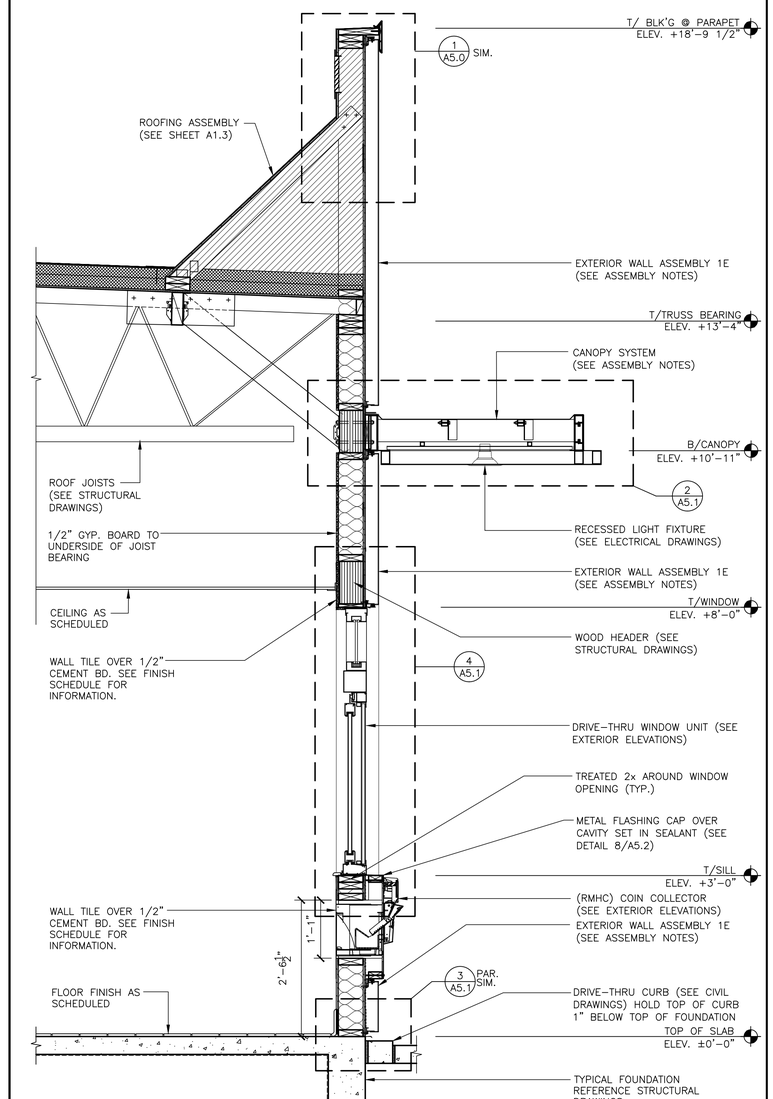

7 A5.1 **WALL SECTION – ORDER WINDOW**
3/4" = 1'-0"

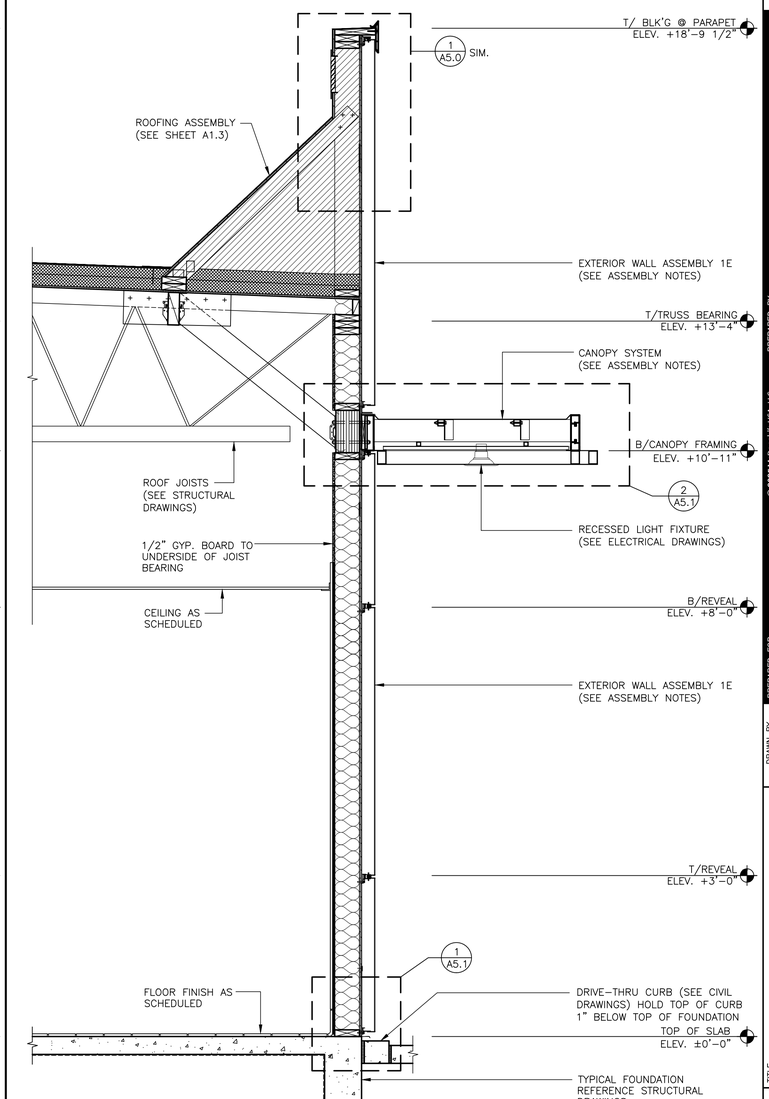

8 A5.1 **WALL SECTION – APOLIC ACM PANELS**
3/4" = 1'-0"

REV	DATE	DESCRIPTION	BY
1	04/08/2025	COUNTY COMMENTS, M-O, QC COMMENTS, & UTILITY COORDINATION	

REGISTERED ARCHITECT JEREMY WILLIAMS 7926 STATE OF TEXAS

PREPARED BY:
JAW ARCHITECTS
JAW Architects, Inc.
Jeremy Williams, Architect
Phone: 817-705-3397
Email: jeremy@jaw-arch.com

PREPARED FOR:
McDonald's USA, LLC

© 2025 McDonald's USA, LLC
These drawings and specifications are the confidential and proprietary property of McDonald's USA, LLC and shall not be copied or reproduced without written authorization. The contract documents were prepared for use on this specific site in conjunction with its issue date and are not suitable for re-bidding or re-pricing at a later date. Reuse of these drawings for reference or example on another project requires the services of properly licensed architects and engineers. Reproduction of the contract documents for re-use on another project is not authorized.

DRAWN BY JAW
STD ISSUE DATE 2024
REVIEWED BY JAW
DATE ISSUED 10/11/2024

TITLE 2024 STANDARD BUILDING – BB20
4584–WOOD/WOOD

DESCRIPTION
WOOD BEARING WALLS WITH HARDIE SIDING
WOOD ROOF TRUSS FRAMING
EIFS/BATTEN/METAL/HARDIE SIDING EXTERIOR FINISHES

SITE ID 042–3991
SITE ADDRESS NWC OF FM 460 & FM 740, FORNEY TEXAS

SHEET NO. JAWA 24–0151
A5.1
WALL SECTIONS

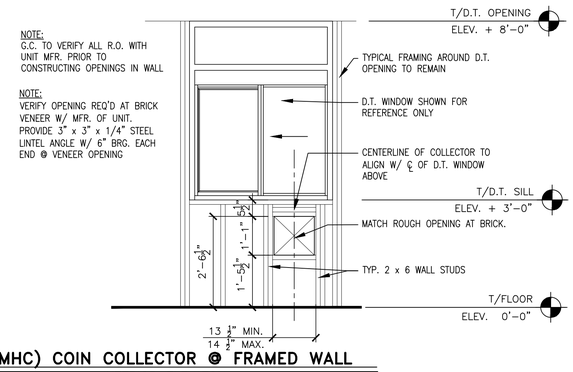

1 A5.2 **(RMHC) COIN COLLECTOR @ FRAMED WALL**
1/2" = 1'-0" INTERIOR ELEVATON

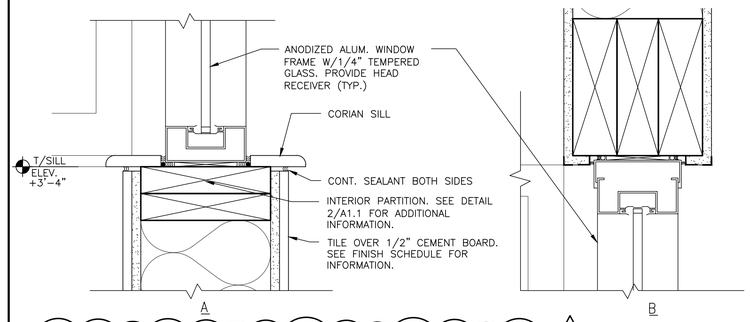

9 A5.2 **HEAD & SILL INTERIOR VESTIBULE WALL**
3" = 1'-0"

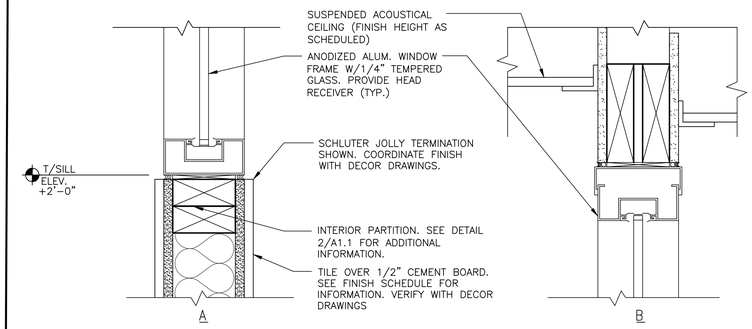

2 A5.2 **HEAD & SILL INTERIOR VESTIBULE WALL**
3" = 1'-0"

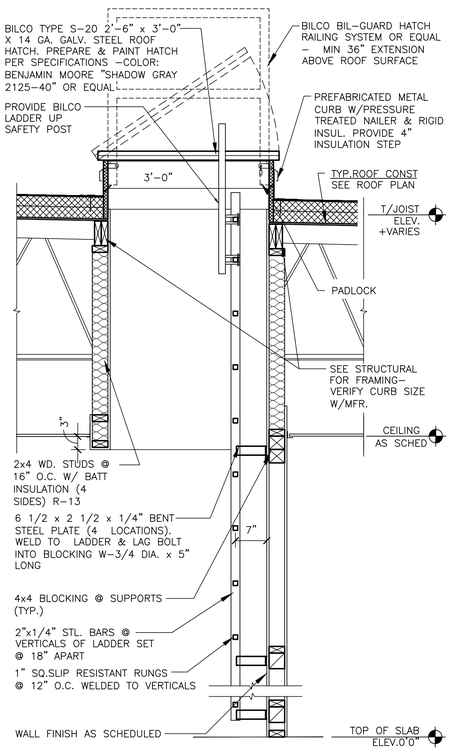

10 A5.2 **SECTION @ INTERIOR LADDER**
3/4" = 1'-0"

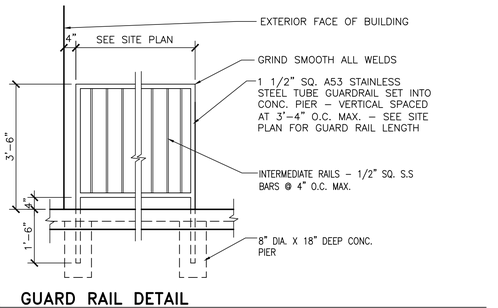

11 A5.2 **GUARD RAIL DETAIL**
1/2" = 1'-0"

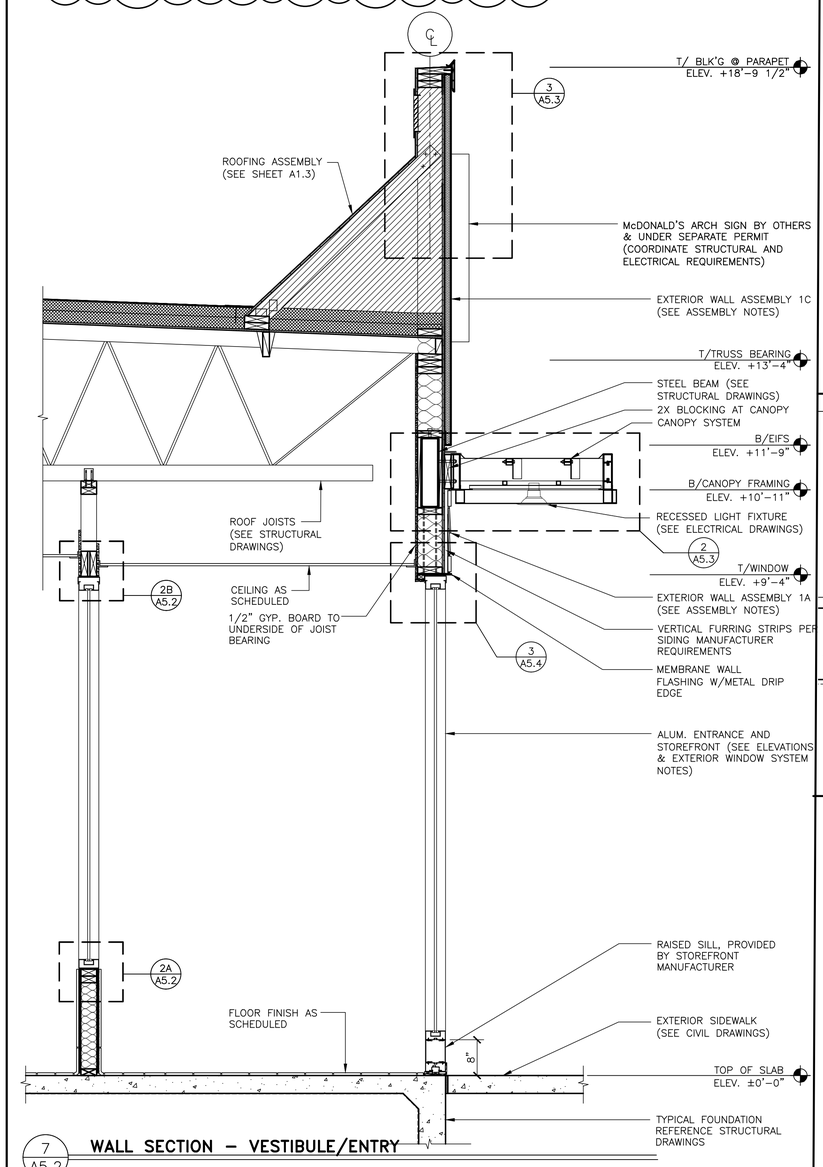

7 A5.2 **WALL SECTION - VESTIBULE/ENTRY**
-

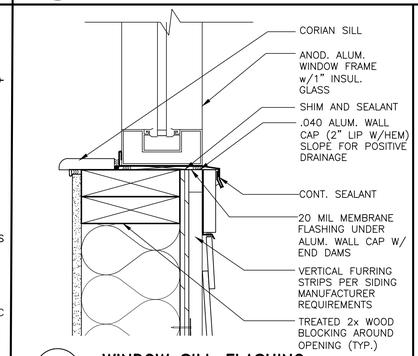

3 A5.2 **WINDOW SILL FLASHING**
3" = 1'-0"

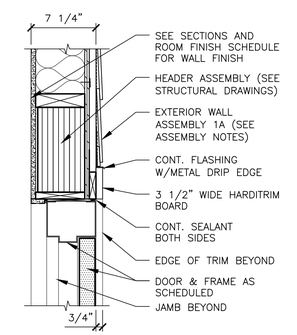

5 A5.2 **SECTION @ DOOR HEAD**
1 1/2" = 1'-0"

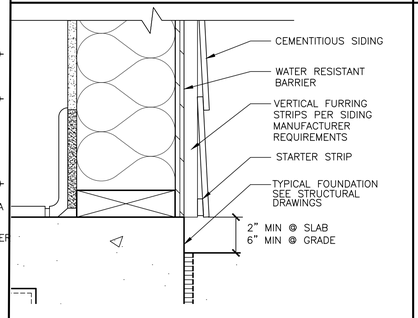

4 A5.2 **FLASHING DETAIL @ FOUNDATION**
3" = 1'-0"

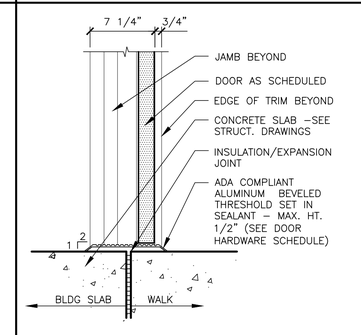

6 A5.2 **SECTION @ DOOR SILL**
1 1/2" = 1'-0"

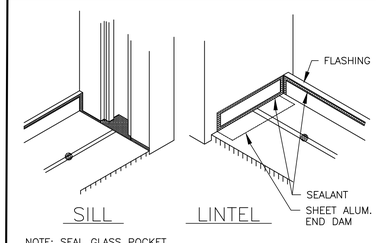

NOTE: SEAL GLASS POCKET OF WINDOW JAMB AT SILL.

NOTE: SEALANT ON BACK LEG OF FLASHING TO BE APPLIED PRIOR TO INSTALLATION OF FRAME.

NOTE: SEAL OVER HEADS OF ALL PERIMETER OPENINGS.

8 A5.2 **FLASHING DETAIL @ JAMB**
N.T.S.

REV	DATE	DESCRIPTION	BY
1	04/08/2025	COUNTY COMMENTS, M/O OC COMMENTS, & UTILITY COORDINATION	
2	05/09/2025	PLATPLACE ADDITION	

PREPARED BY:
JAW ARCHITECTS, INC.
Jeremy Williams, Architect
Phone: 817.705.5387
Email: jeremy@jaw-arch.com
REGISTERED ARCHITECT JEREMY WILLIAMS 1926 STATE OF TEXAS

PREPARED FOR:
McDonald's USA, LLC

© 2024 McDonald's USA, LLC
These drawings and specifications are the confidential and proprietary property of McDonald's USA, LLC, and shall not be copied or reproduced without written authorization. The contract documents were prepared for use on this specific site in conjunction with its issue date and are not suitable for use in other locations or at a later date. Reproduction of these drawings for reference or example on another project requires the express permission of properly licensed architects and engineers. Reproduction of the contract documents for reuse on another project is not authorized.

DRAWN BY: JAW
STD ISSUE DATE 2024
REVIEWED BY JAW
DATE ISSUED 10/11/2024

TITLE: 2024 STANDARD BUILDING - BB20 4584-WOOD/WOOD

DESCRIPTION	
WOOD BEARING WALLS WITH HARDIE SIDING	
WOOD ROOF TRUSS FRAMING	
EFS/BATTEN/METAL/HARDIE SIDING EXTERIOR FINISHES	
SITE ID	SITE ADDRESS
042-3591	NWC OF FM 460 & FM 740, FORNEY TEXAS

SHEET NO. JAWA 24-0151
A5.2
WALL SECTIONS

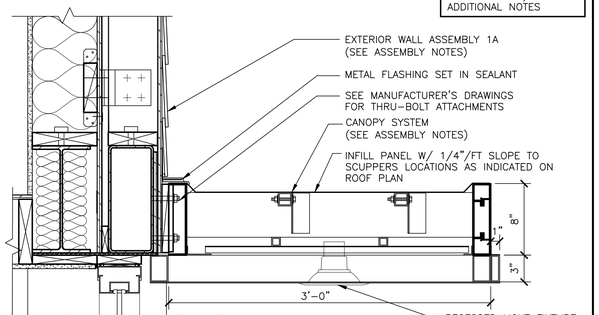

1 A5.3 DETAIL– ENTRY CANOPY @ WINDOW HEAD
1 1/2" = 1'-0"

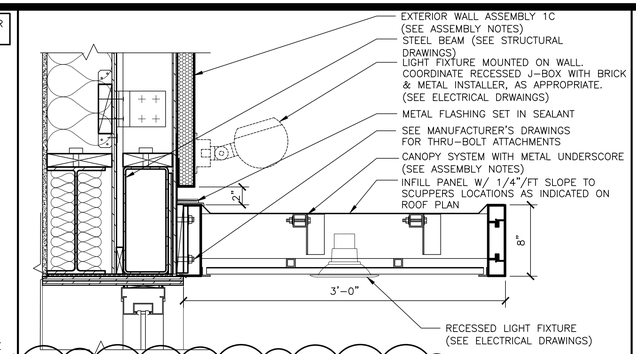

2 A5.3 DETAIL– CANOPY @ WINDOW HEAD
1 1/2" = 1'-0"

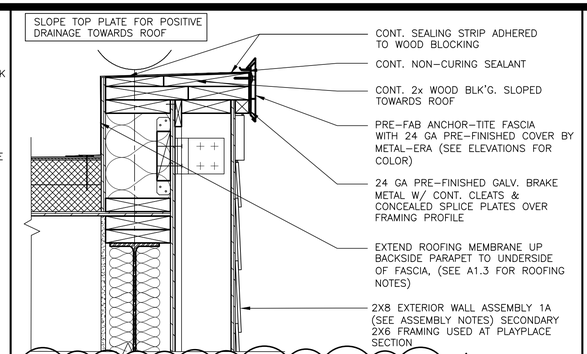

3 A5.3 DETAIL– FASCIA @ SIDE ENTRANCE
1 1/2" = 1'-0"

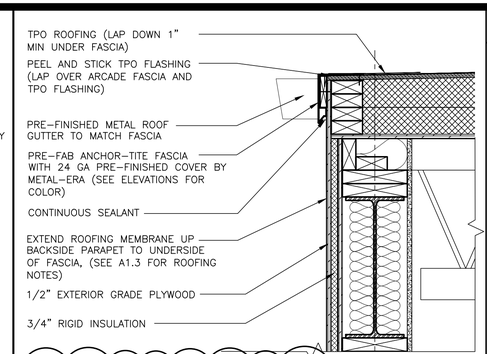

4 A5.3 DETAIL – FASCIA AT REAR
1 1/2" = 1'-0"

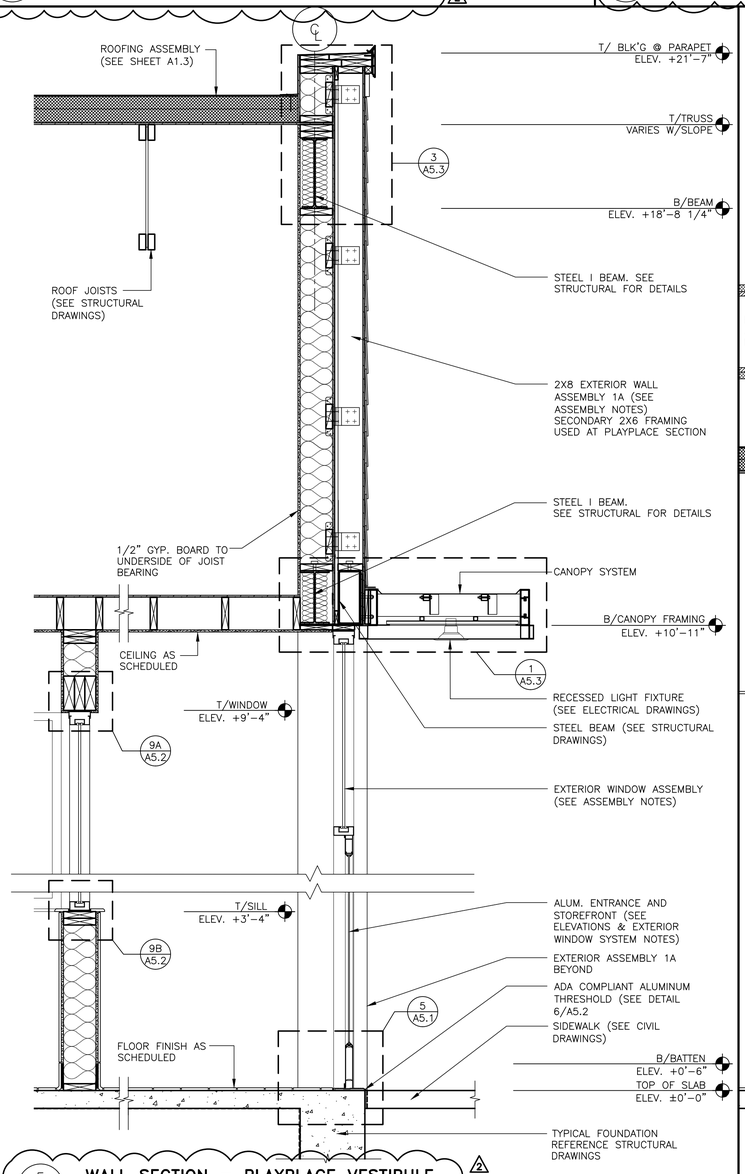

5 A5.3 WALL SECTION – PLAYPLACE VESTIBULE
3/4" = 1'-0"

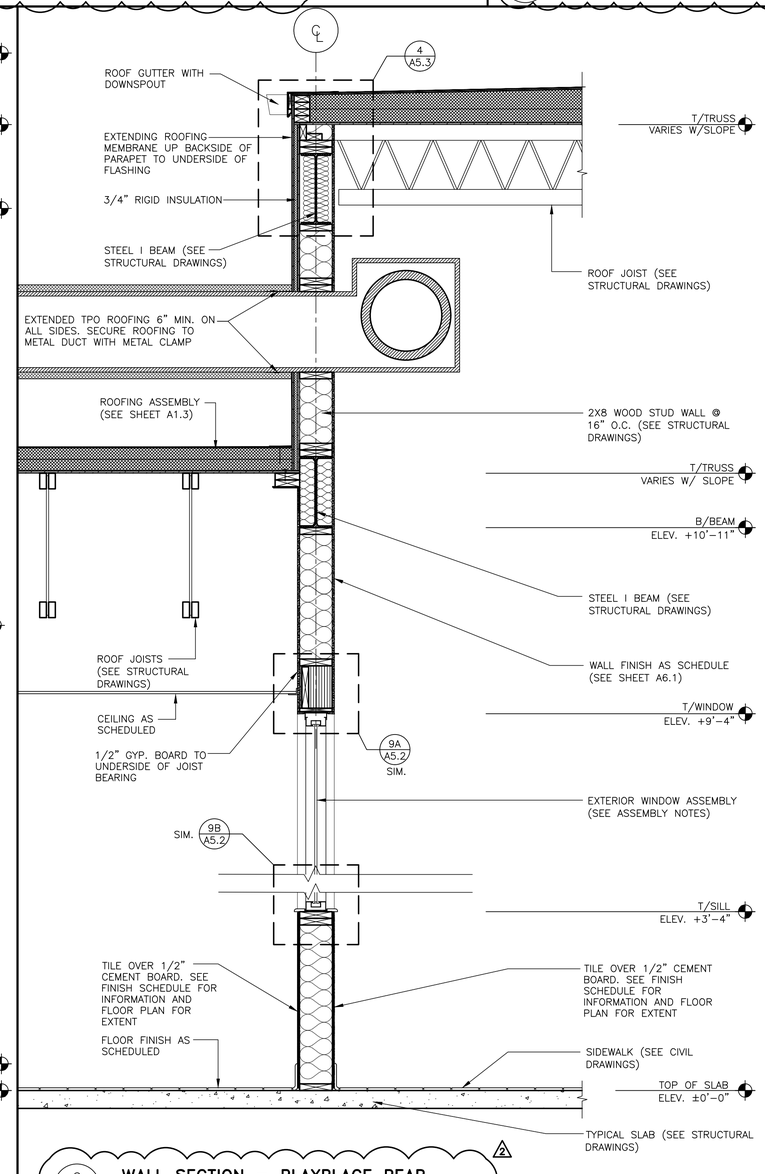

6 A5.3 WALL SECTION – PLAYPLACE REAR
3/4" = 1'-0"

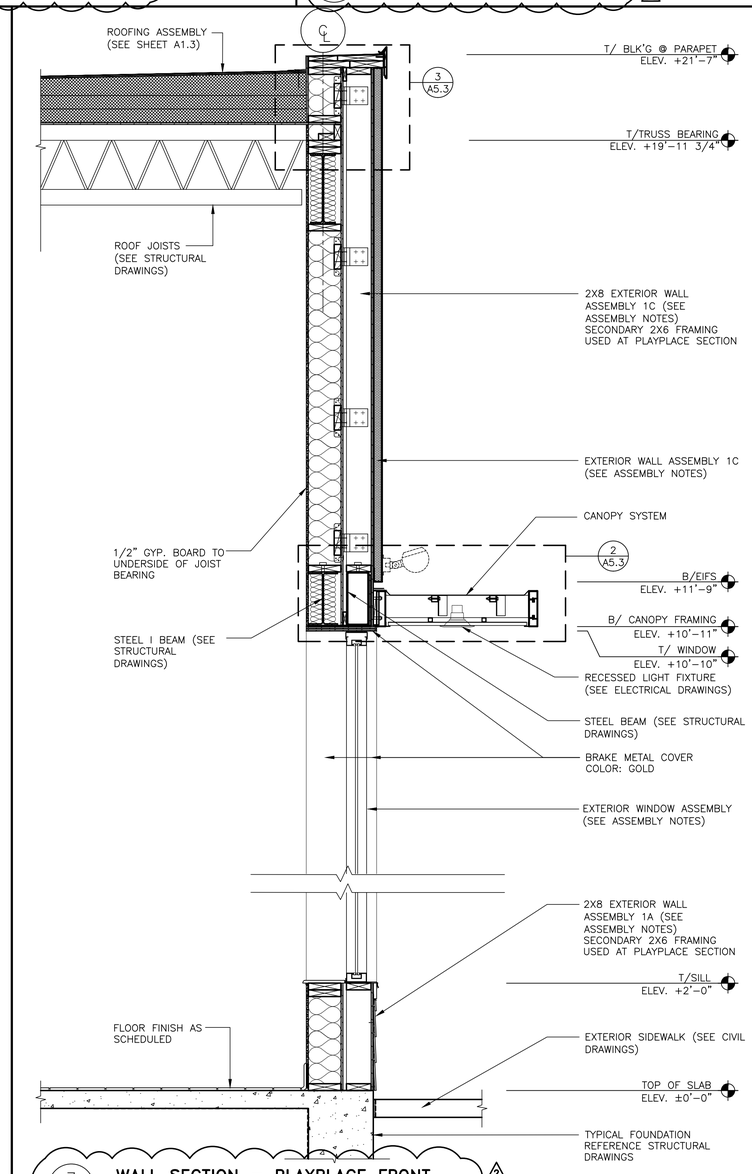

7 A5.3 WALL SECTION – PLAYPLACE FRONT
3/4" = 1'-0"

REV	DATE	DESCRIPTION	BY
1	04/08/2025	COUNTY COMMENTS, M/O OC COMMENTS, & UTILITY COORDINATION	
2	05/09/2025	PLAYPLACE ADDITION	

REGISTERED ARCHITECT JEREMY WILLIAMS 7926 STATE OF TEXAS

PREPARED BY:
JAW Architects, Inc.
Jeremy Williams, Architect
Phone: 817.705.3387
Email: jeremy@jaw-arch.com

© 2025 McDonald's USA, LLC

PREPARED FOR:
McDonald's USA, LLC

These drawings and specifications are the confidential and proprietary property of McDonald's USA, LLC and shall be treated as such. Reproduced without written authorization. The contract documents were prepared for use on this specific site in conjunction with its issue date and are not suitable for use on other projects or at other locations or at other times. These drawings for reference or example on another project requires the services of properly licensed architects and engineers. Reproduction of the contract documents for reuse on another project is not authorized.

DRAWN BY	STD ISSUE DATE
JAW	2024
REVIEWED BY	DATE ISSUED
JAW	10/11/2024

TITLE: 2024 STANDARD BUILDING – BB20
4584–WOOD/WOOD

DESCRIPTION: WOOD BEARING WALLS WITH HARDIE SIDING
WOOD ROOF TRUSS FRAMING
EIFS/BATTEN/METAL/HARDIE SIDING EXTERIOR FINISHES

SITE ID: 042–3591
SITE ADDRESS: NWC OF FM 460 & FM 740, FORNEY TEXAS

SHEET NO. JAWA 24–0151
A5.3
WALL SECTIONS

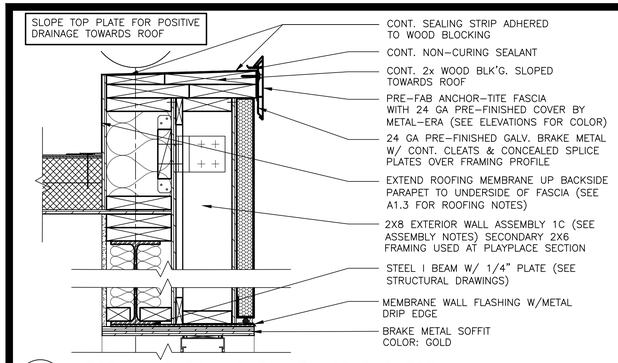

1 A5.4 **DETAIL– FASCIA @ PLAYPLACE PARAPET**
1 1/2" = 1'–0"

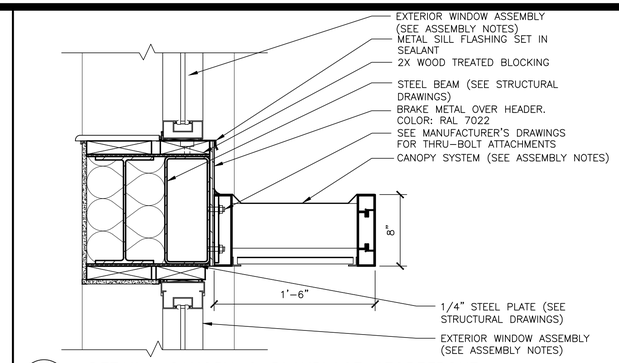

2 A5.4 **DETAIL– CANOPY @ PLAYPLACE STOREFRONT**
1 1/2" = 1'–0"

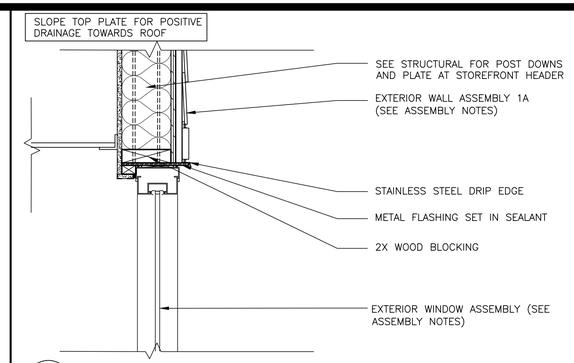

3 A5.4 **DETAIL– STOREFRONT HEADER**
1 1/2" = 1'–0"

4 A5.4 **NOT USED**
–

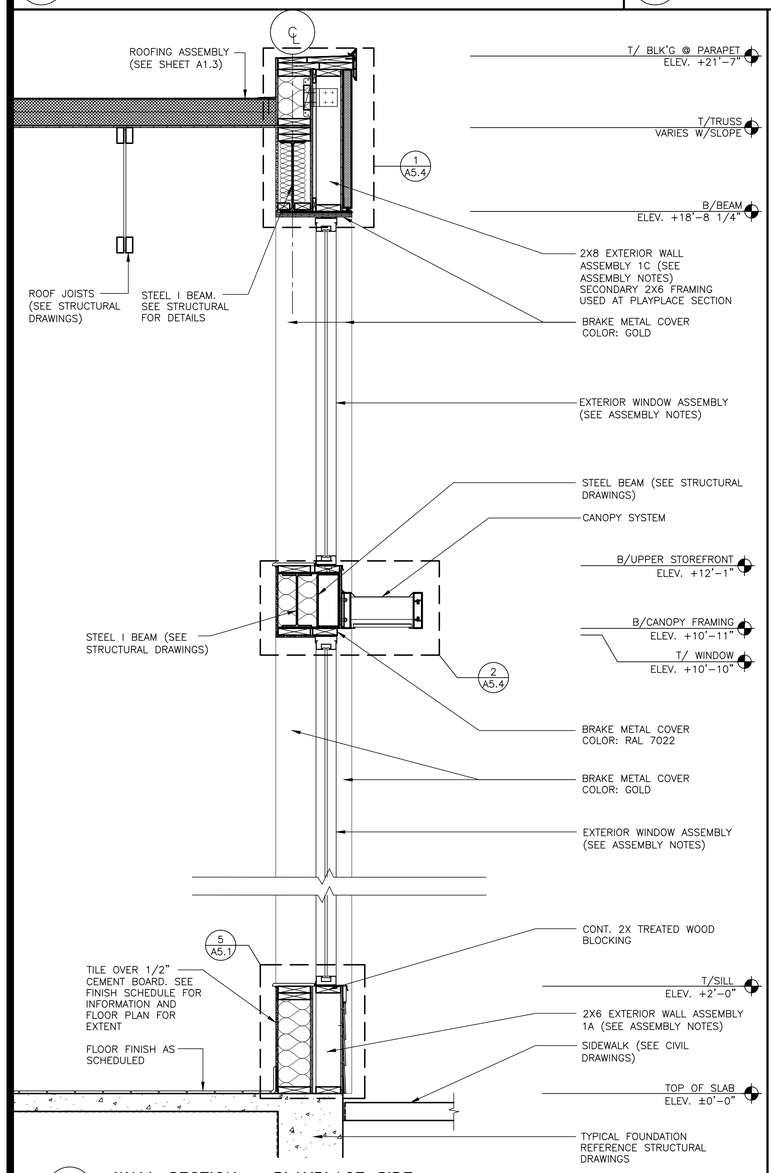

5 A5.4 **WALL SECTION – PLAYPLACE SIDE**
3/4" = 1'–0"

6 A5.4 **NOT USED**
–

7 A5.4 **NOT USED**
–

REV	DATE	DESCRIPTION	BY
1	04/08/2025	COUNTY COMMENTS, MCD QC COMMENTS, & UTILITY COORDINATION	
2	05/09/2025	PLAYPLACE ADDITION	

REGISTERED ARCHITECT JEREMY WILLIAMS 7926 STATE OF TEXAS

PREPARED BY:
JAW Architects, Inc.
Jeremy Williams, Architect
Phone: 817.926.3387
Email: jeremy@jaw-arch.com

© 2025 McDonald's USA, LLC

PREPARED FOR: McDonald's USA, LLC

These drawings and specifications are the confidential and proprietary property of McDonald's USA, LLC and shall not be used or reproduced without written authorization. The contract documents were prepared for use on this specific site in conjunction with its issue date and are not suitable for use on any other site or at a later time. Use of these drawings for reference or example on another project requires the services of properly licensed architects and engineers. Reproduction of the contract documents for reuse on another project is not authorized.

DRAWN BY: JAW
STD ISSUE DATE: 2024
REVIEWED BY: JAW
DATE ISSUED: 10/11/2024

TITLE: 2024 STANDARD BUILDING – BB20 4584–WOOD/WOOD

DESCRIPTION: WOOD BEARING WALLS WITH HARDIE SIDING
WOOD ROOF TRUSS FRAMING
EFS/BATTEN/METAL/HARDIE SIDING EXTERIOR FINISHES

SITE ID: 042–3591
SITE ADDRESS: NWC OF FM 460 & FM 740, FORNEY TEXAS

SHEET NO. 2 — HWA 24-0157
A5.4
WALL SECTIONS

FRAME TYPES

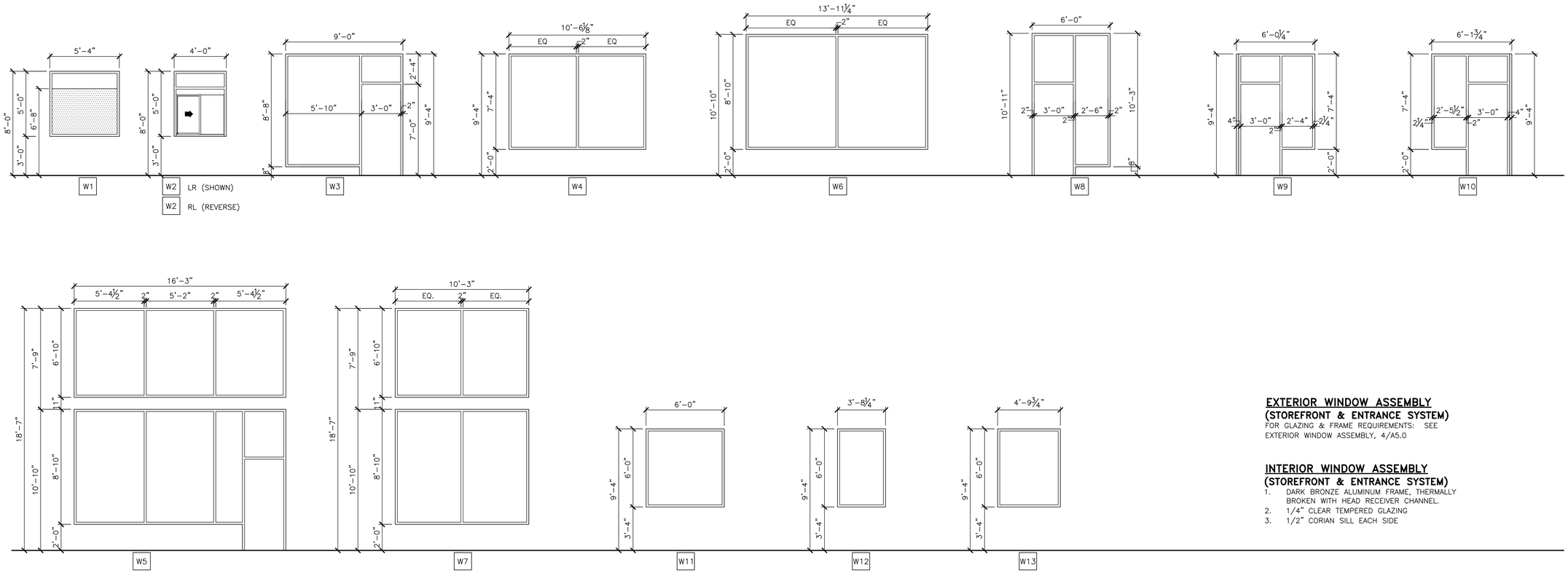

EXTERIOR WINDOW ASSEMBLY
(STOREFRONT & ENTRANCE SYSTEM)

FOR GLAZING & FRAME REQUIREMENTS: SEE EXTERIOR WINDOW ASSEMBLY, 4/A5.0

INTERIOR WINDOW ASSEMBLY
(STOREFRONT & ENTRANCE SYSTEM)

1. DARK BRONZE ALUMINUM FRAME, THERMALLY BROKEN WITH HEAD RECEIVER CHANNEL.
2. 1/4" CLEAR TEMPERED GLAZING
3. 1/2" CORIAN SILL EACH SIDE

DOOR HARDWARE

GENERAL NOTES:

1. ALL EXIT DOORS SHALL BE KEYLESS IN THE DIRECTION OF EGRESS.
2. THE OPENING FORCE OF ALL EXT. PUSH/PULL DOORS SHALL NOT EXCEED 8 1/2 LBS.
3. THE OPENING FORCE OF ALL INTERIOR PUSH/PULL DOORS SHALL NOT EXCEED 5 LBS.
4. PROVIDE PANIC HARDWARE FOR ALL EXTERIOR DOORS AS NOTED ON THE DOOR SCHEDULE.
5. ALL DOOR HARDWARE SHALL NOT REQUIRE TIGHT GRASPING, TIGHT PINCHING OR TWISTING OF THE WRIST TO OPERATE.

DOOR #1 – ENTRY DOOR/EMERGENCY EXIT

1. 1 EA CLOSER LCN 4021 x 18
2. 3 EA HINGES OFFSET PIVOT ANSI –A–156.4 GRADE 1; PROVIDE EXPOSED PARTS OF CAST ALUMINUM ALLOY, AS SUPPLIED BY DOOR MANUFACTURER.
3. 1 EA PULL HANDLE ROCKWOOD MFG. MODEL: RM3311. SIZE: 1–1/4" DIA. CTC: 5'–10". FINISH: TO MATCH STOREFRONT DOOR. OFFSET MOUNTING: TYPE 1XHD – THRU BOLT HEAVY DUTY
4. 1 EA PANIC HARDWARE ADAMS RITE MFG. CO. 8800 SERIES WITH OUTSIDE CYLINDER (FINISH TO MATCH STOREFRONT DOOR)
5. 1 EA THRESHOLD NATIONAL GUARD PRODUCTS, INC. SADDLE TYPE THRESHOLD 325, 36" WIDE x 1/2" RISE (ADA ACCESSIBLE).
6. 1 EA WEATHER STRIPPING: PROVIDE COMPRESSION WEATHER STRIPPING AGAINST FIXED STOPS. AT OTHER EDGES PROVIDE SLIDING WEATHER STRIPPING RETAINED IN ADJUSTABLE STRIP MORTISED INTO DOOR EDGE. PROVIDE EPDM OR VINYL GASKET WEATHER STRIPPING IN BOTTOM DOOR RAIL ADJUSTABLE FOR CONTACT W/ THRESHOLD.
7. 1 EA SIGN MOUNT ONTO DOOR, TO READ "THIS DOOR MUST REMAIN UNLOCKED WHENEVER THE BUILDING IS OCCUPIED/DURING BUSINESS HOURS."

DOOR #2 & #2A– VESTIBULE

1. 1 EA CLOSER LCN 4041 x 18
2. 3 EA HINGES OFFSET PIVOT ANSI –A–156.4 GRADE 1; BY DOOR MANUFACTURER.
3. 1 EA PUSH/PULL HANDLE HAGER PUSH/PULL SET 164D/V/B.
4. 1 EA (DOOR #2A) PANIC HARDWARE ADAMS RITE MFG. CO. 8800 SERIES WITH OUTSIDE CYLINDER (FINISH TO MATCH STOREFRONT DOOR)

DOOR #3 – STORAGE DELIVERY

1. 1 EA HINGE 780–112HD 83" ALUM HAGER
2. 1 EA CLOSER 4111 H–CUSH ALUM LCN
3. 1 EA PANIC 9975EO–LD 48" SP28 V.DUPRIN
4. 1 EA TRIM 990DT US26D V.DUPRIN
5. 1 EA ALARM LOCK PG21MSS ALARM
6. 1 EA LOCKGUARD CLP110 US32D DON–JO
7. 1 EA TREADPLATE 24 X 46 UMCO
8. 1 EA WTH/STP160V 48 X 84 N.GUARD
9. 1 EA THRESHOLD 325HD 48" N.GUARD
10. 1 EA SWEEP 101VA 48" N.GUARD
11. 1 EA VIEW FRAME LVGLFMD 9 X 9 DKB W/FLAP ON INSIDE N.GUARD
12. 1 EA MORTISE CYL HOUSING 7PIN SFIC 626
13. 1 EA 7 PIN CONSTRUCTION CORE FOR ABOVE 626
14. 1 EA CONTROL KEY FOR ABOVE

DOOR #3A – FREEZER DELIVERY (DOUBLE DOOR)

1. 2 EA CONTINUOUS HINGE A210HDC 83
2. 1 EA DEADBOLT B661P 626 SCHLAGE
3. 1 EA LATCH PROTECTOR CLP–110 630
4. 1 EA PULL H3E US28 HAGER
5. 1 EA GASKETING 160V 1 x 60" 2 x 84" SMS–TEKS 6 x 3/4"
6. 1 EA DRIP CAP 16 A 64" SMS–TEKS 6 x 3/4"
7. 1 EA TREADPLATE DIA CUT W/ HOLES 24" x 22"
8. 1 EA TREADPLATE DIA CUT W/ HOLES 24" x 34"
9. 2 EA SURFACE BOLT 275D 8" US26D
10. 1 EA THRESHOLD 325 HD 60" N.GAURD
11. 1 EA SWEEP 101VA 24" N.GAURD
12. 1 EA SWEEP 101VA 36" N.GAURD

DOOR #4 – REAR EXIT

1. 1 EA HINGE 780–112HD 83" ALUM HAGER
2. 1 EA CLOSER 4111 H–CUSH ALUM LCN
3. 1 EA PANIC 9975EO–LD 36" SP28 V.DUPRIN
4. 1 EA TRIM 990DT US26D V.DUPRIN
5. 1 EA ALARM LOCK PG21MSS ALARM
6. 1 EA LOCKGUARD CLP110 US32D DON–JO
7. 1 EA TREADPLATE 24 X 34 UMCO
8. 1 EA WTH/STP160V 36 X 84 N.GUARD
9. 1 EA THRESHOLD 325HD 36" N.GUARD
10. 1 EA SWEEP 101VA 36" N.GUARD
11. 1 EA VIEW FRAME LVGLFMD 9 X 9 DKB W/FLAP ON INSIDE N.GUARD
12. 1 EA MORTISE CYL HOUSING 7PIN SFIC 626
13. 1 EA 7 PIN CONSTRUCTION CORE FOR ABOVE 626
14. 1 EA CONTROL KEY FOR ABOVE

DOOR #5 – RESTROOM ENTRY

1. 3 EA HINGE BB1279 4 ½ X 4 ½ US26D HAGER
2. 1 EA CLOSER LDPA4031 SNB ALUM LCN
3. 1 EA PUSH PLATE 30S 4 X 32 US32D 40"AFF MOUNTED TO CENTER OF PLATE
4. 1 EA PULL PLATE LADDER PULL HANDLE WITH DECORATIVE FIXING, 32"L 1"DIA #S–32–1000 – UMCO 32D. 40" AFF MOUNTED CENTER OF PULL
   ALT. OPTION: 1 EA PULLPLATE SANITGRASP
   ALT. OPTION: 1 EA PULL–PUSH BUTTON CYLINDRICAL LOCK – TRILOGY DL2700 US26D CHROME
5. 2 EA KICKPLATE 190S 8 X 34 US32D HAGER
6. 1 EA DOOR STOP 236W US32D HAGER
7. 1 EA FINGER GRD MKIA PUSH SIDE BRN F.SAFE
8. 1 EA FINGER GRD MKIB PULL SIDE BRN F.SAFE
9. 1 EA STEPNPULL PULL SIDE (OPTIONAL)

DOOR #6 – ADA STALL

1. 2 EA HINGE 1250 4 ½ X 4 ½ US26D HAGER
2. 1 EA HINGE BB1279 4 ½ X 4 ½ US26D HAGER
3. 1 EA DEADBOLT B571 X 10–087 214EE X 12 X 291 X 626 SCHLAGE
4. 2 EA BACK TO BACK LADDER PULL HANDLE, 16"L, 1"DIA #S–16–1000 BTB–UMCO 32D MOUNTED 6" FROM EDGE OF DOOR TO CENTER OF SCREWS – 28½" MOUNTED 28⅝" FROM TOP OF DOOR TO C/L OF PULL
5. 1 EA ROBE HOOK 917 BRADLEY
6. 1 EA DOOR STOP 236W US32D HAGER

DOOR #6A – STANDARD STALL

1. 2 EA HINGE 1250 4 ½ X 4 ½ US26D HAGER
2. 1 EA HINGE BB1279 4 ½ X 4 ½ US26D HAGER
3. 1 EA DEADBOLT B571 X 10–087 214EE X 12 X 291 X 626 SCHLAGE
4. 2 EA BACK TO BACK LADDER PULL HANDLE, 16"L, 1"DIA #S–16–1000 BTB–UMCO 32D MOUNTED 6" FROM EDGE OF DOOR TO CENTER OF SCREWS – 28½" MOUNTED 28⅝" FROM TOP OF DOOR TO C/L OF PULL
5. 1 EA ROBE HOOK 917 BRADLEY
6. 1 EA DOOR STOP 236W US32D HAGER

DOOR #7 – DINING ROOM JANITORS CLOSET

1. 3 EA HINGE BB1279 4 ½ X 4 ½ US26D HAGER
2. 1 EA LOCK ND80PD RHO 626 SCHLAGE

DOOR #8 – COMPUTER CLOSET (NOT USED)

DOOR #8A – COMPUTER CLOSET

1. 8 EA HINGE BB1279 4 ½ X 4 ½ US26D HAGER
2. 1 EA LOCK ND80PD RHO 626 SCHLAGE
3. 2 EA FLUSH BOLT 283D US26D HAGER

DOOR #9A & 9B – COOLER

1. ALL DOOR HARDWARE FOR THE REFRIGERATED COOLER / FREEZER SHALL BE PROVIDED BY THE MANUFACTURER.
   MANUFACTURER: KOLPAK @ HY 641 N. McCORKLE PARK ROAD PARSONS, TN 38363 PHONE: 800–344–4675
   HARDWARE PROVIDED:
   1. MAGNETIC PERIMETER DOOR GASKET
   2. THRESHOLD REINFORCED PLASTIC (FRP)
   3. POSI–SEAL DOOR CLOSURE
   4. STATIONARY CHROME DOOR PULL HANDLE
   5. INTERIOR SAFETY RELEASE HANDLE
   6. HINGES – BRUSHED CHROME CAST ALLOY

DOOR #10

1. 1 EA HINGE 780–112HD 83" ALUM HAGER
2. 1 EA CLOSER 1461 RW/PA ALUM LCN
3. 1 EA LOCK ND80PD RHO 626 SCHLAGE
   OPTIONAL – FOR OUTSWING DOOR REPLACE WITH 3A&B:
   3A. 1 EA PANIC 9975EO–LD 36" SP28 V.DUPRIN
   3B. 1 EA TRIM 990DT US26D V.DUPRIN
4. 1 EA ELEC STRIKE 6211 24V DC FSE US32D SCHLAGE
5. 1 EA PWR SUPPLY PS902 SCHLAGE
6. 1 EA ANNUNCIATOR BSV–24P SURFACE MOUNTED
7. 3 EA PUSH BUTTON 621–BK–DA HDP 626 SCHLAGE
8. 1 EA PUSH BUTTON 621–RD–DA HDP 626 SCHLAGE
9. 1 EA HORN WITH STROBE 1910S SCHLAGE
10. 1 EA GLASS 5 X 26 X ¼ UMCO
11. 1 EA VIEW FRAME LFRA100 6 X 27 DKB N.GUARD

DOOR #11 (NOT USED) MANAGERS OFFICE

DOOR #12 (EMERGENCY EXIT ONLY) – PLAYPLACE EMERGENCY EXIT

1. 1 EA CLOSER: LCN 4041 X 18
2. 3 EA HINGES: OFFSET PIVOT SET. GRADE 1 CAST ALUMINUM ALLOY AS SUPPLIED BY DOOR MANUFACTURER.
3. 1 EA PANIC HARDWARE ADAMS RITE MFG. CO. 8800 SERIES (EXIT ONLY) (FINISH TO MATCH STOREFRONT DOOR)
4. 1 EA THRESHOLD NATIONAL GUARD PRODUCTS, INC. SADDLE TYPE THRESHOLD 325, 36" WIDE X 1/2" RISE (ADA ACCESSIBLE)
5. 1 EA WEATHER STRIPPING: PROVIDE COMPRESSION WEATHER STRIPPING AGAINST FIXED STOPS. AT OTHER AGAINST FIXED EDGES PROVIDE SLIDING WEATHER STRIPPING RETAINED IN ADJUSTABLE STRIP MORTISED INTO DOOR EDGE. PROVIDE EPDM OR VINYL GASKET WEATHER STRIPPING IN BOTTOM DOOR RAIL ADJUSTABLE FOR CONTACT W/THRESHOLD
6. 1 EA ALARM DETEX MODEL NO. EAX–500

DOOR #14 (NOT USED) MANAGERS OFFICE

DOOR #15 CO2

1. 1 EA HINGE 780–112HD 83" ALUM HAGER
2. 1 EA LOCK ND80PD RHO 626 SCHLAGE
3. 1 EA LOCK GUARD CLP110 US32D DON JO
4. 1 EA WTH/STP 160V 36 X 84 N.GUARD
5. 1 EA THRESHOLD 425E 36" N.GUARD
6. 1 EA SWEEP 101VA 36" N.GUARD
7. 1 EA SEC. LOUVER LVRSG–3 DKB 18 X 18 N.GUARD

DOOR #16 CREW ROOM

1. 3 EA HINGE BB1279 4 ½ X 4 ½ US26D HAGER
2. 1 EA ND60PD RHO VESTIBULE LEVER LOCK SCHLAGE

DOOR #17 – DUMPSTER

1. 1 EA HINGE780–112HD 83" ALUM HAGER
2. 1 EA DEADBOLT B661P 626 SCHLAGE
3. 1 EA PULL H3E US28 HAGER
4. 1 EA LOCKGUARD CLP110 US32D DON–JO
5. 1 EA TREADPLATE 24 X 46 UMCO
6. 1 EA WTH/STP 160V 48 X 84 N.GUARD
7. 1 EA THRESHOLD 325HD 48" N.GUARD
8. 1 EA SWEEP 101VA 48" N.GUARD
9. 1 EA SEC. LOUVER LVRSG–3 DKB 12 X 12 N.GUARD

DOOR SCHEDULE

MARK	DOOR MATERIAL	DOOR SIZE	TYPE	FRAME MATL	FRAME SIZE
1	ALUM.	3'–0"x7'–0"x1 3/4"	A	ALUM.	(NOTE 5)
2	ALUM.	3'–0"x7'–0"x1 3/4"	A1	ALUM.	(NOTE 5)
2A	ALUM.	3'–0"x7'–0"x1 3/4"	A1	ALUM.	(NOTE 5)
3	H.M.	4'–0"x7'–0"x1 3/4"	B	H.M.	2"JAMB 4"HD
3A	H.M. (DOUBLE DOOR)	5'–0"x7'–0"x1 3/4"	G	H.M.	2"JAMB 4"HD
4	H.M.	3'–0"x7'–0"x1 3/4"	B	H.M.	2"JAMB 4"HD
5	S.C. WOOD W/ LAM.	3'–0"x6'–8"x1 3/4"	C	H.M.	2"JAMB & HEAD
6	S.C. WOOD W/ LAM.	3'–0"x4'–8"x1 3/4"	D	H.M.	2"JAMB & HEAD
6A	S.C. WOOD W/ LAM.	2'–6"x4'–8"x1 3/4"	D	H.M.	2"JAMB & HEAD
7	S.C. WOOD W/ LAM.	3'–0"x6'–8"x1 3/4"	C	H.M.	2"JAMB & HEAD
8		NOT USED			
8A	S.C. WOOD W/ LAM.	(2) 1'–2"x8'–0"x1 3/4"	E	H.M.	2"JAMB & HEAD
9A	INSULATED METAL	3'–0"x6'–6"x4"	C	N/A	N/A
9B	INSULATED METAL	4'–0"x6'–6"x4"	C	N/A	N/A
10	H.M.	3'–0"x7'–0"x1 3/4"	F	H.M.	2"JAMB & HEAD
11		NOT USED			
12	ALUM.	3'–0"x7'–0"x1 3/4"	A	ALUM.	(NOTE 5)
13		NOT USED			
14		NOT USED			
15	H.M.	3'–0"x7'–0"x1 3/4"	C	H.M.	2"JAMB 4"HD
16	S.C. WOOD W/ LAM.	3'–0"x7'–0"x1 3/4"	C	H.M.	2"JAMB & HEAD
17	H.M.	4'–0"x7'–0"x1 3/4"	C	H.M.	2"JAMB 4"HD

GENERAL DOOR NOTES:

1. GC TO INSTALL ACCESSIBILITY DOOR SIGNS WHERE REQ'D BY LOCAL CODES – SEE GENERAL NOTE 6, SHEET A1.0
2. ALARM CONTACT SWITCHES SHALL BE RECESSED INTO THE TOP OF THE DOOR & HOLLOW METAL FRAME ABOVE.
3. DOORS, DOOR FRAMES, & HARDWARE FOR DOORS 3, 3A, 4, 5, 6, 6A, 7, 8, 8A, 10, 11, 12, 14, 15, 16 SUPPLIED BY: UNIVERSAL MANUFACTURING 1–800–821–1414.
4. DOOR 9A & 9B SUPPLIED BY FREEZER/COOLER MANUFACTURER
5. SEE ELEVATIONS AND WALL SECTIONS
6. ALL INTERIOR SOLID CORE WOOD DOORS TO HAVE A LAMINATED FINISH.
7. DOOR 8, 8A & 16– 1" UNDERCUT FOR MAKE UP AIR. DOOR 16. LAMINATED FINISH – "WILSONART DOVE GREY" D92–60
8. DOOR 3, 3A, 4, 15, & 17 TO HAVE MAXIMUM U VALUE = 0.61
9. DOOR 5 RESTROOM EXTERIOR, 7 – LAMINATED FINISH, PER DECOR PORTFOLIO:
   GEOMETRY – "LAMITECH 2315 MT DARKSTEEL"
   FRAME FINISH – BENJAMIN MOORE "GRAY 2121–10"
   LUNA – "LAMITECH 1467 MT LINEAL OAK"
   FRAME FINISH – BENJAMIN MOORE "GRAY 2121–10"
   ROUTE 66 – "WILSONART NORTH SEA D90–60"
   FRAME FINISH – BENJAMIN MOORE "WHALE GRAY 2134–40"
   RAY – "LAMITECH 2255 MT IRON"
   FRAME FINISH – BENJAMIN MOORE "MIDNIGHT OIL 1631"
10. DOOR 5 RESTROOM INTERIOR, 6, 6A – LAMINATED FINISH – "LAMITECH ONTARIO OAK 1540 PW"
    FRAME FINISH BENJAMIN MOORE "GRAY 2121–10"

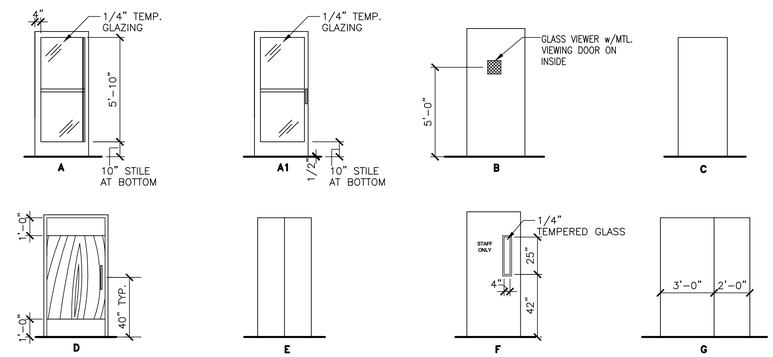

DOOR TYPES

PREPARED FOR: McDonald's USA, LLC
© 2025 McDonald's USA, LLC
Thesp drawings and specifications are the confidential and proprietary property of McDonald's USA, LLC and shall not be copied or reproduced without written authorization. The contract documents were prepared for use on this specific site in connection with its issue date, and are not to be used for any other purpose or project. Reproductions of these drawings for reference or example on another project requires the services of properly licensed architects and engineers. Reproductions of the standard details for use on another project is not authorized.

REV	DATE	DESCRIPTION	BY
1	04/08/2025	COUNTY COMMENTS, M-O OC COMMENTS, & UTILITY COORDINATION	
2	05/09/2025	PLAYPLACE ADDITION	

REGISTERED ARCHITECT JEREMY WILLIAMS 31926 STATE OF TEXAS

PREPARED BY:
JAW Architects, Inc.
Jeremy Williams, Architect
Phone: 817-705-3387
Email: jeremy@jaw-arch.com

DRAWN BY: JAW
STD ISSUE DATE: 2024
REVIEWED BY: JAW
DATE ISSUED: 10/11/2024

TITLE: 2024 STANDARD BUILDING – BB20
4584–WOOD/WOOD

DESCRIPTION	
WOOD BEARING WALLS WITH HARDIE SIDING	
WOOD ROOF TRUSS FRAMING	
EIFS/BATTEN/METAL/HARDIE SIDING EXTERIOR FINISHES	
SITE ID	SITE ADDRESS
042–3591	NWC OF FM 460 & FM 740, FORNEY TEXAS

JAWA 24–0151

SHEET NO. A6.0
DOOR & HARDWARE

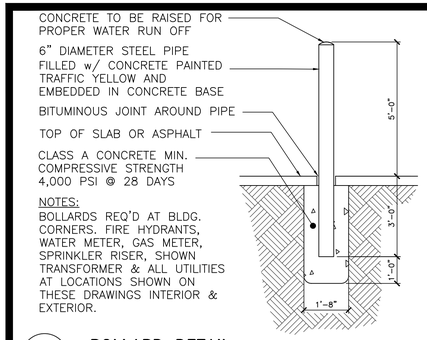

1 A6.1 **BOLLARD DETAIL**
N.T.S.

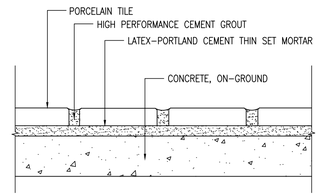

2 A6.1 **RESTROOM AND DINING ROOM FLOORS OVER CONCRETE**
N.T.S.

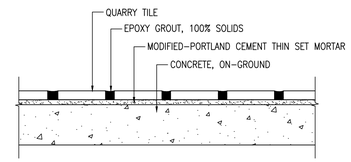

3 A6.1 **KITCHEN/SUPPORT FLOORS OVER CONCRETE**
N.T.S.

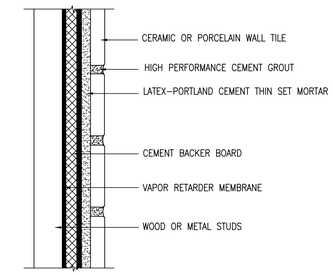

4 A6.1 **DINING ROOM INTERIOR WALLS OVER WOOD OR METAL STUDS**
N.T.S.

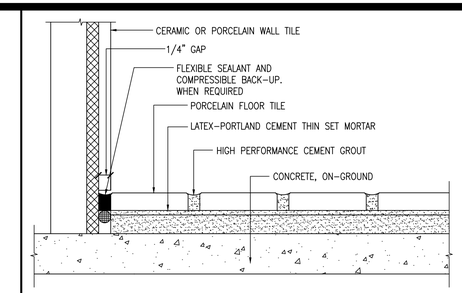

5 A6.1 **DINING ROOM PERIMETER JOINT**
N.T.S.

WALL TILE SCHEDULE – LUNA

MARK	ROOM NAME	WALL		MORTAR SETTING BED	GROUT
100	CUSTOMER SERVICE	CERAMIC OR PORCELAIN WALL TILE	(NOTE 5C)	LATEX–PORTLAND CEMENT THIN SET (MEDIUM BED)	HIGH PERFORMANCE CEMENT GROUT
101	DINING	SEE DINING ROOM FINISH SCHEDULE	(NOTE 5B & 5C)	LATEX–PORTLAND CEMENT THIN SET (MEDIUM BED)	HIGH PERFORMANCE CEMENT GROUT
102	WOMEN'S TOILET	CERAMIC OR PORCELAIN WALL TILE	(NOTE 4)	LATEX–PORTLAND CEMENT THIN SET (MEDIUM BED)	HIGH PERFORMANCE CEMENT GROUT (NOTE 4)
103	MEN'S TOILET	CERAMIC OR PORCELAIN WALL TILE	(NOTE 4)	LATEX–PORTLAND CEMENT THIN SET (MEDIUM BED)	HIGH PERFORMANCE CEMENT GROUT (NOTE 4)
104	SUPPORT	N/A – SEE ROOM FINISH SCHEDULE		----	----
105	KITCHEN	N/A – SEE ROOM FINISH SCHEDULE		----	----
106	PRESENTER–1	CERAMIC WALL TILE		LATEX–PORTLAND CEMENT THIN SET (MEDIUM BED)	HIGH PERFORMANCE CEMENT GROUT
107	ORDER	N/A – SEE ROOM FINISH SCHEDULE		----	----
108	MANAGER'S OFFICE	N/A – SEE ROOM FINISH SCHEDULE		----	----
109	CREW ROOM	SEE ROOM FINISH SCHEDULE	(NOTE 5B)	LATEX–PORTLAND CEMENT THIN SET (MEDIUM BED)	HIGH PERFORMANCE CEMENT GROUT
110	COOLER	N/A – SEE ROOM FINISH SCHEDULE		----	----
111	FREEZER	N/A – SEE ROOM FINISH SCHEDULE		----	----
112	COMPUTER CLOSET	N/A – SEE ROOM FINISH SCHEDULE		----	----
113	CREW ALCOVE	N/A – SEE ROOM FINISH SCHEDULE		----	----
114	JANITOR'S CLOSET	N/A – SEE ROOM FINISH SCHEDULE		----	----
115	VESTIBULE	CERAMIC WALL TILE		LATEX–PORTLAND CEMENT THIN SET (MEDIUM BED)	HIGH PERFORMANCE CEMENT GROUT
116	PRESENTER–2	CERAMIC WALL TILE		LATEX–PORTLAND CEMENT THIN SET (MEDIUM BED)	HIGH PERFORMANCE CEMENT GROUT
117	CO2	N/A – SEE ROOM FINISH SCHEDULE		----	----
118	PLAYPLACE VESTIBULE	CERAMIC WALL TILE		LATEX–PORTLAND CEMENT THIN SET (MEDIUM BED)	HIGH PERFORMANCE CEMENT GROUT
119	PLAYPLACE DINING	SEE DINING ROOM FINISH SCHEDULE	(NOTE 5B & 5C)	LATEX–PORTLAND CEMENT THIN SET (MEDIUM BED)	HIGH PERFORMANCE CEMENT GROUT
120	PLAYPLACE TOY AREA	SEE DINING ROOM FINISH SCHEDULE	(NOTE 5B & 5C)	LATEX–PORTLAND CEMENT THIN SET (MEDIUM BED)	HIGH PERFORMANCE CEMENT GROUT

FLOOR TILE SCHEDULE – LUNA

MARK	ROOM NAME	FLOOR	BASE	MORTAR SETTING BED	GROUT
100	CUSTOMER SERVICE	PORCELAIN FLOOR TILE (NOTE 3)	NONE – WALL TILE	LATEX–PORTLAND CEMENT THIN SET (MEDIUM BED)	HIGH PERFORMANCE CEMENT GROUT
101	DINING	PORCELAIN FLOOR TILE (NOTE 3)	NONE – WALL TILE	LATEX–PORTLAND CEMENT THIN SET (MEDIUM BED)	HIGH PERFORMANCE CEMENT GROUT
102	WOMEN'S TOILET	PORCELAIN FLOOR TILE (NOTE 4)	NONE – WALL TILE (NOTE 5A)	LATEX–PORTLAND CEMENT THIN SET (MEDIUM BED)	HIGH PERFORMANCE CEMENT GROUT
103	MEN'S TOILET	PORCELAIN FLOOR TILE (NOTE 4)	NONE – WALL TILE (NOTE 5A)	LATEX–PORTLAND CEMENT THIN SET (MEDIUM BED)	HIGH PERFORMANCE CEMENT GROUT
104	SUPPORT	QUARRY TILE (NOTE 2)	COVED QUARRY TILE	MODIFIED–PORTLAND CEMENT THIN SET MORTAR (MEDIUM BED)	CHEMICAL RESISTANT, WATER–CLEANABLE, TILE–SETTING EPOXY – 100% SOLIDS, INDUSTRIAL–GRADE
105	KITCHEN	QUARRY TILE (NOTE 2)	COVED QUARRY TILE	MODIFIED–PORTLAND CEMENT THIN SET MORTAR (MEDIUM BED)	CHEMICAL RESISTANT, WATER–CLEANABLE, TILE–SETTING EPOXY – 100% SOLIDS, INDUSTRIAL–GRADE
106	PRESENTER–1	QUARRY TILE (NOTE 2)	COVED QUARRY TILE	MODIFIED–PORTLAND CEMENT THIN SET MORTAR (MEDIUM BED)	CHEMICAL RESISTANT, WATER–CLEANABLE, TILE–SETTING EPOXY – 100% SOLIDS, INDUSTRIAL–GRADE
107	ORDER	QUARRY TILE (NOTE 2)	COVED QUARRY TILE	MODIFIED–PORTLAND CEMENT THIN SET MORTAR (MEDIUM BED)	CHEMICAL RESISTANT, WATER–CLEANABLE, TILE–SETTING EPOXY – 100% SOLIDS, INDUSTRIAL–GRADE
108	MANAGER'S OFFICE	QUARRY TILE (NOTE 2)	COVED QUARRY TILE	MODIFIED–PORTLAND CEMENT THIN SET MORTAR (MEDIUM BED)	CHEMICAL RESISTANT, WATER–CLEANABLE, TILE–SETTING EPOXY – 100% SOLIDS, INDUSTRIAL–GRADE
109	CREW ROOM	QUARRY TILE (NOTE 2)	COVED QUARRY TILE	MODIFIED–PORTLAND CEMENT THIN SET MORTAR (MEDIUM BED)	CHEMICAL RESISTANT, WATER–CLEANABLE, TILE–SETTING EPOXY – 100% SOLIDS, INDUSTRIAL–GRADE
110	COOLER	QUARRY TILE (NOTE 2)	4" ALUM. COVED BASE	MODIFIED–PORTLAND CEMENT THIN SET MORTAR (MEDIUM BED)	CHEMICAL RESISTANT, WATER–CLEANABLE, TILE–SETTING EPOXY – 100% SOLIDS, INDUSTRIAL–GRADE
111	FREEZER	QUARRY TILE (NOTE 2)	4" ALUM. COVED BASE	MODIFIED–PORTLAND CEMENT THIN SET MORTAR (MEDIUM BED)	CHEMICAL RESISTANT, WATER–CLEANABLE, TILE–SETTING EPOXY – 100% SOLIDS, INDUSTRIAL–GRADE
112	COMPUTER CLOSET	QUARRY TILE (NOTE 2)	COVED QUARRY TILE	MODIFIED–PORTLAND CEMENT THIN SET MORTAR (MEDIUM BED)	CHEMICAL RESISTANT, WATER–CLEANABLE, TILE–SETTING EPOXY – 100% SOLIDS, INDUSTRIAL–GRADE
113	CREW ALCOVE	QUARRY TILE (NOTE 2)	COVED QUARRY TILE	MODIFIED–PORTLAND CEMENT THIN SET MORTAR (MEDIUM BED)	CHEMICAL RESISTANT, WATER–CLEANABLE, TILE–SETTING EPOXY – 100% SOLIDS, INDUSTRIAL–GRADE
114	JANITOR'S CLOSET	PORCELAIN FLOOR TILE	COVED QUARRY TILE	LATEX–PORTLAND CEMENT THIN SET (MEDIUM BED)	HIGH PERFORMANCE CEMENT GROUT
115	VESTIBULE	PORCELAIN FLOOR TILE	NONE – WALL TILE	LATEX–PORTLAND CEMENT THIN SET (MEDIUM BED)	HIGH PERFORMANCE CEMENT GROUT
116	PRESENTER–2	QUARRY TILE (NOTE 2)	COVED QUARRY TILE	MODIFIED–PORTLAND CEMENT THIN SET MORTAR (MEDIUM BED)	CHEMICAL RESISTANT, WATER–CLEANABLE, TILE–SETTING EPOXY – 100% SOLIDS, INDUSTRIAL–GRADE
117	CO2	N/A – SEE ROOM FINISH SCHEDULE		----	----
118	PLAYPLACE VESTIBULE	PORCELAIN FLOOR TILE	NONE – WALL TILE	LATEX–PORTLAND CEMENT THIN SET (MEDIUM BED)	HIGH PERFORMANCE CEMENT GROUT
119	PLAYPLACE DINING	PORCELAIN FLOOR TILE (NOTE 3)	NONE – WALL TILE	LATEX–PORTLAND CEMENT THIN SET (MEDIUM BED)	HIGH PERFORMANCE CEMENT GROUT
120	PLAYPLACE TOY AREA	PORCELAIN FLOOR TILE (NOTE 3)	NONE – WALL TILE	LATEX–PORTLAND CEMENT THIN SET (MEDIUM BED)	HIGH PERFORMANCE CEMENT GROUT

ROOM FINISH SCHEDULE – LUNA

MARK	ROOM NAME	WALLS			CEILING *	REMARKS
		SUBSTRATE	FINISH			
100	CUSTOMER SERVICE	CEMENT BOARD	TILE **	TILE AS NOTED ON A1.1 AND A3.1	2'x2' VINYL–FACED LAY–IN	
101	DINING	CEM BD/GYP BD	TILE/V.W.C. **	SEE DINING ROOM FINISH SCHEDULE	SEE DINING ROOM FINISH SCHEDULE	
102	WOMEN'S TOILET	CEMENT BOARD	TILE		PAINTED GYP. BD.	BENJAMIN MOORE – "OC–17 WHITE DOVE"
103	MEN'S TOILET	CEMENT BOARD	TILE		PAINTED GYP. BD.	BENJAMIN MOORE – "OC–17 WHITE DOVE"
104	SUPPORT	CEMENT BOARD	TILE	STAINLESS STEEL CORNERS	2'x2' VINYL–FACED LAY–IN	SEE NOTE 5 FOR WALL FINISH EXCEPTIONS
105	KITCHEN	CEMENT BOARD	TILE	STAINLESS STEEL CORNERS, TILE OVER CEM BD AS NOTED ON A1.1	2'x2' VINYL–FACED LAY–IN	SEE SHEET A1.1 FOR EXTENT OF CEMENT BOARD, SS OR CT
106	PRESENTER –1	CEMENT BOARD	TILE	TILE AS NOTED ON A1.1	2'x2' VINYL–FACED LAY–IN	
107	ORDER	CEMENT BOARD	TILE		2'x2' VINYL–FACED LAY–IN	
108	MANAGER'S AREA	CEMENT BOARD	TILE		2'x2' VINYL–FACED LAY–IN	
109	CREW ROOM	CEM BD/GYP BD	TILE/V.W.C. **	SEE NOTE 8	2'x2' ACOUST. LAY–IN	
110	COOLER	N/A	PRE–FAB METAL SKIN PANEL		PRE–FAB METAL SKIN PANEL	BASE SUPPLIED BY KES
111	FREEZER	N/A	PRE–FAB METAL SKIN PANEL		PRE–FAB METAL SKIN PANEL	BASE SUPPLIED BY KES
112	COMPUTER CLOSET	CEMENT BOARD	TILE		PAINTED GYP. BD.	
113	CREW ALCOVE	CEMENT BOARD	TILE	STAINLESS STEEL CORNERS, TILE OVER CEM BD AS NOTED ON A1.1	2'x2' VINYL–FACED LAY–IN	SEE SHEET A1.1 FOR EXTENT OF CEMENT BOARD, SS OR CT
114	JANITOR'S CLOSET	CEMENT BOARD	TILE		PAINTED GYP. BD.	EXT GRADE PLYWOOD (NOTE 4) SEE NOTE 5A
115	VESTIBULE	CEM BD/GYP BD	TILE/V.W.C.	SEE DINING ROOM FINISH SCHEDULE	SEE DINING ROOM FINISH SCHEDULE	OPTIONAL PEDIMAT. SEE DETAIL 7/A6.1. VERIFY WITH MCD CONSTRUCTION MANGER
116	PRESENTER –2	CEMENT BOARD	TILE	TILE AS NOTED ON A1.1	2'x2' VINYL–FACED LAY–IN	
117	CO2	CEMENT BOARD	TILE		PAINTED GYP. BD.	EXT GRADE PLYWOOD (NOTE 4) SEE NOTE 5
118	PLAYPLACE VESTIBULE	CEM BD/GYP BD	TILE/V.W.C.	SEE DINING ROOM FINISH SCHEDULE	SEE DINING ROOM FINISH SCHEDULE	OPTIONAL PEDIMAT. SEE DETAIL 7/A6.1. VERIFY WITH MCD CONSTRUCTION MANGER
119	PLAYPLACE DINING	CEM BD/GYP BD	TILE/V.W.C.	SEE DINING ROOM FINISH SCHEDULE	SEE DINING ROOM FINISH SCHEDULE	
120	PLAYPLACE TOY AREA	CEM BD/GYP BD	TILE/V.W.C.	SEE DINING ROOM FINISH SCHEDULE	SEE DINING ROOM FINISH SCHEDULE	

DINING ROOM FINISH SCHEDULE – LUNA

MARK	QUANTITY	TYPE	PRODUCT, FINISH & COLOR	REMARKS
	N/A	WALL/WAINSCOT TILE	CROSSVILLE – MOONLIGHT GREY 8"x24"	GROUT: MAPEI ULTRACOLOR GRAY 09 – JOINT 1/16" MAX
D2	N/A	WALL PANELING	LAMITECH – 1467 MT LINEAL OAK 48"x120"	
D3	N/A	WALL PANELING	MDF WITH ROUTED V–GROOVE, LAQUERED TO MATCH RAL 9010, 3/4"x47.5"X96"	
D4	N/A	WALLCOVERING	KOROSEAL WALLCOVERING – 7421–30 CIPRIANI FOUNTAIN HEAD	
D5	N/A	WALLCOVERING	ASA WALLCOVERING – NAT–GREEN	
D6	N/A	SERVICE AREA TRIM	SCHLUTER – QUADEC – TUSCAN PEWTER Q80TSG	
D7	N/A	MAIN DINING TRIM	SCHLUTER – QUADEC – SATIN ANODIZED ALUMINUM	
D8	N/A	LAMINATE BASE	LAMITECH – 2255 MT IRON, COMPACT	
D9	N/A	WINDOW SILLS AND CASEMENT	DUPONT –CORIAN "DEEP CLOUD"	
D10	N/A	MAIN CEILING TILE	ACOUSTICAL SURFACES INC. – WOOD WOOL "5/8"x24"x48" DROP IN CEILING W/ SQUARE EDGES	FACTORY PAINTED: BENJAMIN MOORE – GALVESTON GRAY AC–27
D11	N/A	MAIN CEILING GRID	USG – DX/DXL INTERMEDIATE DUTY GRID	CUSTOM PAINTED: BENJAMIN MOORE – GALVESTON GRAY AC–27
D12	N/A	CEILING VENT PAINT	BENJAMIN MOORE – GALVESTON GRAY AC–27	
D13	1	PARTITION W/ HALF WALL	TEXTURED GREY POWDERCOAT ROUND MESH AND FRAME, WALL FINISH – LAMITECH – 1467 MT LINEAL OAK	TRIM FINISH: SIGNAL YELLOW SEMI–GLOSS POWDERCOAT
D14	1	FRIES WALL GRAPHIC	SET OF 4	LIGHTING BY PERSONA
D15	4	LUNA WINDOW SHUTTER	TEXTURED GREY POWDERCOAT ROUND MESH AND FRAME	
D16	SEE PLAN	COVE LIGHTING	SECURITY LIGHTING – FLEXIBLE TAPE LIGHT	SEE ELECTRICAL
D17	SEE PLAN	PENDANT LIGHTING	SECURITY LIGHTING – ORBIT PENDANT LIGHT	SEE ELECTRICAL
D18				
D19				
D20				

GENERAL FINISH NOTES:

1. REFERENCE: McDONALD'S PROJECT MANUAL – SECTION 093000
2. KITCHEN FLOOR TILE:
   TILE: CROSSVILLE 6"x6" 'METROPOLITAN QUARRY BASICS ABRASIVE'
   GROUT: CHARCOAL #47 BY MAPEI
   KERAPOXY IEG BLACK #10 BY MAPEI (FOR OPTIONAL GREY TILE)
   COLOR: PURITAN GRAY EXTRA ABRASIVE 57XA (STANDARD)
   MAYFLOWER RED 31XA (OPTIONAL) – VERIFY W/ MCDONALD'S ACM
3. DINING ROOM FLOOR TILE:
   TILE: CROSSVILLE 24"x24" 'MOONLIGHT GREY'
   GROUT: MAPEI ULTRACOLOR GRAY 09 – JOINT 1/8" MAX.
4. RESTROOM TILE:
   MAIN WALL TILE: ICG ITALIA – ARCHITECT 12"x24" 'FACTORY'
   ACCENT WALL TILE: ICG ITALIA – SHELTER 4"x12" 'BIANCO MATTE'
   RESTROOM SINK & HAND DRYER PANEL: CORIAN – CAMEO WHITE
   FLOOR TILE: ICG ITALIA – NEW GROUND 12"x24" 'ANTHRACITE'
   GROUT: MAPEI ULTRACOLOR CHARCOAL 47 – JOINT 1/8" MAX
5. TILE TRANSITION AND EDGE PROTECTION:
   A) TILE BASE (RESTROOM ONLY): SCHLUTER DILEX–AHK SERIES, BRUSHED STAINLESS STEEL.
   B) TILE EDGE PROTECTION (WALL TRANSITION): SCHLUTER–RONDEC–DB, SATIN ANODIZED ALUMINUM.
   C) TILE CORNER PROTECTION (OUTSIDE CORNER): SCHLUTER–RONDEC–AE, SATIN ANODIZED ALUMINUM.

   BEFORE FINAL INSPECTION, REMOVE PROTECTIVE COVERINGS AND PERFORM FINAL CLEANING.
6. TILE CLEANER: DETERDEK, BY FILA SURFACE CARE PRODUCTS – NO SUBSTITUTIONS ALLOWED
   CAN BE ORDERED BY ICG ITALIA, CROSSVILLE, OR DIRECT FROM MANUFACTURER: FILA/DETEREK
   POST INSTALLATION CLEANING REQUIRED ON ALL FLOOR TILE INSTALLTIONS PRIOR TO RESTAURANT TURN OVER.

   APPLY CLEANER PER MANUFACTURER'S WRITTEN INSTRUCTIONS.
   REFERENCE: McDONDALD'S PROJECT MANUAL – SECTION 09300 TILING INTERIOR.
7. GROUT COLOR AND MANUFACTURER AS INDICATED ON SHEET A1.1 AND INTERIOR DECOR DRAWINGS.

GENERAL FINISH NOTES:

1. ALL FINISH SURFACES OF WALL AND CEILING MATERIALS SHALL BE CLASS B AND SHALL HAVE A FLAME SPREAD RATING OF 26 TO 75 AND A SMOKE DENSITY OF 450 MAX. (PER IBC TABLE 803.13).
2. DECORATIVE MATERIALS SHALL BE FLAME RETARDANT AND MEET THE CRITERIA OF NFPA 701.
3. DECORATIVE MATERIAL SHALL NOT CONCEAL EXITS, EXIT LIGHTS, ALARM STATIONS, HOSE CABINETS, AND EXTINGUISHER LOCATIONS
4. WHEN BUILDING TYPE IS A NON–COMBUSTIBLE CATEGORY, ALL PLYWOOD SHALL BE FIRE RETARDANT TREATED.
5. A. TILE WAINSCOT TO 6' A.F.F. OVER CEMENT BD. OVER EXT GRADE PLYWOOD (NOTE 4) AT MOP SINKS
6. PROVIDE CEMENT BOARD BACKER OR EQUIVALENT AT ALL TILE LOCATIONS.
7. PROVIDE VAPOR BARRIER BEHIND PLYWOOD AT WALLS AND BEHIND GYP. AT CEILING
8. CREW ROOM FINISHES:
   NORTH WALL: MOMENTUM WALL GRAPHIC – VIS703.
   EAST/WEST/SOUTH WALLS: TILE WAINSCOT TO 3' A.F.F. – ICG ITALIA ARCHITECT FACTORY 12"x24". TILE COVE BASE – ICG ITALIA ARCHITECT FACTORY 6"x12". LUNA WOOD WALL COVERING – MOMENTUM NA–5C–MC439 – ENGLEWOOD,ELM.
   CEILING: USG – FROST CLIMAPLUS 534 CHARCOAL 24"x24". PAINT GRID TO MATCH TILE.

   *TILE OPTION FOR HEALTH CODE: WAINSCOT – ICG ITALIA MA.DE UNI GRIGIO 12"x24". TILE COVE BASE – ICG ITALIA UNI GRIGIO 6"x12".
9. ALL DECOR ELEMENTS MANUFACTURED BY DECOR TO BE PURCHASED AND INSTALLED BY GC, UNO.

* SEE CEILING PLAN FOR HEIGHTS & LAYOUTS
** VWC ON EXTERIOR WALL ASSEMBLIES TO BE PERFORATED

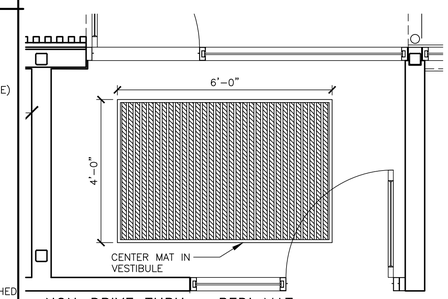

NON–DRIVE THRU – PEDI MAT

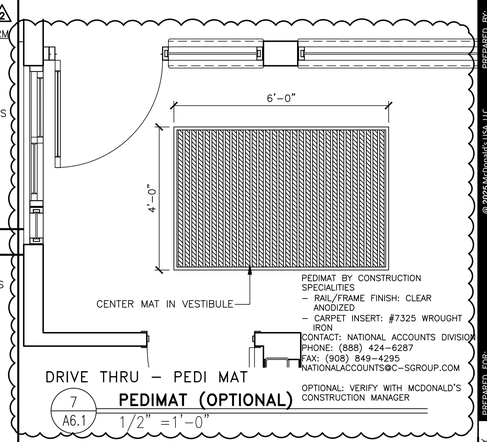

DRIVE THRU – PEDI MAT
7 A6.1 **PEDIMAT (OPTIONAL)** 1/2" =1'-0"

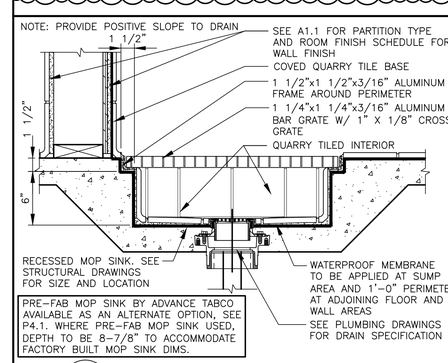

PRE–FAB MOP SINK BY ADVANCE TABCO AVAILABLE AS AN ALTERNATE OPTION, SEE P4.1. WHERE PRE–FAB MOP SINK USED, DEPTH TO BE 8–7/8" TO ACCOMMODATE FACTORY BUILT MOP SINK DIMS.

8 A6.1 **MOP SINK** 1 1/2"=1'-0"

REV	DATE	DESCRIPTION	BY
1	04/08/2025	COUNTY COMMENTS, M/O OC COMMENTS, & UTILITY COORDINATION	
2	05/09/2025	PLAYPLACE ADDITION	

PREPARED BY:
JAW Architects, Inc.
Jeremy Williams, Architect
Phone: 817.705.3387
Email: jeremy@jaw-arch.com

REGISTERED ARCHITECT JEREMY WILLIAMS 17926 STATE OF TEXAS

PREPARED FOR:
McDonald's USA, LLC

© 2025 McDonald's USA, LLC
These drawings and specifications are the confidential and proprietary property of McDonald's USA, LLC and shall not be reproduced without written authorization. The contract documents were prepared for use on this specific site in conjunction with its issue date and are not to be used for any other project. The reproduction of these drawings for reference or example on another project requires the services of properly licensed architects and engineers. Reproduction of the contract documents for other projects or reuse on another project is not authorized.

DRAWN BY: JAW
STD ISSUE DATE: 2024
REVIEWED BY: JAW
DATE ISSUED: 10/11/2024

TITLE: 2024 STANDARD BUILDING – BB20
4584–WOOD/WOOD
DESCRIPTION: WOOD BEARING WALLS WITH HARDIE SIDING
WOOD ROOF TRUSS FRAMING
EIFS/BATTEN/METAL/HARDIE SIDING EXTERIOR FINISHES
SITE ID: 042–3591
SITE ADDRESS: NWC OF FM 460 & FM 740, FORNEY TEXAS

JAWA 24–0151

SHEET NO. **A6.1**
FINISH SCHEDULES

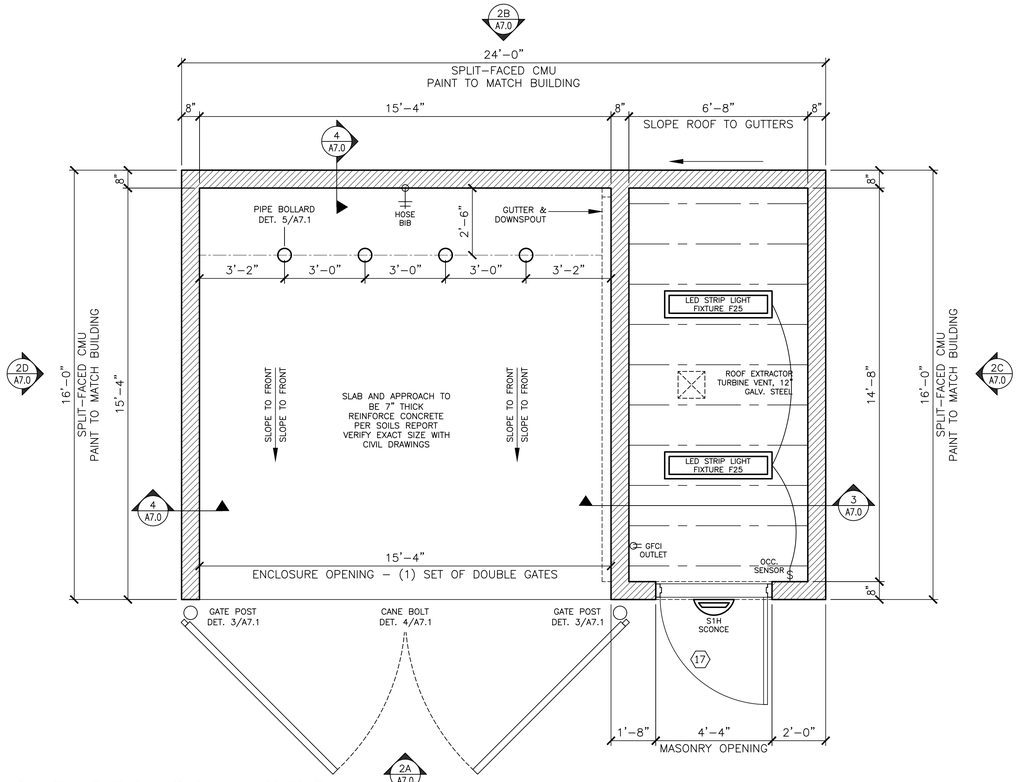

1 STORAGE BUILDING PLAN SCALE 3/8"=1'-0"

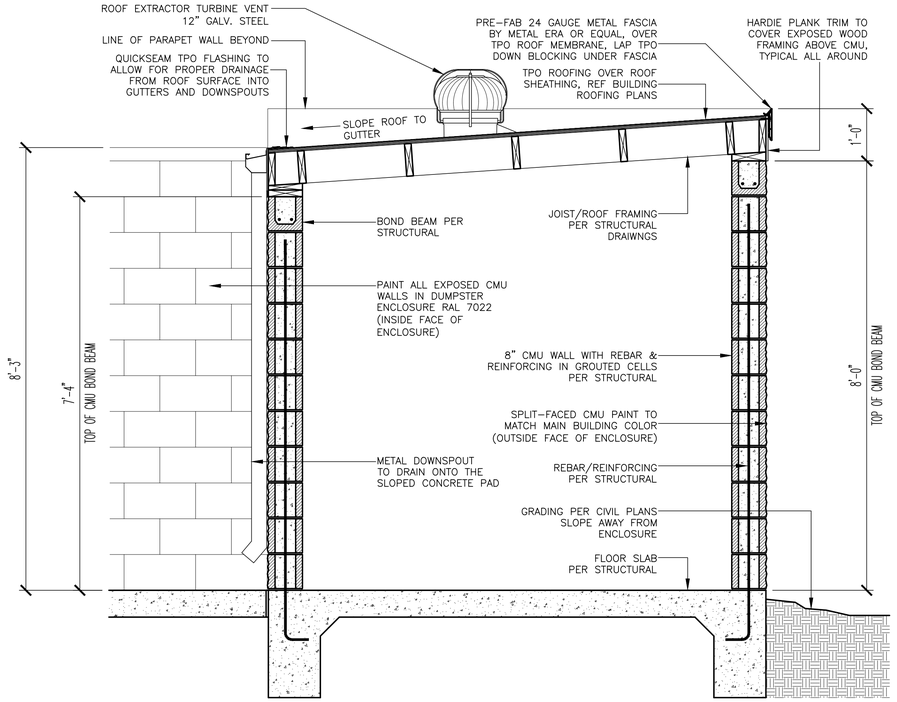

3 WALL SECTION DETAIL SCALE 3/4"=1'-0"

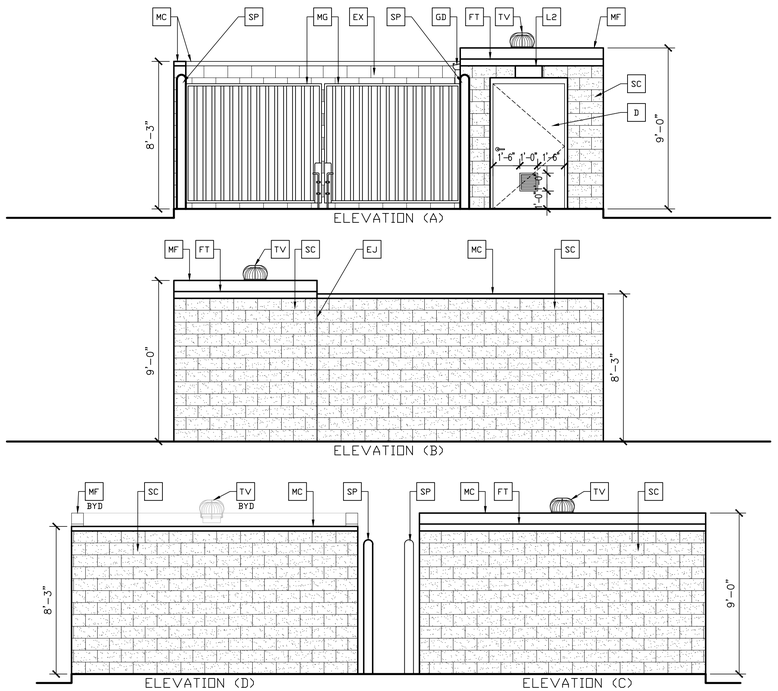

2 DUMPSTER ENCLOSURE PLAN SCALE 1/4"=1'-0"

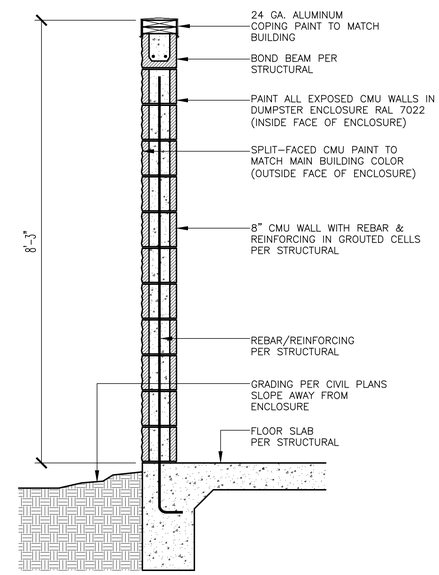

4 WALL SECTION DETAIL SCALE 3/4"=1'-0"

KEY NOTES:

- D — HOLLOW METAL DOOR PAINT: "GAUNTLET GREY" SW7019 BY SHERWIN WILLIAMS
- EJ — TYPICAL CMU EXPANSION JOINT WITH BACKER ROD AND SEALANT
- EX — GC TO PAINT EXPOSED CMU BLOCK RAL 7022 (INSIDE FACE OF ENCLOSURE)
- FT — FIBER CEMENT FASCIA BOARD: PAINT: "GAUNTLET GREY" SW7019 BY SHERWIN WILLIAMS
- GD — METAL GUTTERS AND DOWNSPOUT DRAIN ONTO DUMPSTER ENCLOSURE SLAB (PAINT RAL 7022)
- L2 — RADIAL SCONCE LIGHT FIXTURE – SEE ELECTRICAL COLOR: PLATINUM SILVER
- MC — 24 GAUGE ALUMINUM COPING OVER CMU ENCLOSURE WALLS COLOR TO MATCH RAL 7022
- MF — METAL FASCIA – PRE-FAB ANCHOR-TITE FASCIA COLOR TO MATCH RAL 7022
- MG — METAL DUMPSTER ENCLOSURE ENTRY GATES, REF DETAILS AND NOTES (COLOR TO MATCH RAL 7022)
- SC — SPLIT-FACED CMU PAINT TO MATCH "GAUNTLET GREY" SW7019 BY SHERWIN WILLIAMS (OUTSIDE FACE OF ENCLOSURE)
- SP — STEEL CONCRETE FILLED POST PAINT TO MATCH RAL 7022
- TV — ROOF EXTRACTOR TURBINE VENT 12" GALV. STEEL

GENERAL NOTES:

GENERAL CONTRACTOR TO PROVIDE 6 INCHES OF EXPOSED GRADE BREAMS AROUND THE STORAGE BUILDING WITH THE EXCEPTION OF THE DOOR LOCATION, COORDINATE WITH THE CIVIL GRADING PLANS.

5/8" PUDDLE WELD B/N DECK & ALL ANGLE TYPICAL IN EACH DECK FLUTE, PROVIDE #12 SCREWS @ 6" O.C. AT ALL DECK S SIDE LAPS.

GENERAL CONTRACTOR TO SUPPLY AND INSTALL CORRUGATED METAL GATES (16 GAUGE) F-DECKING, ALL METAL TO BE PRIMED AND PAINTED TO MATCH THE BUILDING TRIM COLOR, VERIFY WITH ACM.

PROVIDE A 12"X12' LOUVER VENT IN HOLLOW METAL DOOR, SEE ELEVATIONS.

ELECTRICAL NOTES:

OCCUPANCY SENSOR: GC TO PROVIDE A WALL MOUNTED OCCUPANCY SENSOR, REF ELECTRICAL PLANS FOR MORE INFORMATION.

GC TO INSTALL NEW STRIP LIGHT FIXTURE, PER MANF.'S RECOMMENDATIONS. F25 – 42W LED BY COLUMBIA LIGHTING #LCL4-40ML-EDU.

GC TO PROVIDE A 20A, 120V, RECEPTACLE WITHIN 25 FEET OF THE HVAC EQUIPMENT, PER CODE.

ALL LIGHTING/POWER SHALL BE CONNECTED TO AN APPROPRIATE CIRCUIT IN THE MAIN BUILDING PANELS, VERIFY CIRCUITING PRIOR TO ROUGH-IN.

REV	DATE	DESCRIPTION	BY
1	04/08/2025	COUNTY COMMENTS, M-O OC COMMENTS, & UTILITY COORDINATION	
2	05/09/2025	PLATPLACE ADDITION	

REGISTERED ARCHITECT JEREMY WILLIAMS 7926 STATE OF TEXAS

PREPARED BY:

JAW Architects, Inc.
Jeremy Williams, Architect
Phone: 817-705-3387
Email: jeremy@jaw-arch.com

PREPARED FOR: McDonald's USA, LLC

© 2025 McDonald's USA, LLC
These drawings and specifications are the confidential and proprietary property of McDonald's USA, LLC and shall not be used or reproduced without written authorization. The contract documents were prepared for use on this specific site in conjunction with its issue date and are not suitable for any other purpose or at a subsequent date. These drawings for reference or example on another project requires the services of properly licensed architects and engineers. Reproduction of the contract documents for reuse on another project is not authorized.

DRAWN BY JAW | STD ISSUE DATE 2024 | REVIEWED BY JAW | DATE ISSUED 10/11/2024

TITLE: 2024 STANDARD BUILDING – BB20 4584-WOOD/WOOD

DESCRIPTION: WOOD BEARING WALLS WITH HARDIE SIDING; WOOD ROOF TRUSS FRAMING; EFS/BATTEN/METAL/HARDIE SIDING EXTERIOR FINISHES

SITE ID: 042-3591 | SITE ADDRESS: NWC OF FM 460 & FM 740, FORNEY TEXAS

JAWA 24-0151

SHEET NO. A7.0 DUMP. ENCLOSURE

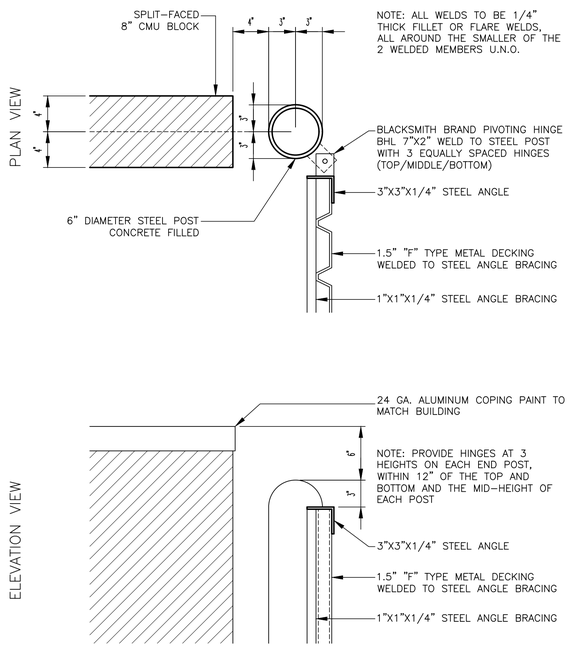

3 **GATE POST DETAIL** SCALE 1-1/2"=1'-0"

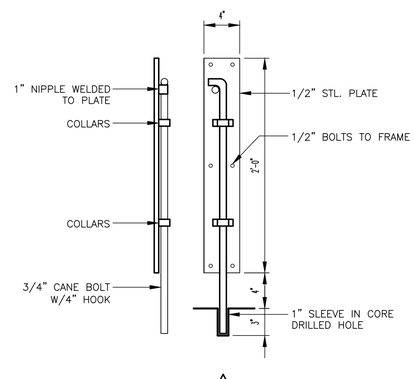

1

NOTES:

1. G.C. TO CUT 1" DIA. – SCHEDULE 40 GALVANIZED STEEL PIPE INTO 3" LONG SECTIONS TO MAKE 1" DIA. x 3" CANE BOLT "SLEEVE" PART #: mp-00002505
2. G.C. CORE DRILL 1.5" DIAMETER HOLD INTO CONCRETE (MIN. 3" TO 3-1/4" DEEP)
3. USE CONCRETE ADHESIVE ANCHOR TO SET "SLEEVE"
4. WIPE/CLEAN AREA AFTER INSTALLATION

G.C. TO PROVIDE TWO CANE BOLT SLEEVES PER EACH GATE

1. CLOSED POSITION: 0 DEGREES
2. OPEN POSITION: 90° MIN. – 120° MAX FROM CLOSED POSITION.

4 **CANE BOLT DETAIL** SCALE 1-1/2"=1'-0"

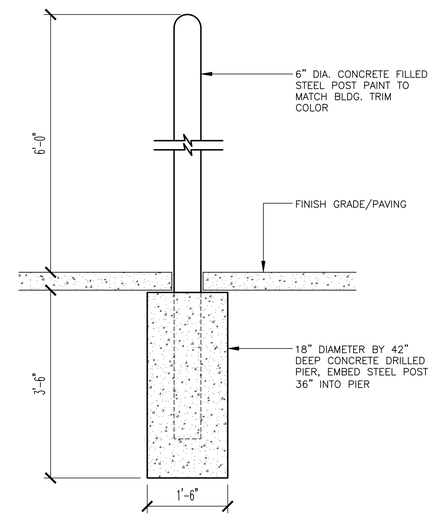

5 **PIPE BOLLARD DETAIL** SCALE 3/4"=1'-0"

REV	DATE	DESCRIPTION	BY
1	04/08/2025	COUNTY COMMENTS, M-O, OC COMMENTS, & UTILITY COORDINATION	

REGISTERED ARCHITECT JEREMY WILLIAMS 7926 STATE OF TEXAS

PREPARED BY:

JAW Architects, Inc.
Jeremy Williams, Architect
Phone: 817-705-3387
Email: jeremy@jaw-arch.com

PREPARED FOR:

© 2025 McDonald's USA, LLC

McDonald's USA, LLC

These drawings and specifications are the confidential and proprietary property of McDonald's USA, LLC and shall not be loaned or reproduced without written authorization. The contract documents were prepared for use on this specific site in conjunction with its issue date and are not suitable for use at any other location or at a subsequent date. Use of these drawings for reference or example on another project requires the services of properly licensed architects and engineers. Reproduction of the contract documents for reuse on another project is not authorized.

DRAWN BY: JAW
STD ISSUE DATE: 2024
REVIEWED BY: JAW
DATE ISSUED: 10/11/2024

TITLE: 2024 STANDARD BUILDING – BB20
4584-WOOD/WOOD

DESCRIPTION:
WOOD BEARING WALLS WITH HARDIE SIDING
WOOD ROOF TRUSS FRAMING
EFS/BATTEN/METAL/HARDIE SIDING EXTERIOR FINISHES

SITE ID: 042-3591
SITE ADDRESS: NWC OF FM 460 & FM 740, FORNEY TEXAS

JAWA 24-0151

SHEET NO. **A7.1**

DUMP. ENCLOSURE

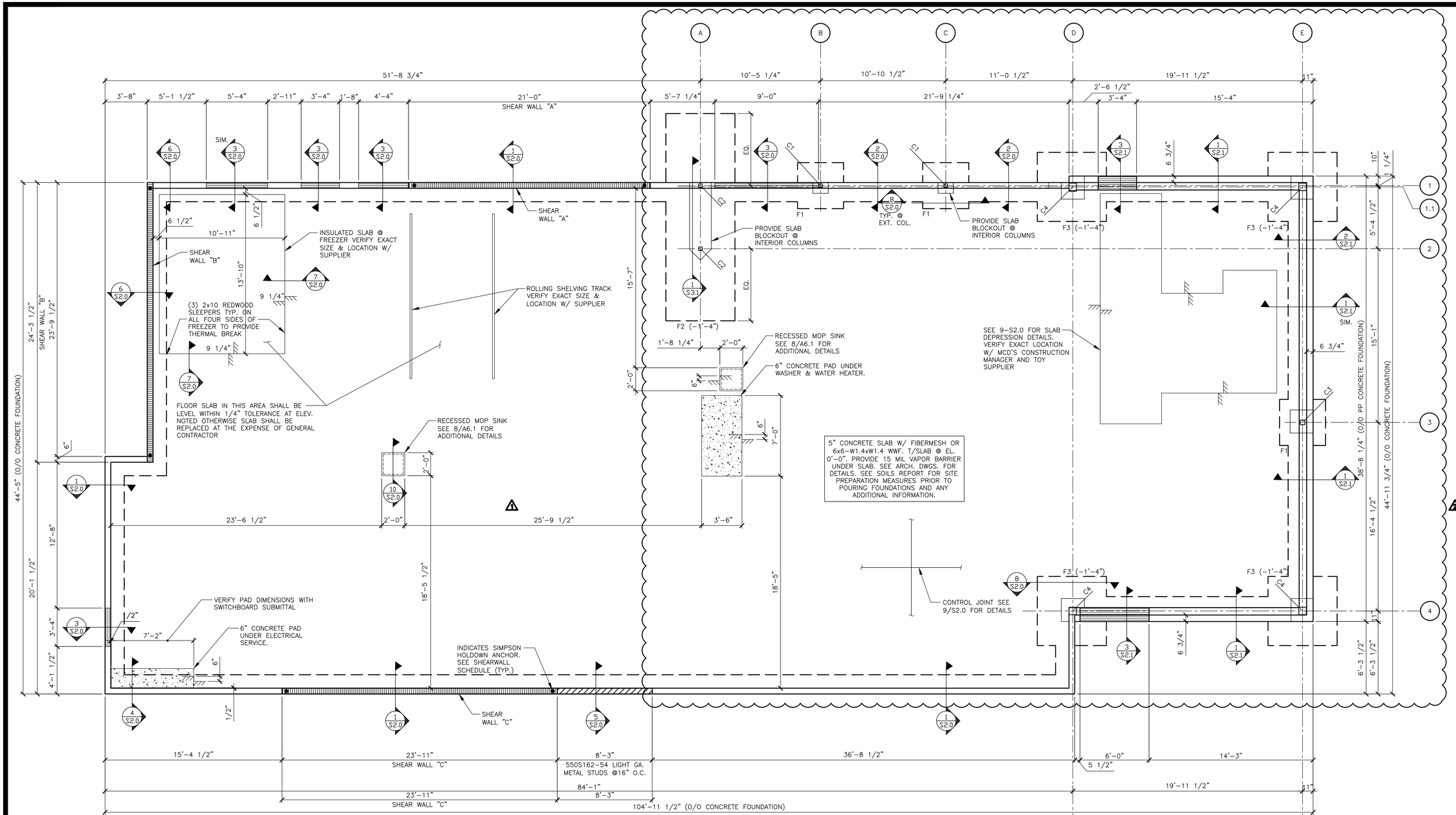

INDICATES FRAME SHEAR WALL. SEE S3.2 FOR SHEAR WALL INFORMATION

INDICATES DEPRESSION IN FOUNDATION WALL @ DOORS. SEE 3/S2.0 FOR THRESHOLD DETAIL.

INDICATES METAL STUD FRAME WALL. SEE 5/S2.0 FOR DETAILS.

1 / S1.0 FOUNDATION PLAN

1/4"=1'-0"

NOTES:

1. BOT OF FOOTING @ EL. (-2'-8") UNLESS NOTED OTHERWISE.
2. SEE SHEET S4.0 FOR GENERAL STRUCTURAL NOTES.
3. PROVIDE POSITIVE DRAINAGE TO ALL FLOOR DRAINS/SINKS (MIN 6") BEYOND DRAIN) SEE PLUMBING DRAWINGS FOR EXACT LOCATIONS
4. SEE SHEET S2.0 FOR TYPICAL CORNER BAR DETAILS.
5. MINIMUM REQUIREMENTS FOR SILL PLATE CONNECTION TO FOUNDATION:
   MINIMUM # OF BOLTS = 2 PER PIECE OF SILL
   MAXIMUM DISTANCE FROM END OF SILL TO ANCHOR = 12"
   MINIMUM DISTANCE FROM END OF SILL TO ANCHOR = 4"
6. WHERE SILL PLATES ARE NOT CONTINUOUS AT ALL LOCATIONS EXCEPT SHEAR WALLS, USE SIMPSON "RPS22Z" TIE FOR NOTCH < 5 1/2", USE SIMPSON "RPS28Z" FOR NOTCH < 12", W/ 16d NAILS INTO SILL PLATE ENDS. (MAX. SPACING BETWEEN STUDS = 16" O.C.)
7. WHERE SILL PLATES ARE NOT CONTINUOUS AT SHEAR WALLS, CONTACT ENGINEER OF RECORD FOR RESPONSE.

FOOTING SCHEDULE

MARK	SIZE	REINFORCING	TOP OF FTG
F1	4'-0"x4'-0"x2'-0"	6-#5 E.W.-B.	-0'-8"
F2	6'-0"x18'-0"x3'-0"	14-#7 L.W.-T&B #6 @ 12" O.C. S.W.-T&B	SEE PLAN
F3	6'-0"x6'-0"x2'-4"	6-#6 E.W.-T&B	SEE PLAN

COLUMN & BASE PLATE SCHEDULE

MARK	MEMBER	SHAPE	BASE PLATE	REMARKS
C1	HSS4x4x5/16	⊕	A	EXTEND TO ROOF
C2	HSS4x4x5/16	⊕	B	BRACED FRAME
C3	HSS5x5x1/4	⊕	A	PLAYPLACE FRAME
C4	HSS8x8x1/2	⊕	C	PLAYPLACE FRAME

NOTE: SEE DETAIL 3/S3.1 FOR BASE PLATE AND ANCHOR ROD DETAILS

REV	DATE	DESCRIPTION
1	04/08/2025	COUNTY COMMENTS, M/D QC COMMENTS, & UTILITY COORDINATION
2	05/09/2025	PLAYPLACE ADDITION

rubix consultants
www.rubixc.com
Rubix Consultants, LLC
4103 N. Southport Ave.
Chicago, IL 60613
(312) 602 5411
FL Firm Reg No. 35923

STATE OF TEXAS
ASHIF PANAKKAT
101398
LICENSED PROFESSIONAL ENGINEER

Signed/Sealed: 05/14/2025

McDonald's USA, LLC
These drawings and specifications are the confidential and proprietary property of McDonald's USA LLC, and shall not be copied or reproduced without written authorization. The contract documents were prepared for use on this specific site in connection with its issue date and are not suitable for re-use on another project. Modification of these drawings for reference or example on another project requires the services of properly licensed architects and engineers. Reproduction of the contract documents for reuse on another project is not authorized.

DRAWN BY MKP
STD ISSUE DATE 2024
REVIEWED BY AP
DATE ISSUED 10/11/2024

DESCRIPTION	SITE ID
WOOD BEARING WALLS WITH HARDIE SIDING	SITE ADDRESS
WOOD ROOF TRUSS FRAMING	NWC OF FM 460 & FM 740, FORNEY TEXAS
EFS/BATTEN/METAL/HARDIE SIDING EXTERIOR FINISHES	
D42-3591	

TITLE: 2024 STANDARD BUILDING - BB20
4584-WOOD/WOOD

JAWA 24-0151

SHEET NO. S1.0
FOUNDATION PLAN

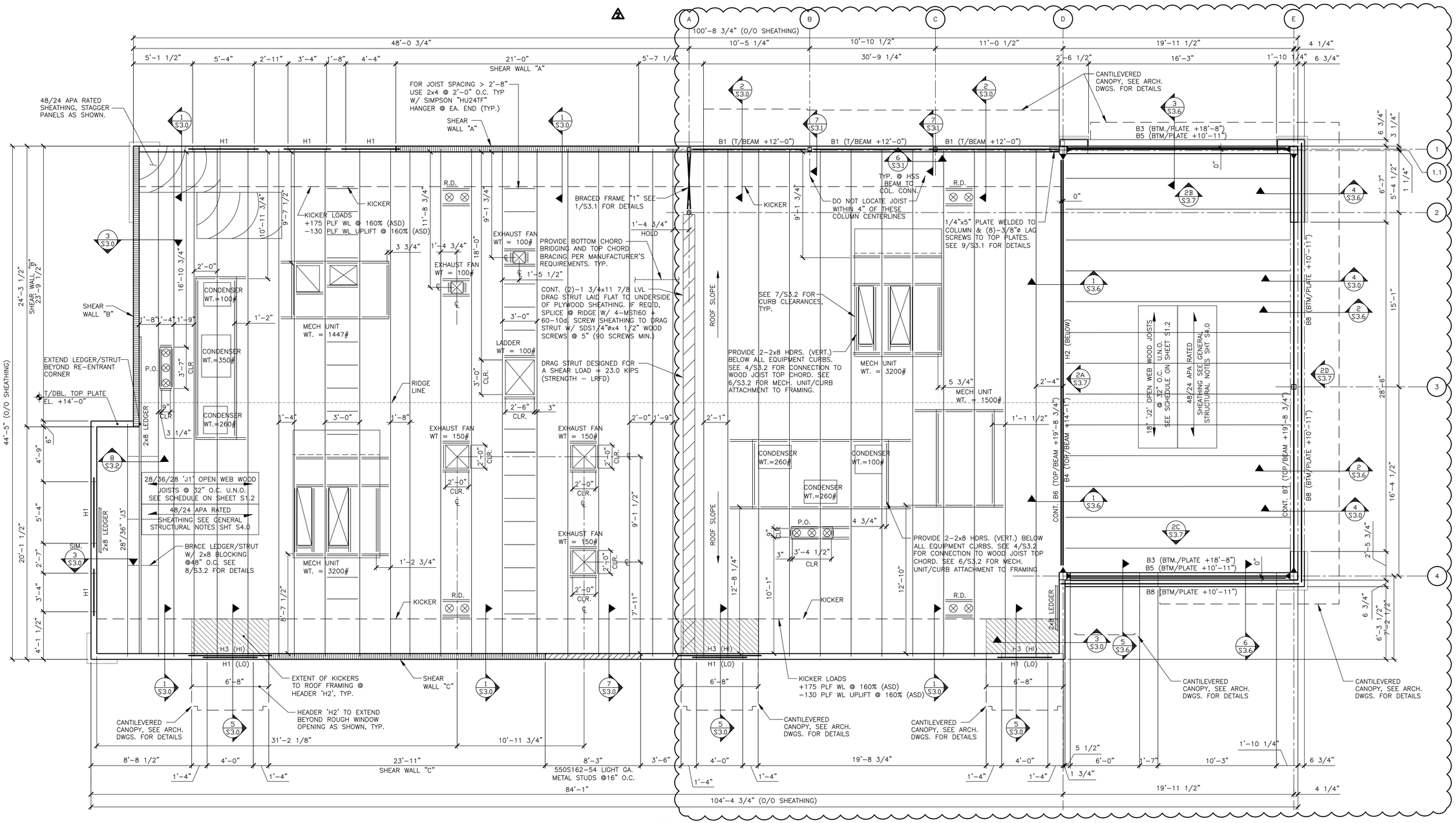

1/S1.2 FRAMING PLAN

1/4"=1'-0"

INDICATES FRAME SHEAR WALL. SEE S3.2 FOR SHEAR WALL INFORMATION

INDICATES METAL STUD FRAME WALL. SEE 7/S3.0 FOR DETAILS.

INDICATES RTU SUPPLY/RETURN ROOF DECK PENETRATIONS. G.C. TO PROVIDE (2)-2x8 HDRS. AT PERIMETER OF ALL PENETRATIONS/OPENINGS PER DETAIL 4/S3.2 AND COORDINATE EXTENT WITH MANUFACTURER SPECIFICATIONS.

NOTES:
1. SEE SHEET S4.0 FOR GENERAL STRUCTURAL NOTES.
2. R.D.: ROOF DRAINS
3. P.O.: ROOF CURB PORTAL OPENING - COORDINATE WITH MECHANICAL DRAWINGS.
4. WHEN TOP PLATES ARE NOT CONTINUOUS, USE SIMPSON "RPS22" TIE FOR NOTCH < 5 1/2", USE SIMPSON "RPS28" TIES FOR NOTCH < 12", W/ 16d NAILS INTO TOP PLATE ENDS. (MAX. SPACING BETWEEN STUDS = 16" O.C.)
5. TOP PLATE SPLICE SHALL BE MINIMUM LENGTH OF 48" WITH 2 ROWS (2 1/2" APART) OF 22-16d COMMON NAILS SPACED @ 2" ON CENTER (44 TOTAL).
6. SEE 5/S3.2 FOR SNOW DRIFT DIAGRAM.

NOTE TO CONTRACTOR:
ANY SPRINKLER LINES GREATER THAN 3" DIAMETER SHALL BE VERIFIED BY THE SPRINKLER CONTRACTOR PRIOR TO TRUSS FABRICATION.

BEAM SCHEDULE

MARK	MEMBER	SHAPE	SUPPORT	REMARKS
B1	HSS16x4x1/4 LLV		1/2" END PLATE	SEE DETAIL 6/S3.1
B2	NOT USED			
B3	W16x36 + 1/4" PLATE		1/2" THRU PLATE	(4)-3/4"ø A325 S.C. BOLTS
B4	W16x57		1/2" THRU PLATE	(4)-3/4"ø A325 S.C. BOLTS
B5	W12x26 + 1/4" PLATE		3/8" THRU PLATE	(3)-3/4"ø A325 S.C. BOLTS
B6	W21x50		1/2" THRU PLATE	(6)-3/4"ø A325 S.C. BOLTS
B7	W16x36		1/2" THRU PLATE	(4)-3/4"ø A325 S.C. BOLTS
B8	HSS12x5x1/4 LLV + 1/4" PLATE		BEARING ANGLE	SEE DETAIL 8/S3.1

HEADER SCHEDULE

MARK	MEMBER	SHAPE	BEARING
H1	5 1/4"x9 1/2" LVL		SEE DETAIL 2/S3.2
H2	5 1/4"x9 1/2" LVL + 2x10		SEE DETAIL 2/S3.2 & 5/S3.1
H3	5 1/4"x11 7/8" LVL		SEE DETAIL 5/S3.0 & 2/S3.2

JOIST SCHEDULE

MARK	LIVE/ROOF SNOW LOAD	DEPTH	MANUFACTURER & SERIES
J1	20/21	28"/36"/28"	REDBUILT "RED-S"
J2	20/21	18"	REDBUILT "RED-S"
J3	20/21	28"/36"	REDBUILT "RED-S"

NOTE: SEE SECTION 4/S3.2 FOR JOIST DETAILS AND SUPPLIER INFORMATION

REV	DATE	DESCRIPTION
1	04/08/2025	COUNTY COMMENTS, M/O QC COMMENTS, & UTILITY COORDINATION
2	05/09/2025	PLAYPLACE ADDITION

rubix consultants
www.rubixcc.com
Rubix Consultants, LLC
4103 N. Southport Ave.
Chicago, IL 60613
(312) 602 5411
FL Firm Reg No. 35923

STATE OF TEXAS
ASHIF PANAKKAT
101398
LICENSED PROFESSIONAL ENGINEER

Signed/Sealed: 05/14/2025

McDonald's USA, LLC
These drawings and specifications are the confidential and proprietary property of McDonald's USA, LLC and shall not be copied or reproduced without written authorization. The contract documents were prepared for use on this specific site in conjunction with its issue date and are not to be used for any other purpose or at any other location. Reuse of these drawings for reference or example on another project requires the services of properly licensed architects and engineers. Reproduction of the contract documents for reuse on another project is not authorized.

DRAWN BY MKP
STD ISSUE DATE 2024
REVIEWED BY AP
DATE ISSUED 10/11/2024

TITLE 2024 STANDARD BUILDING - BB20
4584-WOOD/WOOD
DESCRIPTION WOOD BEARING WALLS WITH HARDIE SIDING
WOOD ROOF TRUSS FRAMING
EIFS/BATTEN/METAL/HARDIE SIDING EXTERIOR FINISHES
SITE ADDRESS: NWC OF FM 460 & FM 740, FORNEY TEXAS
SITE ID 042-3591

SHEET NO. S1.2
JAWA 24-0151
FRAMING PLAN

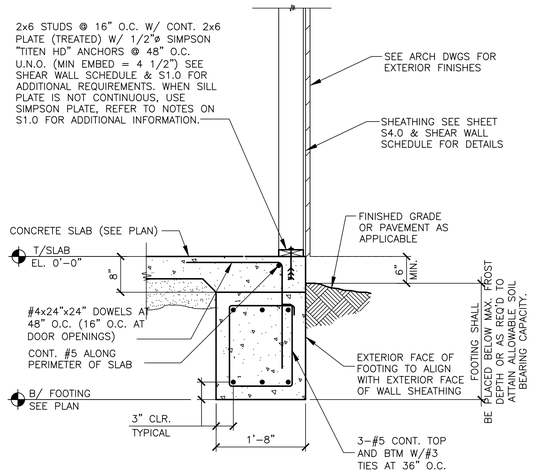

1 S2.0 **SECTION**
3/4" = 1'-0"

SEE SECTION 1/S2.0 FOR ADDITIONAL INFORMATION

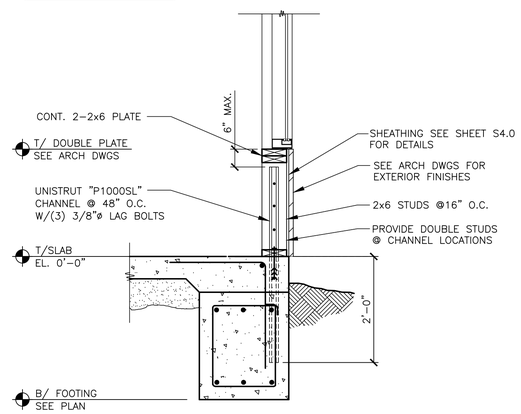

2 S2.0 **SECTION**
3/4" = 1'-0"

SEE SECTION 1/S2.0 FOR ADDITIONAL INFORMATION

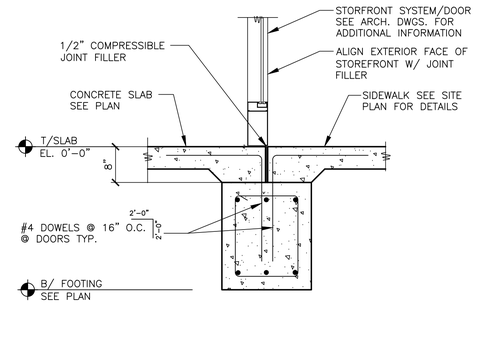

3 S2.0 **SECTION**
3/4" = 1'-0"

SEE SECTION 1/S2.0 FOR ADDITIONAL INFORMATION

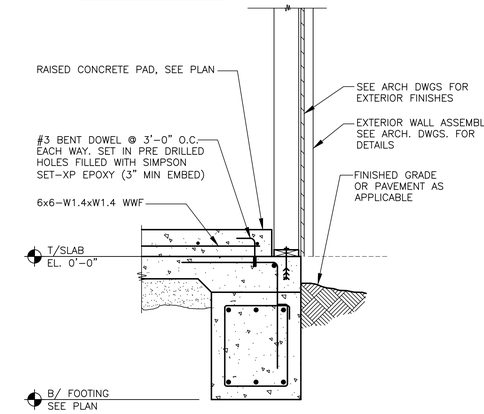

4 S2.0 **SECTION AT PAD**
3/4" = 1'-0"

SEE SECTION 1/S2.0 FOR ADDITIONAL INFORMATION

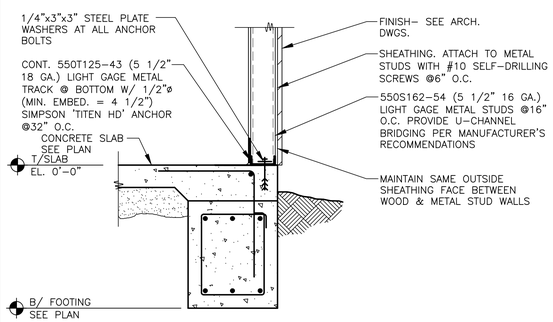

5 S2.0 **SECTION**
3/4" = 1'-0"

SEE SECTION 1/S2.0 & 7/S2.0 FOR ADDITIONAL INFORMATION

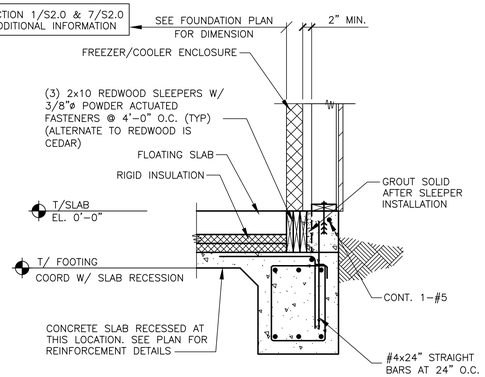

6 S2.0 **SECTION**
3/4" = 1'-0"

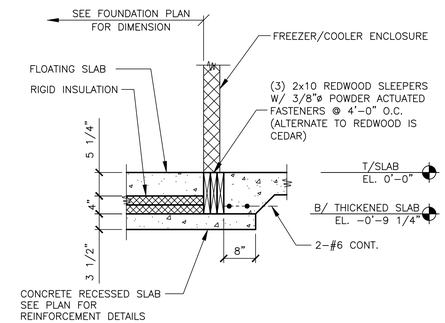

7 S2.0 **SECTION**
3/4" = 1'-0"

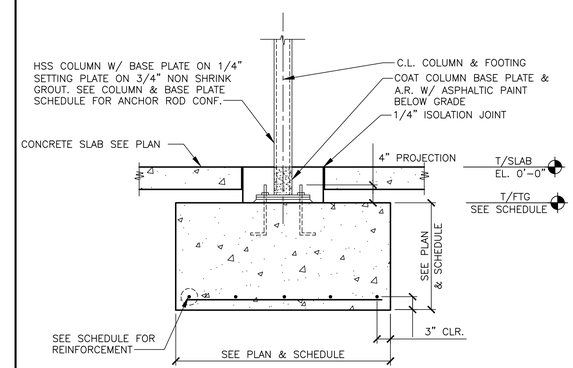

8 S2.0 **ISOLATED COLUMN FOOTING DETAIL**
3/4" = 1'-0"

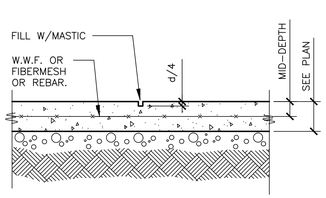

CONTROL JOINT

SAWCUT MAX. NEXT MORNING AFTER SLAB IS CAST

CONTROL JOINTS SHALL BE IN A SQUARE PATTERN OF 400 SQ. FT. AND/OR THE LENGTH SHALL NOT BE MORE THAN 2x WIDTH. ALIGN WITH COLUMN CENTER LINES.

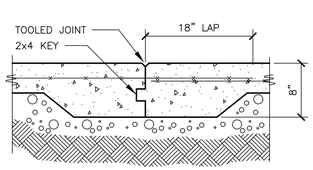

CONSTRUCTION JOINT

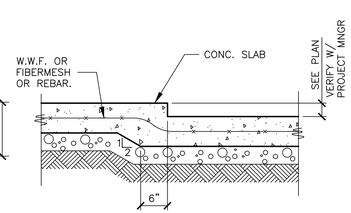

SLAB DEPRESSION

SLAB-ON-GRADE TO BEAR ON PROPERLY PREPARED NEW ENGINEERED FILL, FIRM RESIDUAL SOILS, OR APPROVED EXIST. FILL. SEE GEOTECHNICAL REPORT FOR ADDITIONAL INFORMATION.

9 S2.0 **SLAB ON GRADE DETAILS**
N.T.S.

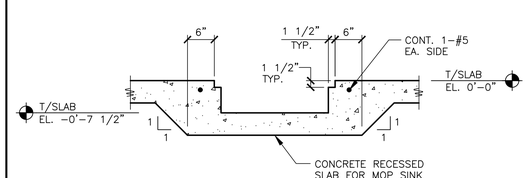

NOTE:
WHERE PREFAB MOP SINK IS USED, DEPTH TO BE 8 7/8" TO ACCOMMODATE FACTORY-BUILT MOP SINK DIMENSION

10 S2.0 **RECESSED SLAB DETAIL**
3/4" = 1'-0"

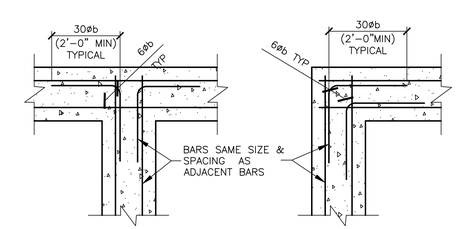

TYPICAL CORNER BAR DETAIL

11 S2.0 **CORNER BAR DETAILS**
N.T.S.

REV	DATE	DESCRIPTION

rubix consultants
www.rubixc.com
Rubix Consultants, LLC
4103 N. Southport Ave.
Chicago, IL 60613
(312) 602 5411
FL Firm Reg No. 35923

STATE OF TEXAS
ASHIF PANAKKAT
101398
LICENSED PROFESSIONAL ENGINEER

Signed/Sealed:
10/09/2024

McDonald's USA, LLC

These drawings and specifications are the confidential and proprietary property of McDonald's USA, LLC and shall not be copied or reproduced without written authorization. The contract documents were prepared for use on this specific site in conjunction with the issue date and are not suitable for use on other sites or projects. Re-use of these drawings for reference or example on another project requires the services of properly licensed architects and engineers. Reproduction of the contract documents for re-use on another project is not authorized.

DRAWN BY MKP
STD ISSUE DATE 2024
REVIEWED BY AP
DATE ISSUED 10/11/2024

TITLE
2024 STANDARD BUILDING - BB20
4584-WOOD/WOOD

DESCRIPTION
WOOD BEARING WALLS WITH HARDIE SIDING
WOOD ROOF TRUSS FRAMING
EFS/BATTEN/METAL/HARDIE SIDING EXTERIOR FINISHES

SITE ID 042-3591
SITE ADDRESS NWC OF FM 460 & FM 740, FORNEY TEXAS

JAWA 24-0151

SHEET NO. **S2.0**
FOUNDATION SECTIONS

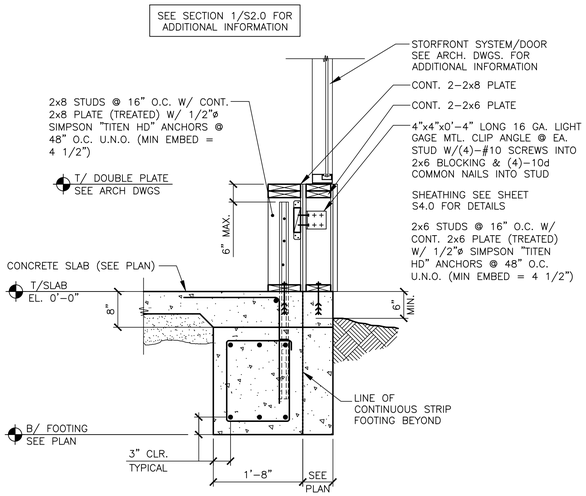

1 S2.1 **SECTION**
3/4" = 1'-0"

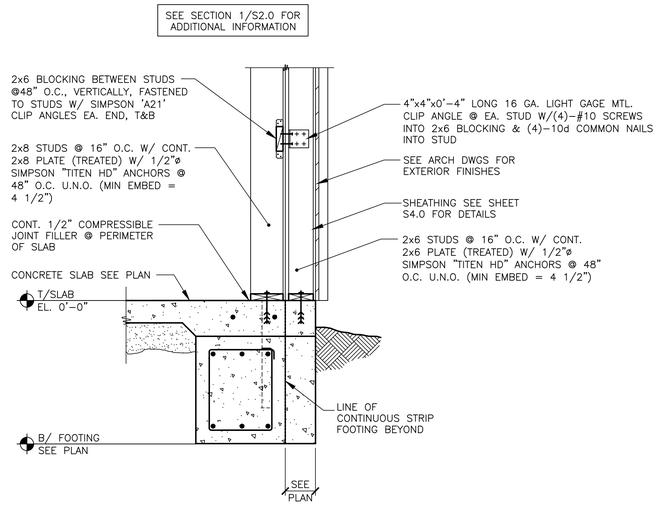

2 S2.1 **SECTION**
3/4" = 1'-0"

REV	DATE	DESCRIPTION
1	04/08/2025	COUNTY COMMENTS, M/O QC COMMENTS, & UTILITY COORDINATION
2	05/09/2025	PLAYPLACE ADDITION

rubix consultants
www.rubixc.com
Rubix Consultants, LLC
4103 N. Southport Ave.
Chicago, IL 60613
(312) 602 5411
FL Firm Reg No. 35923

STATE OF TEXAS
ASHIF PANAKKAT
101398
LICENSED
PROFESSIONAL ENGINEER

Signed/Sealed: 04/12/2025

McDonald's USA, LLC

These drawings and specifications are the confidential and proprietary property of McDonald's USA, LLC, and shall not be copied or reproduced without written authorization. The contract documents were prepared for use on this specific site in connection with its issue date and are not suitable for use on any other project or at a later time. Use of these drawings for reference or example on another project requires the services of properly licensed architects and engineers. Reproduction of this contract documents for use on another project is not authorized.

DRAWN BY MKP
STD ISSUE DATE 2024
REVIEWED BY AP
DATE ISSUED 10/11/2024

TITLE
2024 STANDARD BUILDING - BB20
4584-WOOD/WOOD

DESCRIPTION
WOOD BEARING WALLS WITH HARDIE SIDING
WOOD ROOF TRUSS FRAMING
EFS/BATTEN/METAL/HARDIE SIDING EXTERIOR FINISHES

SITE ID 042-3591
SITE ADDRESS NWC OF FM 460 & FM 740, FORNEY TEXAS

JAWA 24-0151

SHEET NO. S2.1
FOUNDATION SECTIONS

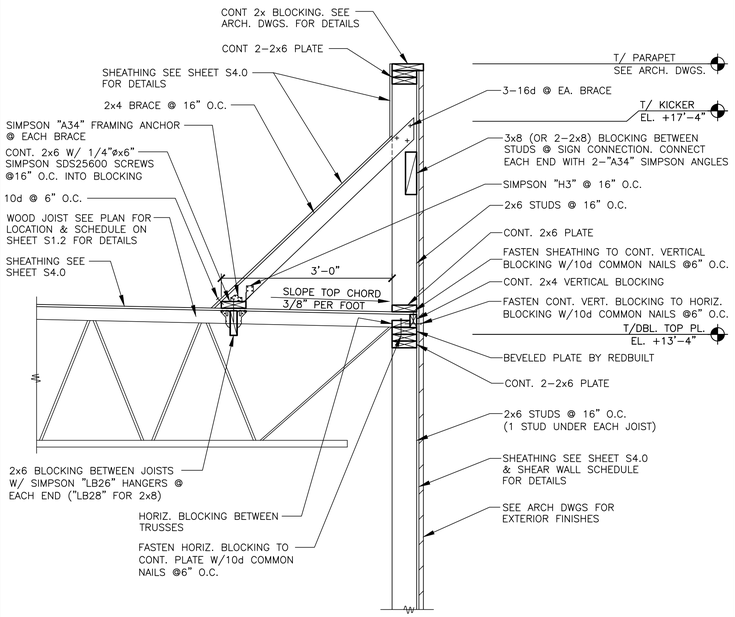

1 S3.0 **SECTION**
3/4" = 1'–0"

SEE SECTION 1/S3.0 FOR ADDITIONAL INFORMATION

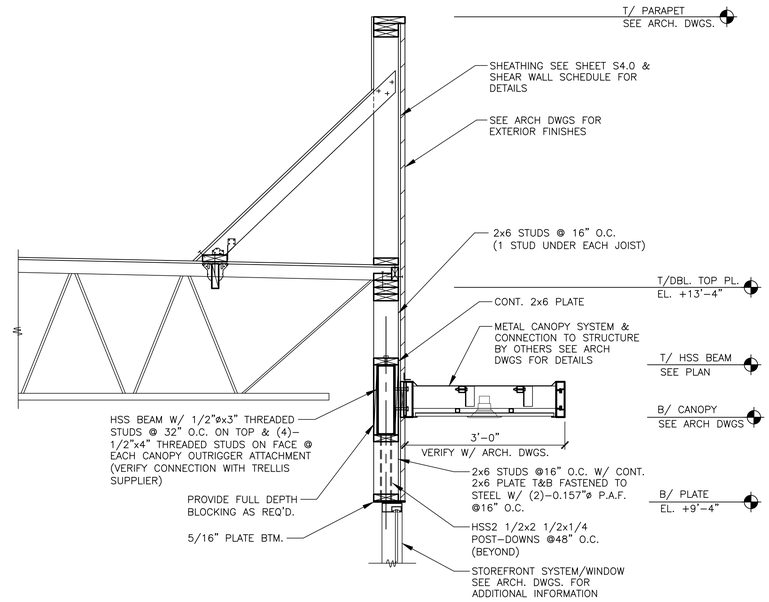

2 S3.0 **SECTION**
3/4" = 1'–0"

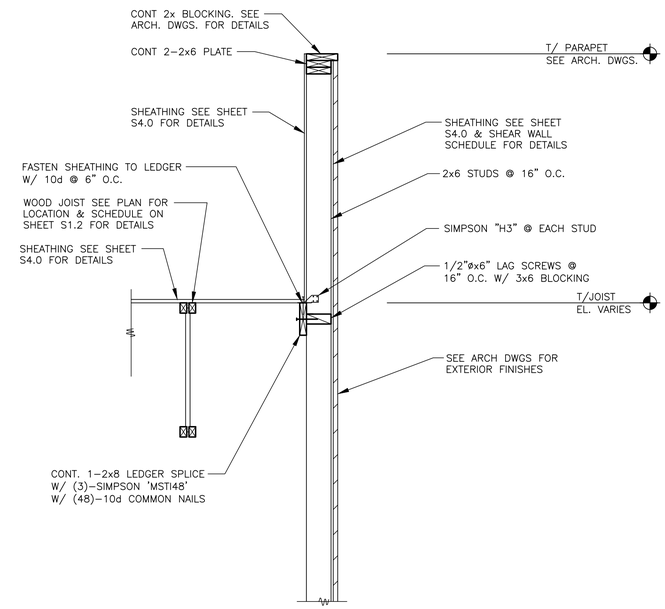

3 S3.0 **SECTION**
3/4" = 1'–0"

4 S3.0 **NOT USED**
N.T.S.

SEE SECTION 1/S3.0 FOR ADDITIONAL INFORMATION

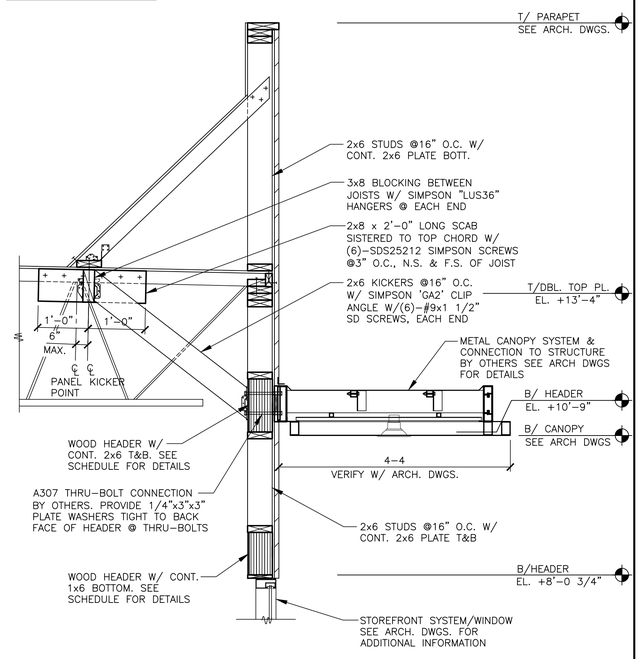

5 S3.0 **SECTION**
3/4" = 1'–0"

6 S3.0 **NOT USED**
N.T.S.

SEE SECTION 1/S3.0 FOR ADDITIONAL INFORMATION

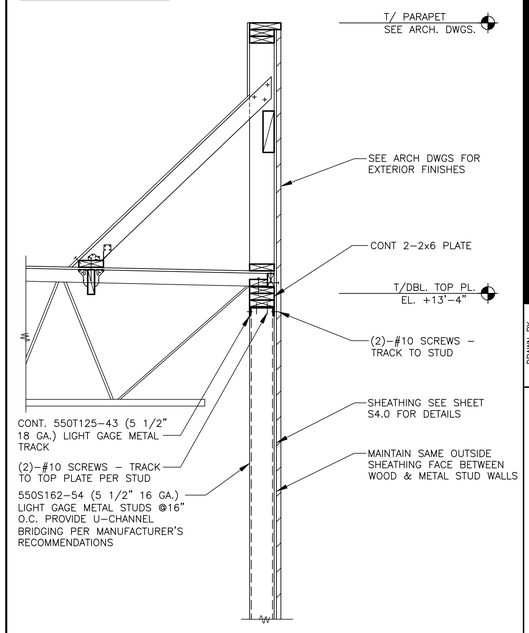

7 S3.0 **SECTION**
3/4" = 1'–0"

REV	DATE	DESCRIPTION
1	04/08/2025	COUNTY COMMENTS, M/O QC COMMENTS, & UTILITY COORDINATION
2	05/09/2025	PLAYPLACE ADDITION

rubix consultants
www.rubixc.com
Rubix Consultants, LLC
4103 N. Southport Ave.
Chicago, IL 60613
(312) 602 5411
FL Firm Reg No. 35923

STATE OF TEXAS
ASHIF PANAKKAT
101398
LICENSED PROFESSIONAL ENGINEER

Signed/Sealed: 05/14/2025

McDonald's USA, LLC

These drawings and specifications are the confidential and proprietary property of McDonald's USA, LLC and shall not be copied or reproduced without written authorization. The contract documents were prepared for use on this specific site in conjunction with its issue date and are subject to revisions or withdrawal at any time. Any other use of these drawings for reference or example on another project requires the services of properly licensed architects and engineers. Reproductions of the contract documents for reuse on another project is not authorized.

DRAWN BY MKP
STD ISSUE DATE 2024
REVIEWED BY AP
DATE ISSUED 10/11/2024

TITLE
2024 STANDARD BUILDING – BB20
4584–WOOD/WOOD

DESCRIPTION	
WOOD BEARING WALLS WITH HARDIE SIDING	
WOOD ROOF TRUSS FRAMING	
EIFS/BATTEN/METAL/HARDIE SIDING EXTERIOR FINISHES	
SITE ID	SITE ADDRESS
D42–3591	NWC OF FM 460 & FM 740, FORNEY TEXAS

SHEET NO.
JAWA 24–0151
S3.0
FRAMING SECTIONS

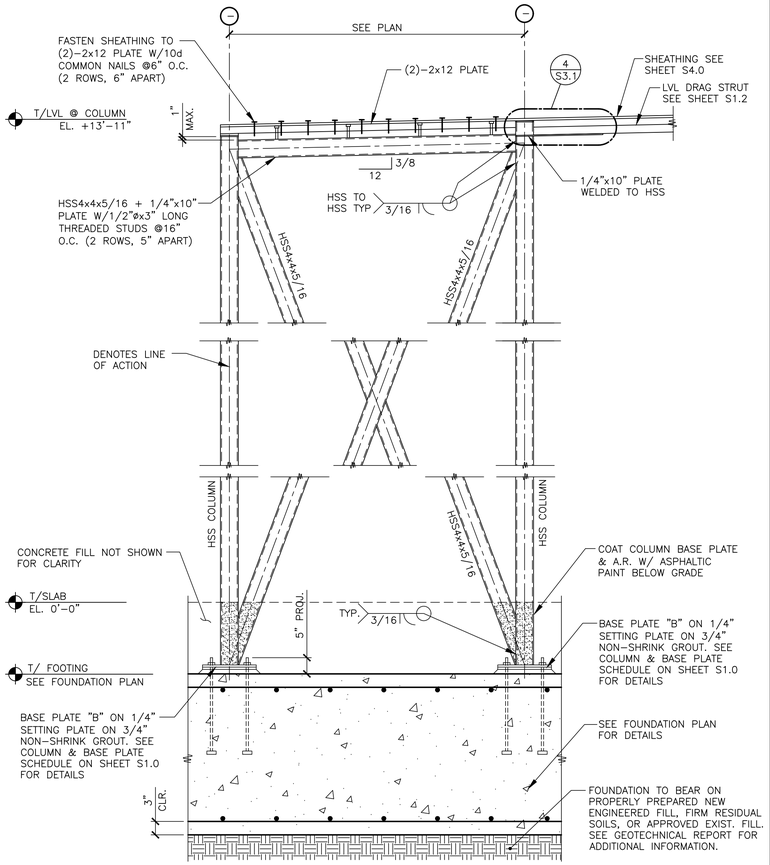

1 S3.1 **BRACED FRAME DETAIL AT INTERIOR**
3/4" = 1'-0"

2 S3.1 **NOT USED**
N.T.S.

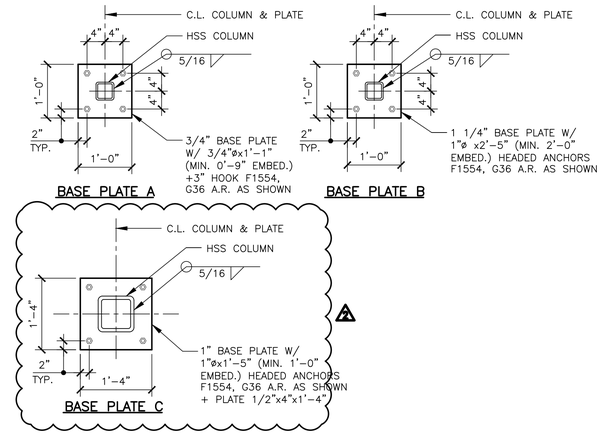

3 S3.1 **BASE PLATE DETAILS**
N.T.S.

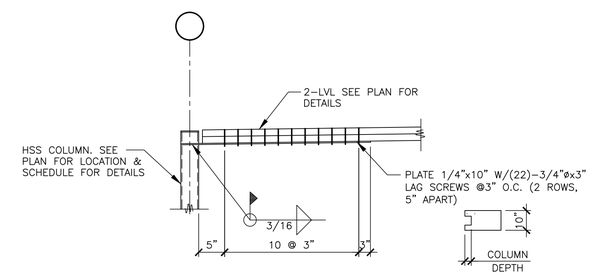

4 S3.1 **DRAG STRUT CONNECTION DETAIL**
3/4" = 1'-0"

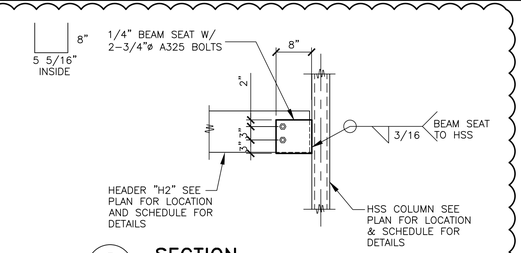

5 S3.1 **SECTION**
3/4" = 1'-0"

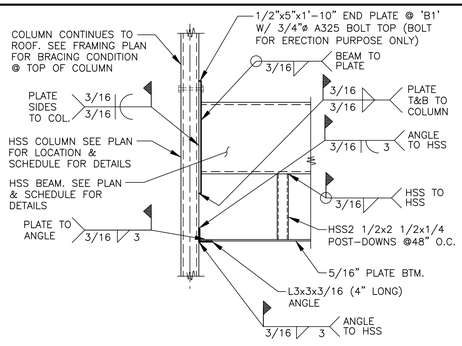

6 S3.1 **HSS BEAM CONNECTION DETAIL**
3/4" = 1'-0"

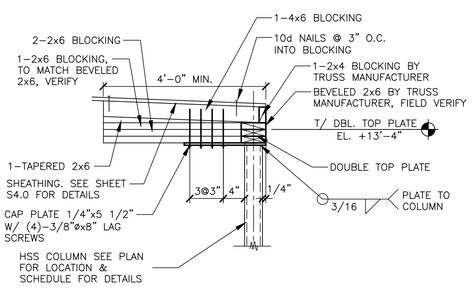

7 S3.1 **COLUMN BRACING DETAIL**
3/4" = 1'-0"

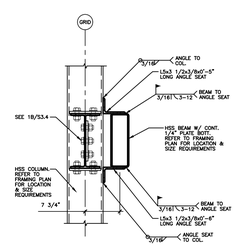

8 S3.1 **HSS TO HSS CONENCTION**
3/4" = 1'-0"

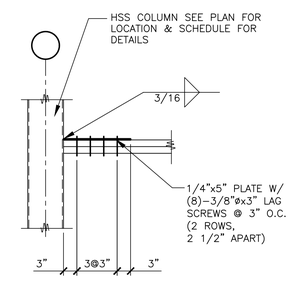

9 S3.1 **SECTION**
3/4" = 1'-0"

REV	DATE	DESCRIPTION
1	04/08/2025	COUNTY COMMENTS, M.O. OC COMMENTS, & UTILITY COORDINATION
2	05/09/2025	PLAYPLACE ADDITION

rubix consultants
www.rubixc.com
Rubix Consultants, LLC
410 N. Southport Ave.
Chicago, IL 60613
(312) 602 5411
FL Firm Reg No. 35923

STATE OF TEXAS
ASHIF PANAKKAT
101398
LICENSED PROFESSIONAL ENGINEER

Signed/Sealed: 05/14/2025

McDonald's USA, LLC

These drawings and specifications are the confidential and proprietary property of McDonald's USA, LLC and shall not be copied or reproduced without written authorization. The contract documents were prepared for use on this specific site in conjunction with its issue date and are not suitable for use at any other location or on any other project. Reuse of these drawings for reference or example on another project requires the services of properly licensed architects and engineers. Reproduction of the contract documents for reuse on another project is not authorized.

DRAWN BY MKP
STD ISSUE DATE 2024
REVIEWED BY AP
DATE ISSUED 10/11/2024

TITLE: 2024 STANDARD BUILDING – BB20
4584-WOOD/WOOD

DESCRIPTION
WOOD BEARING WALLS WITH HARDIE SIDING
WOOD ROOF TRUSS FRAMING
EFS/BATTEN/METAL/HARDIE SIDING EXTERIOR FINISHES

SITE ID: D42-3591
SITE ADDRESS: NWC OF FM 460 & FM 740, FORNEY TEXAS

JAWA 24-0151

SHEET NO. **S3.1**
STEEL DETAILS

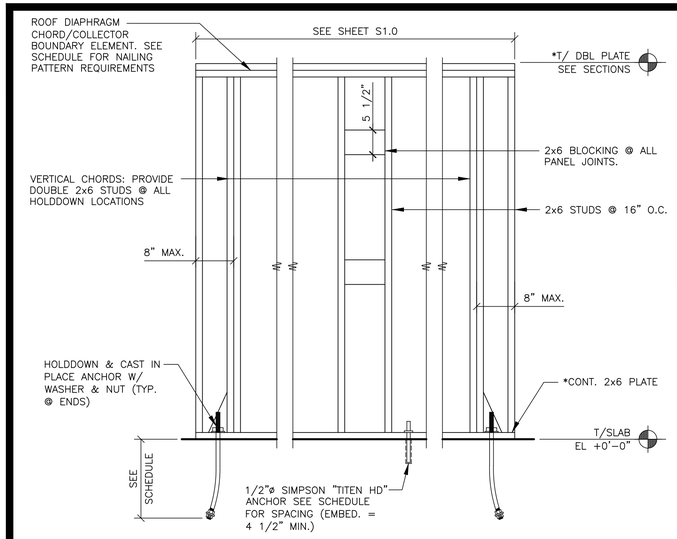

1 S3.2 **SHEAR WALL SCHEDULE**

N.T.S.

SHEAR WALL SCHEDULE

WIND: 105 MPH (EXPOSURE C) SEISMIC: Sds = 11%, Sd1 = 8.6% △1

MARK	SHEATHING	SHEATHING NAIL SIZE	SHEATHING NAIL** SPACING @ PANEL EDGES	HOLDDOWN*** ANCHORS	ANCHOR BOLT SPACING	REMARKS
A	1-15/32"	8d	6"	1-HDU5-SDS2.5 W/(1) SB5/8x24" PRECAST ANCHOR	40"	18" MIN. EMBED. ON HOLDDOWN ANCHORS.
B	1-15/32"	8d	6"	1-HDU5-SDS2.5 W/(1) SB5/8x24" PRECAST ANCHOR	32"	18" MIN. EMBED. ON HOLDDOWN ANCHORS.
C	1-15/32"	8d	6"	1-HDU5-SDS2.5 W/(1) SB5/8x24" PRECAST ANCHOR	40"	18" MIN. EMBED. ON HOLDDOWN ANCHORS.

NOTES:
1. SHEATHING PANELS MAY BE LAID UP HORIZONTALLY OR VERTICALLY. NO VERTICAL PANEL EDGES ON VERTICAL CHORDS (HOLDDOWN LOCATION).
2. WIND LOADS GOVERN OVER SEISMIC LOADS UNLESS AS NOTED IN THE REMARKS COLUMN.
3. NAIL ALL SHEATHING TO INTERMEDIATE SUPPORTS @ 12" O.C.
4. SCREW HOLDOWN ANCHORS TO VERTICAL MEMBER W/ 14-"SDS1/4"ø x2 1/2" SCREWS EACH.

* IF SILL PLATE OR TOP PLATES ARE NOT CONTINUOUS, CONTACT THE ENGINEER OF RECORD FOR SOLUTION.
** NAIL WALL SHEATHING TO ROOF DIAPHRAGM CHORD & TO EACH MEMBER/WALL VERTICAL CHORD W/ 10d COMMON NAILS @ 6" O.C., UNO.
*** HOLD DOWNS AND HOLD DOWN ANCHOR SYSTEMS PER SIMPSON STRONG TIE & SHALL BE INSTALLED PER MANUFACTURER SPECIFICATIONS.

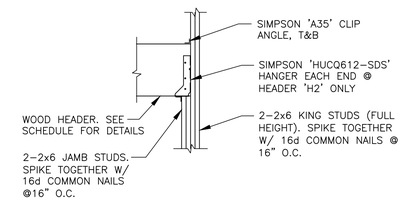

2 S3.2 **HEADER SUPPORT DETAIL**

N.T.S.

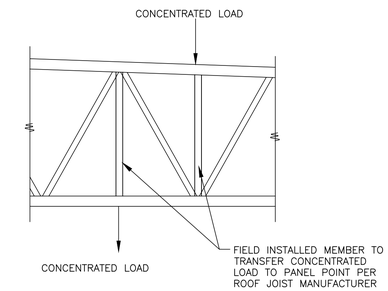

3 S3.2 **JOIST DETAIL @ POINT LOADS**

N.T.S.

1. FOR NATIONAL ACCOUNT PACKAGE & PRICING CONTACT REDBUILT @ 1-866-859-6757
2. JOIST MFGR. TO VERIFY SIZE AT HVAC ROOF TOP UNITS.

HEADER	HANGER
2x6	LUS26
2-2x6	LUS26-2
2x8	LUS28
2-2x8	LUS28-2
2x10	LUS210
2-2x10	LUS210-2

FOR OPENINGS < 1'-4" USE 1-2x6
FOR OPENINGS > 1'-4" AND < 4'-0" USE 2-2x8
FOR OPENINGS > 4'-0" AND < 6'-0" USE 2-2x10

3. ALL JOISTS SHALL BE DESIGNED FOR THE FOLLOWING NET UPLIFT. 105 MPH (BASIC) - 8 PSF SERVICE (ASD: 0.6D + 0.6W)

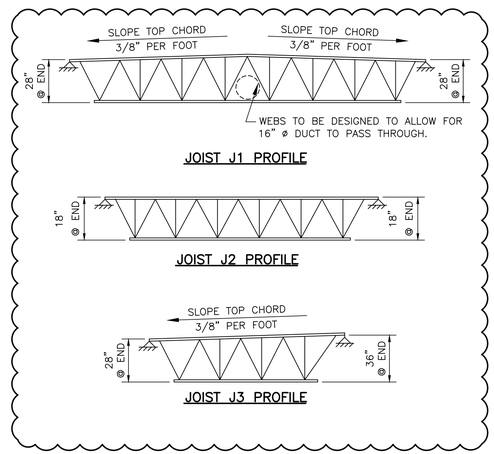

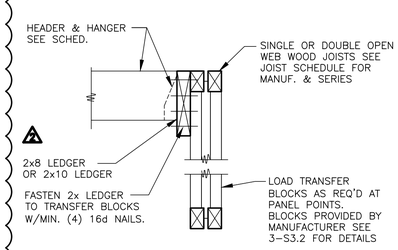

4 S3.2 **JOIST NOTES**

N.T.S.

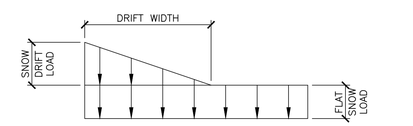

△1

DRIFT	SNOW DRIFT LOAD (PSF)	WIDTH (FT)
SHORT DIRECTION	21.8	5'-7"
LONG DIRECTION	30.3	7'-9"

NOTE: SNOW DRIFT LOADS BASED ON NOMINAL, UNFACTORED GROUND SNOW LOADS. SEE SHEET S4.0 FOR ADDITIONAL INFORMATION.

5 S3.2 **SNOW DRIFT DIAGRAM/SCHEDULE**

N.T.S

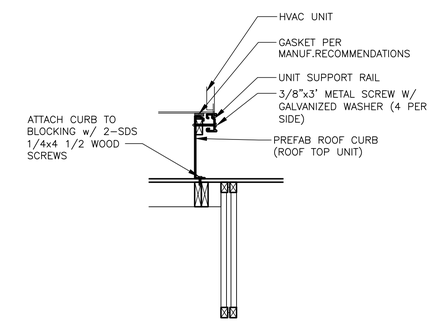

6 S3.2 **SECTION**

3/4" = 1'-0"

NOTE: RTU VENDOR/SUPPLIER AND MODEL SHALL BE VERIFIED PRIOR TO INSTALLATION. G.C. TO PROVIDE (2)-2x8 HDRS. BELOW RTU CURBS AND AT PERIMETER OF ALL PENETRATIONS/OPENINGS PER DETAIL 4/S3.2. COORDINATE LOCATIONS AND EXTENT WITH MANUFACTURER CURB SPECIFICATIONS.

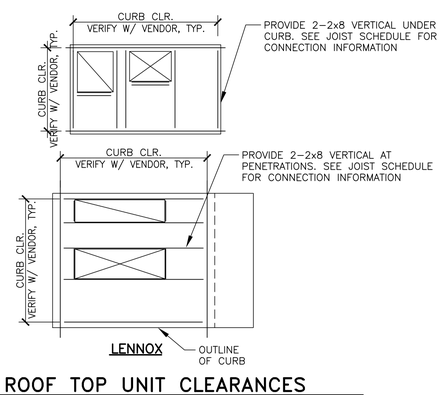

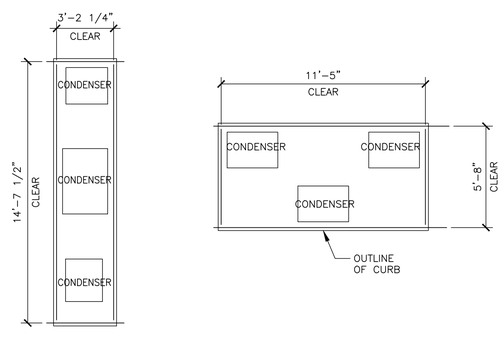

7 S3.2 **ROOF TOP UNIT CLEARANCES**

1/4" = 1'-0"

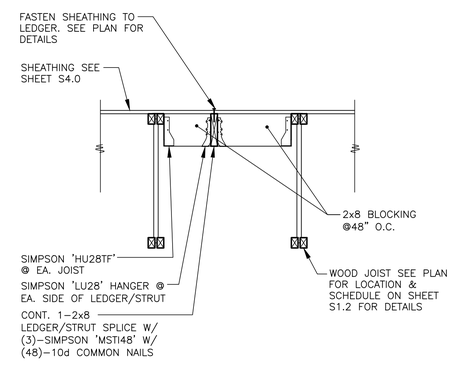

8 S3.2 **SECTION**

3/4" = 1'-0"

9 S3.2 **NOT USED**

N.T.S.

REV	DATE	DESCRIPTION
1	04/08/2025	COUNTY COMMENTS, M/O QC COMMENTS, & UTILITY COORDINATION
2	05/09/2025	PLAYPLACE ADDITION

rubix consultants
www.rubixc.com
Rubix Consultants, LLC
4103 N. Southport Ave.
Chicago, IL 60613
(312) 602 5411
FL Firm Reg No. 35923

STATE OF TEXAS
ASHIF PANAKKAT
101398
LICENSED PROFESSIONAL ENGINEER

Signed/Sealed: 05/14/2025

McDonald's USA, LLC

These drawings and specifications are the confidential and proprietary property of McDonald's USA, LLC and shall not be copied or reproduced without written authorization. The contract documents were prepared for use on this specific site in conjunction with its issue date and are not suitable for use on other sites or at other times. Re-use of these drawings for reference or example on another project requires the services of properly licensed architects and engineers. Reproduction of the contract documents for re-use on another project is not authorized.

DRAWN BY: MKP
STD ISSUE DATE: 2024
REVIEWED BY: AP
DATE ISSUED: 10/11/2024

TITLE: 2024 STANDARD BUILDING - BB20 4584-WOOD/WOOD

DESCRIPTION: WOOD BEARING WALLS WITH HARDIE SIDING
WOOD ROOF TRUSS FRAMING
EFS/BATTEN/METAL/HARDIE SIDING EXTERIOR FINISHES

SITE ID: 042-3591
SITE ADDRESS: NWC OF FM 460 & FM 740, FORNEY TEXAS

JAWA 24-0151

SHEET NO. S3.2
DETAILS

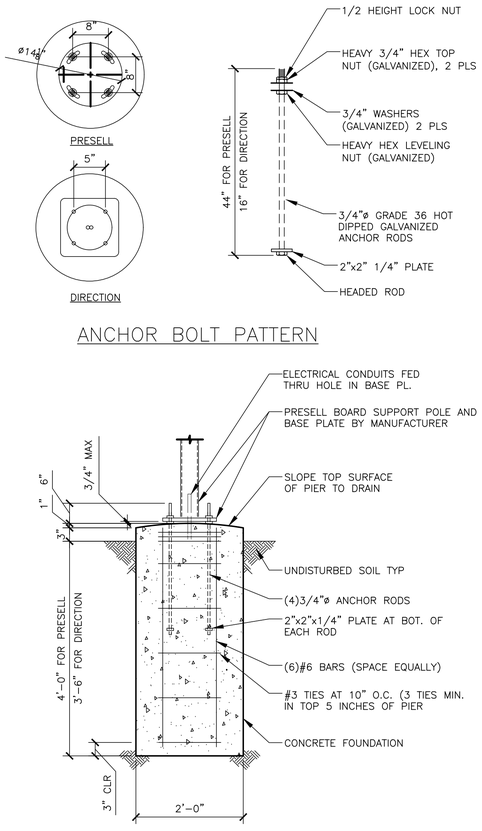

1 S3.3 FOUNDATION FOR PRESELL & DIRECTION BOARD

3/4" = 1'-0"

- SEE SHEET S4.0 FOR FOUNDATION, CONCRETE AND STRUCTURAL STEEL GENERAL NOTES
- DESIGN LOADS DERIVED FROM CODES AND FORCES
  - AXIAL – 120# (PRESELL) 180# (DIRECTION)
  - SHEAR – 267# (PRESELL) 270# (DIRECTION)
  - MOMENT – 1,219#' (PRESELL) 1,010#' (DIRECTION)
- ALL FOOTING EXCAVATIONS ARE TO BE CLEAR OF WATER AND FOREIGN MATTER BEFORE PLACING CONCRETE
- TOP 6" OF SOIL NEGLECTED IN EMBEDMENT DEPTH CALCULATIONS (EMBEDMENT DEPTHS SHOWN ARE FROM GRADE)
- ELECTRICAL CONTRACTOR TO PROVIDE INFORMATION ON CONDUIT AND ELECTRICAL REQUIREMENTS.
- ALL FOOTINGS SHALL BEAR ON FIRM UNDISTURBED RESIDUAL SOIL AND/OR ENGINEERED EARTH FILL COMPACTED TO 98% OF ITS MAXIMUM DRY DENSITY AS PER ASTM D 698–70 (STANDARD PROCTOR) UNLESS NOTED OTHERWISE.
- TOP OF PIERS SHALL BE SLOPED SUCH THAT MOISTURE CANNOT ACCUMULATE.
- DO NOT PLACE POLES ON CONCRETE UNTIL CONCRETE HAS CURED PER MCDONALDS CAST–IN–PLACE CONCRETE SPECIFICATION, SECTION 3.11–E. ERFORMED IN ACCORDANCE WITH AWS D1.1.
- REFER TO SIGN MANUFACTURER DRAWINGS AND INSTRUCTIONS FOR ADDITIONAL INFORMATION.
- ANCHOR RODS, NUTS, AND WASHERS SHALL BE SHIPPED AS AN ASSEMBLY FROM THE SIGN/LIGHTING MANUFACTURER
- DO NOT CUT ANCHOR BOLTS AFTER INSTALLATION OF POLE
- HIS FOUNDATION TO BE USED ONLY WITH FLORIDA PLASTICS INTERNATIONAL INC. STANDARD OPO–1 PRESELL BOARD

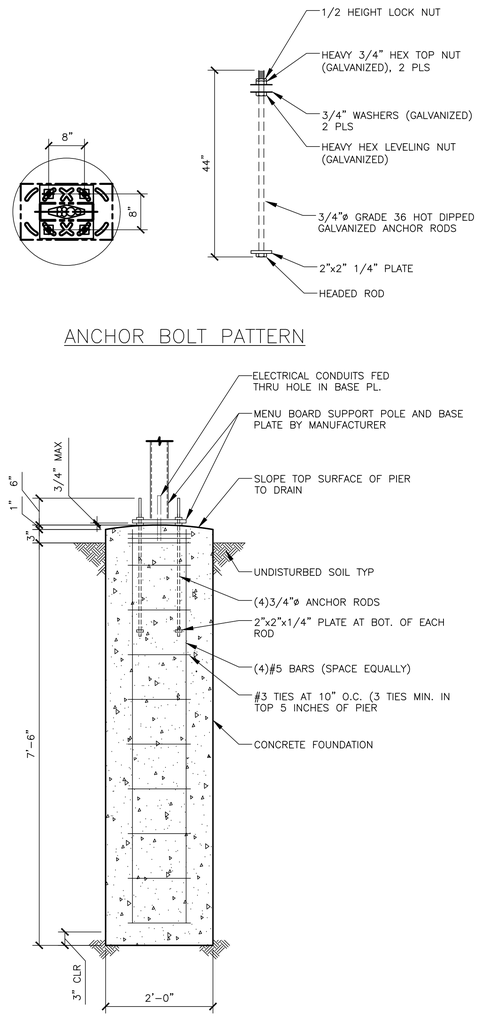

2 S3.3 FOUNDATION FOR MENU BOARD

3/4" = 1'-0"

- SEE SHEET S4.0 FOR FOUNDATION, CONCRETE AND STRUCTURAL STEEL GENERAL NOTES
- DESIGN LOADS DERIVED FROM CODES AND FORCES
  - AXIAL – 850#
  - SHEAR – 1310#
  - MOMENT – 7,294#'
- ALL FOOTING EXCAVATIONS ARE TO BE CLEAR OF WATER AND FOREIGN MATTER BEFORE PLACING CONCRETE
- TOP 6" OF SOIL NEGLECTED IN EMBEDMENT DEPTH CALCULATIONS (EMBEDMENT DEPTHS SHOWN ARE FROM GRADE)
- ELECTRICAL CONTRACTOR TO PROVIDE INFORMATION ON CONDUIT AND ELECTRICAL REQUIREMENTS.
- ALL FOOTINGS SHALL BEAR ON FIRM UNDISTURBED RESIDUAL SOIL AND/OR ENGINEERED EARTH FILL COMPACTED TO 98% OF ITS MAXIMUM DRY DENSITY AS PER ASTM D 698–70 (STANDARD PROCTOR) UNLESS NOTED OTHERWISE.
- TOP OF PIERS SHALL BE SLOPED SUCH THAT MOISTURE CANNOT ACCUMULATE.
- DO NOT PLACE POLES ON CONCRETE UNTIL CONCRETE HAS CURED PER MCDONALDS CAST–IN–PLACE CONCRETE SPECIFICATION, SECTION 3.11–E. ERFORMED IN ACCORDANCE WITH AWS D1.1.
- REFER TO SIGN MANUFACTURER DRAWINGS AND INSTRUCTIONS FOR ADDITIONAL INFORMATION.
- ANCHOR RODS, NUTS, AND WASHERS SHALL BE SHIPPED AS AN ASSEMBLY FROM THE SIGN/LIGHTING MANUFACTURER
- DO NOT CUT ANCHOR BOLTS AFTER INSTALLATION OF POLE
- DETAILS AND STRUCTURAL MEMBERS NOT SHOWN DESIGNED BY OTHERS

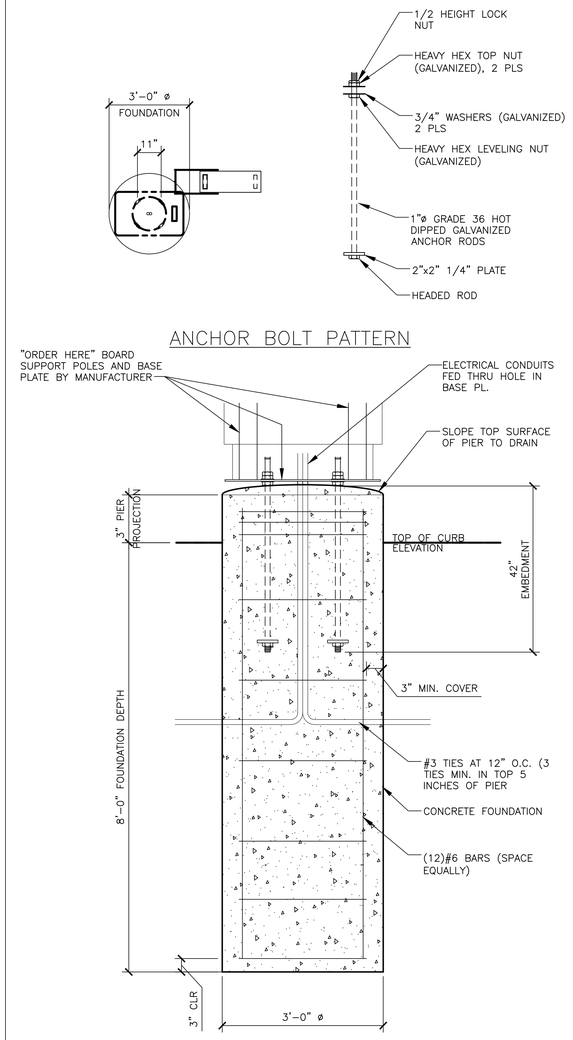

3 S3.3 FOUNDATION FOR "ORDER HERE" BOARD

3/4" = 1'-0"

- SEE SHEET S4.0 FOR FOUNDATION, CONCRETE AND STRUCTURAL STEEL GENERAL NOTES
- DESIGN LOADS DERIVED FROM CODES AND FORCES
  - AXIAL – 2600#
  - SHEAR – 2900#
  - MOMENT – 14,500#'
- ALL FOOTING EXCAVATIONS ARE TO BE CLEAR OF WATER AND FOREIGN MATTER BEFORE PLACING CONCRETE
- TOP 6" OF SOIL NEGLECTED IN EMBEDMENT DEPTH CALCULATIONS (EMBEDMENT DEPTHS SHOWN ARE FROM GRADE)
- ELECTRICAL CONTRACTOR TO PROVIDE INFORMATION ON CONDUIT AND ELECTRICAL REQUIREMENTS.
- ALL FOOTINGS SHALL BEAR ON FIRM UNDISTURBED RESIDUAL SOIL AND/OR ENGINEERED EARTH FILL COMPACTED TO 98% OF ITS MAXIMUM DRY DENSITY AS PER ASTM D 698–70 (STANDARD PROCTOR) UNLESS NOTED OTHERWISE.
- TOP OF PIERS SHALL BE SLOPED SUCH THAT MOISTURE CANNOT ACCUMULATE.
- DO NOT PLACE POLES ON CONCRETE UNTIL CONCRETE HAS CURED PER MCDONALDS CAST–IN–PLACE CONCRETE SPECIFICATION, SECTION 3.11–E. ERFORMED IN ACCORDANCE WITH AWS D1.1.
- REFER TO SIGN MANUFACTURER DRAWINGS AND INSTRUCTIONS FOR ADDITIONAL INFORMATION.
- ANCHOR RODS, NUTS, AND WASHERS SHALL BE SHIPPED AS AN ASSEMBLY FROM THE SIGN/LIGHTING MANUFACTURER
- DO NOT CUT ANCHOR BOLTS AFTER INSTALLATION OF POLE
- DETAILS AND STRUCTURAL MEMBERS NOT SHOWN DESIGNED BY OTHERS

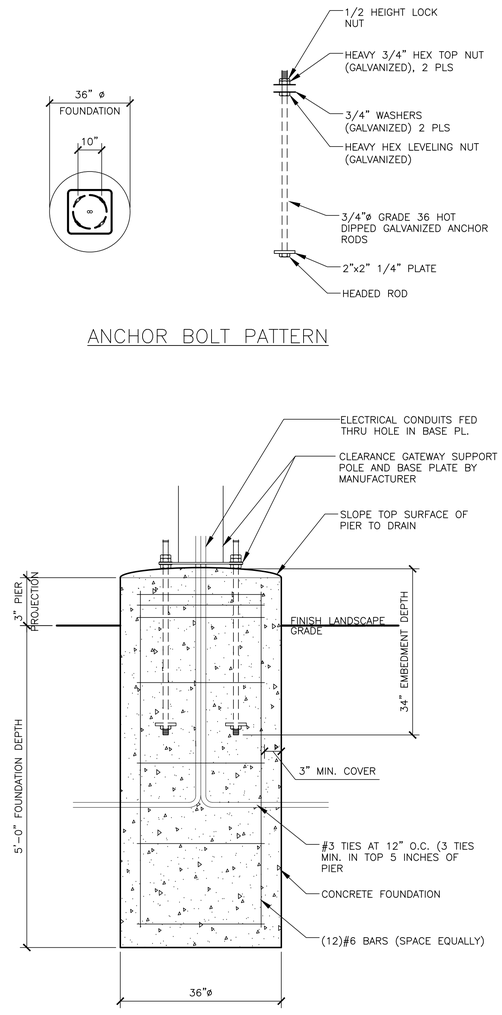

4 S3.3 FOUNDATION FOR CLEARANCE GATEWAY

3/4" = 1'-0"

- SEE SHEET S4.0 FOR FOUNDATION, CONCRETE AND STRUCTURAL STEEL GENERAL NOTES
- DESIGN LOADS DERIVED FROM CODES AND FORCES
  - AXIAL – 790#
  - SHEAR – 600#
  - MOMENT – 5335#'
- ALL FOOTING EXCAVATIONS ARE TO BE CLEAR OF WATER AND FOREIGN MATTER BEFORE PLACING CONCRETE
- TOP 6" OF SOIL NEGLECTED IN EMBEDMENT DEPTH CALCULATIONS (EMBEDMENT DEPTHS SHOWN ARE FROM GRADE)
- ELECTRICAL CONTRACTOR TO PROVIDE INFORMATION ON CONDUIT AND ELECTRICAL REQUIREMENTS.
- ALL FOOTINGS SHALL BEAR ON FIRM UNDISTURBED RESIDUAL SOIL AND/OR ENGINEERED EARTH FILL COMPACTED TO 98% OF ITS MAXIMUM DRY DENSITY AS PER ASTM D 698–70 (STANDARD PROCTOR) UNLESS NOTED OTHERWISE.
- TOP OF PIERS SHALL BE SLOPED SUCH THAT MOISTURE CANNOT ACCUMULATE.
- DO NOT PLACE POLES ON CONCRETE UNTIL CONCRETE HAS CURED PER MCDONALDS CAST–IN–PLACE CONCRETE SPECIFICATION, SECTION 3.11–E. ERFORMED IN ACCORDANCE WITH AWS D1.1.
- REFER TO SIGN MANUFACTURER DRAWINGS AND INSTRUCTIONS FOR ADDITIONAL INFORMATION.
- ANCHOR RODS, NUTS, AND WASHERS SHALL BE SHIPPED AS AN ASSEMBLY FROM THE SIGN/LIGHTING MANUFACTURER
- DO NOT CUT ANCHOR BOLTS AFTER INSTALLATION OF POLE
- DETAILS AND STRUCTURAL MEMBERS NOT SHOWN DESIGNED BY OTHERS

REV	DATE	DESCRIPTION

rubix consultants
www.rubixc.com
Rubix Consultants, LLC
4103 N. Southport Ave,
Chicago, IL 60613
(312) 602 5411
FL Firm Reg No. 35923

STATE OF TEXAS
ASHIF PANAKKAT
101398
LICENSED PROFESSIONAL ENGINEER

Signed/Sealed:
10/09/2024

McDonald's USA, LLC

These drawings and specifications are the confidential and proprietary property of McDonald's USA, LLC and shall not be copied or reproduced without written authorization. The contract documents were prepared for use on the specific site in conjunction with its issue date and are not suitable for use at any other location or at a subsequent date. Reuse of these drawings for reference or example on another project requires the services of properly registered architect and engineer. Reproduction of the contract documents for reuse on another project is not authorized.

DRAWN BY MKP
STD ISSUE DATE 2024
REVIEWED BY AP
DATE ISSUED 10/11/2024

TITLE: 2024 STANDARD BUILDING – BB20 4584–WOOD/WOOD
DESCRIPTION: WOOD BEARING WALLS WITH HARDIE SIDING WOOD ROOF TRUSS FRAMING EFS/BRTTV/METAL/HARDIE SIDING EXTERIOR FINISHES
SITE ID: 042–3591
SITE ADDRESS: NWC OF FM 460 & FM 740, FORNEY TEXAS

JAWA 24–0151

SHEET NO. S3.3
SITE ELEMENTS DETAILS

LIGHT POLE BASE NOTES

- SEE SHEET S4.0 FOR STRUCTURAL GENERAL NOTES
- DESIGN CRITERIA:
  - AASHTO "STANDARD SPECIFICATIONS FOR STRUCTURAL SUPPORTS FOR HIGHWAY SIGNS, LUMINAIRES AND TRAFFIC SIGNALS, FIFTH EDITION, 2009
- FOUNDATION DESIGN PARAMETERS:
  - MAXIMUM LIGHT POLE BASE REACTIONS:
  - BASE MOMENT = 16,845 lbs–ft
  - BASE SHEAR = 978 lbs
- 6" MAXIMUM DEPTH OF DISTURBED SOIL OR TOP SOIL
- THIS FOUNDATION DESIGN SHALL NOT BE USED IN LOCATIONS WHICH ARE CLOSER THAN 8ft FROM A RETAINING WALL.
- THIS FOUNDATION DESIGN SHALL NOT BE USED AT LOCATIONS WHERE THE GROUND SLOPE EXCEEDS 4 inches per foot.

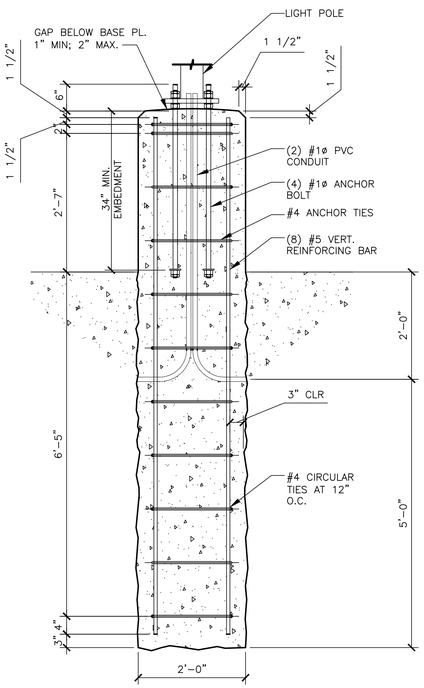

PIER SECTION DETAIL

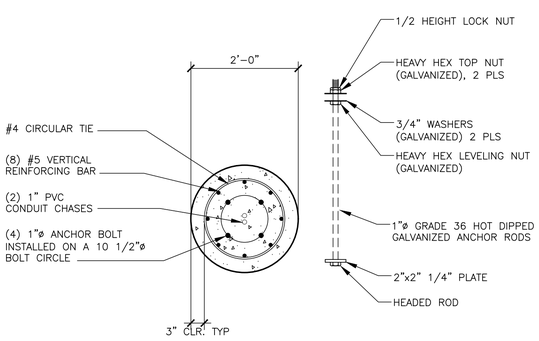

ANCHOR BOLT PATTERN

1 / S3.4 FOUNDATION FOR LIGHT POLE BASE

3/4" = 1'–0"

- SEE SHEET S4.0 FOR FOUNDATION, CONCRETE AND STRUCTURAL STEEL GENERAL NOTES
- DESIGN LOADS DERIVED FROM CODES AND FORCES
  - AXIAL – 180# (DIRECTION)
  - SHEAR – 270# (DIRECTION)
  - MOMENT– 1,010#' (DIRECTION)
- ALL FOOTING EXCAVATIONS ARE TO BE CLEAR OF WATER AND FOREIGN MATTER BEFORE PLACING CONCRETE
- TOP 6" OF SOIL NEGLECTED IN EMBEDMENT DEPTH CALCULATIONS (EMBEDMENT DEPTHS SHOWN ARE FROM GRADE)
- ELECTRICAL CONTRACTOR TO PROVIDE INFORMATION ON CONDUIT AND ELECTRICAL REQUIREMENTS.
- ALL FOOTINGS SHALL BEAR ON FIRM UNDISTURBED RESIDUAL SOIL AND/OR ENGINEERED EARTH FILL COMPACTED TO 98% OF ITS MAXIMUM DRY DENSITY AS PER ASTM D 698–70 (STANDARD PROCTOR) UNLESS NOTED OTHERWISE.
- TOP OF PIERS SHALL BE SLOPED SUCH THAT MOISTURE CANNOT ACCUMULATE.
- DO NOT PLACE POLES ON CONCRETE UNTIL CONCRETE HAS CURED PER MCDONALDS CAST–IN–PLACE CONCRETE SPECIFICATION, SECTION 3.11–E. ERFORMED IN ACCORDANCE WITH AWS D1.1.
- REFER TO SIGN MANUFACTURER DRAWINGS AND INSTRUCTIONS FOR ADDITIONAL INFORMATION.
- ANCHOR RODS, NUTS, AND WASHERS SHALL BE SHIPPED AS AN ASSEMBLY FROM THE SIGN/LIGHTING MANUFACTURER
- DO NOT CUT ANCHOR BOLTS AFTER INSTALLATION OF POLE

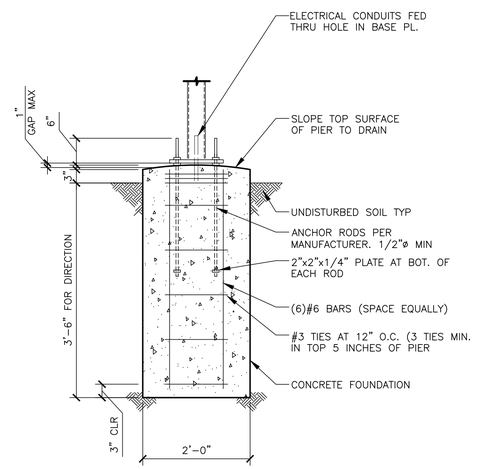

PIER SECTION DETAIL

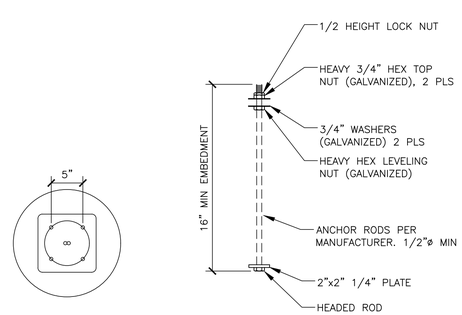

ANCHOR BOLT PATTERN

2 / S3.4 FOUNDATION FOR DIRECTION BOARD

3/4" = 1'–0"

FLAG POLE BASE NOTES

- SEE SHEET S4.0 FOR STRUCTURAL GENERAL NOTES AND DESIGN CODES
- DESIGN CRITERIA:
  - AASHTO "STANDARD SPECIFICATIONS FOR STRUCTURAL SUPPORTS FOR HIGHWAY SIGNS, LUMINAIRES AND TRAFFIC SIGNALS, FIFTH EDITION, 2009
- FOUNDATION DESIGN PARAMETERS:
  - MAXIMUM LIGHT POLE BASE REACTIONS:
  - BASE MOMENT = 33,480 lbs–ft
  - BASE SHEAR = 1682 lbs
- 6" MAXIMUM DEPTH OF DISTURBED SOIL OR TOP SOIL
- THIS FOUNDATION DESIGN SHALL NOT BE USED IN LOCATIONS WHICH ARE CLOSER THAN 8ft FROM A RETAINING WALL.
- THIS FOUNDATION DESIGN SHALL NOT BE USED AT LOCATIONS WHERE THE GROUND SLOPE EXCEEDS 4 inches per foot.
- ELECTRICAL CONTRACTOR TO PROVIDE INFORMATION ON CONDUIT AND ELECTRICAL REQUIREMENTS.
- INSTALL SAND AND POLE PER MANUFACTURERS INSTALLATION INSTRUCTIONS.
- SEAL SAND IN FOUNDATION WITH CAULK PER MANUFACTURERS GUIDELINES.
- FLAG SIZES SHALL NOT EXCEED THE FOLLOWING AREA LIMITATIONS:
  - –25'–0" POLE –> 5'–0" x 8'–0" FLAG
  - –30'–0" POLE –> 6'–0" x 10'–0" FLAG
  - –40'–0" POLE –> 8'–0" x 12'–0" FLAG
  - –50'–0" POLE –> 10'–0" X 15'–0" FLAG
- REFER TO FLAG MANUFACTURER DRAWINGS AND INSTRUCTIONS FOR ADDITIONAL INFORMATION INCLUDING INSTALLATION INSTRUCTIONS.

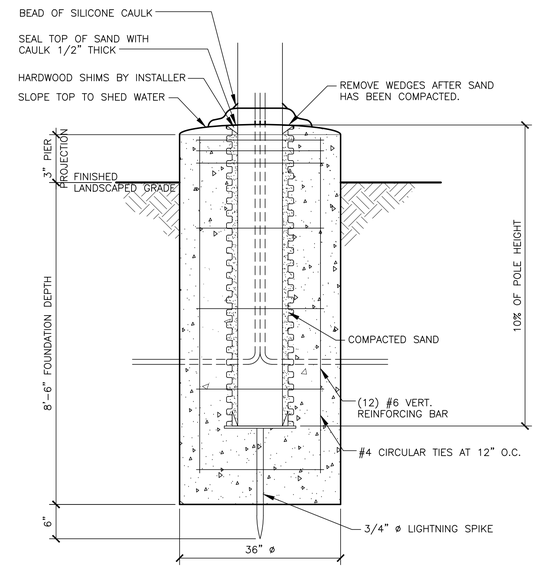

PIER SECTION DETAIL

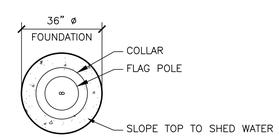

ANCHOR BOLT PATTERN

3 / S3.4 FOUNDATION FOR FLAG POLE BASE

3/4" = 1'–0"

REV	DATE	DESCRIPTION

rubix consultants
www.rubixc.com
Rubix Consultants, LLC
4103 N. Southport Ave.
Chicago, IL 60613
(312) 602 5411
FL Firm Reg No. 35923

STATE OF TEXAS
ASHIF PANAKKAT
101398
LICENSED PROFESSIONAL ENGINEER

Signed/Sealed:
10/09/2024

McDonald's USA, LLC

These drawings and specifications are the confidential and proprietary property of McDonald's USA, LLC and shall not be copied or reproduced without written authorization. The contract documents were prepared for use on this specific site in conjunction with its issue date and are not suitable for use on a different site or at other times. Use of these drawings for reference or example on another project requires the services of properly licensed architects and engineers. Reproduction of the contract documents for re-use on another project is not authorized.

DRAWN BY	MKP
STD ISSUE DATE	2024
REVIEWED BY	AP
DATE ISSUED	10/11/2024

TITLE: 2024 STANDARD BUILDING – BB20 4584–WOOD/WOOD

DESCRIPTION: WOOD BEARING WALLS WITH HARDIE SIDING; WOOD ROOF TRUSS FRAMING; EIFS/BATTEN/METAL/HARDIE SIDING EXTERIOR FINISHES

SITE ID: 042–3591

SITE ADDRESS: NWC OF FM 460 & FM 740, FORNEY TEXAS

JAWA 24–0151

SHEET NO. S3.4

SITE ELEMENTS DETAILS

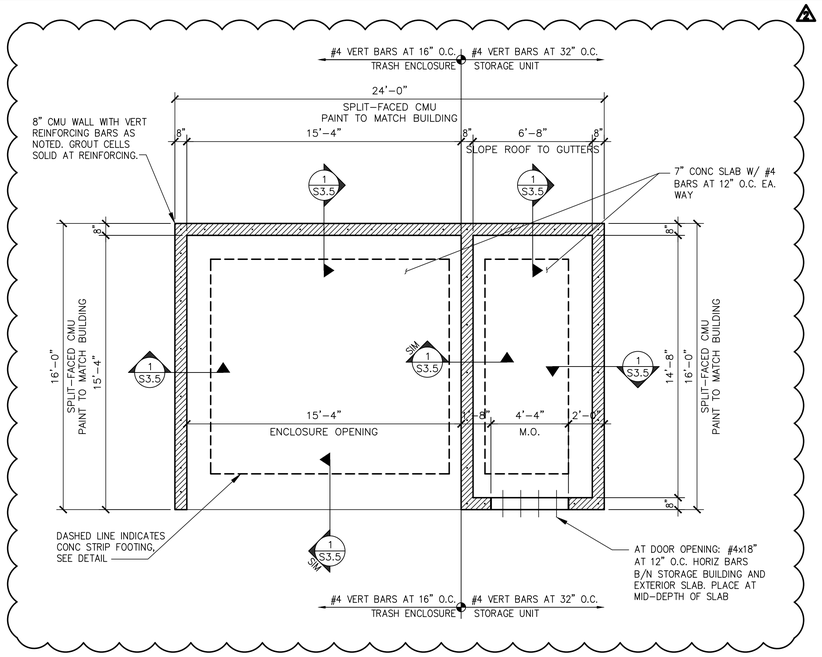

A / S3.5 FOUNDATION PLAN @ TRASH ENCL

N.T.S.

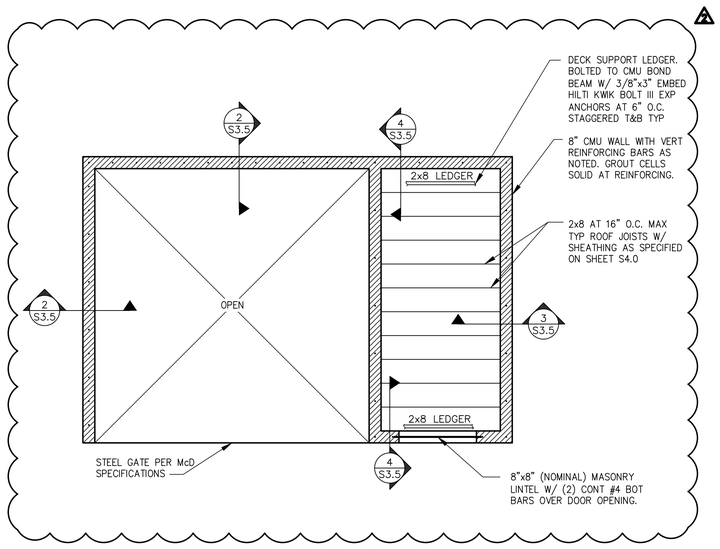

B / S3.5 FRAMING PLAN @ TRASH ENCL

N.T.S.

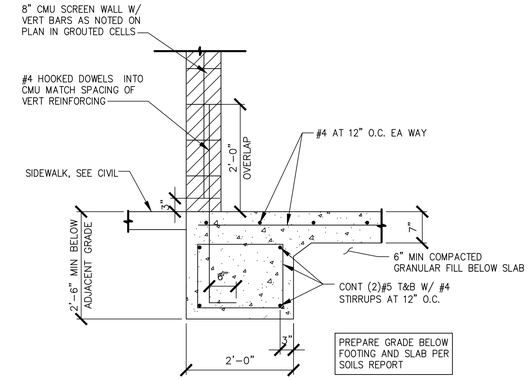

1 / S3.5 FOUNDATION DETAIL

N.T.S.

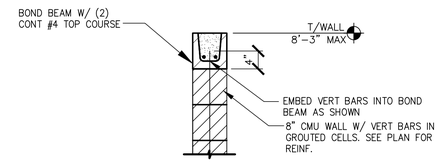

2 / S3.5 TOP OF WALL @ TRASH ENCL

N.T.S.

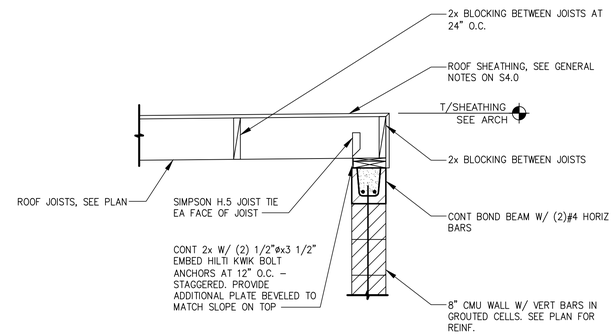

3 / S3.5 TOP OF WALL @ STORAGE BLDG

N.T.S.

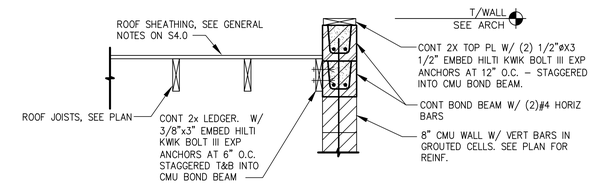

4 / S3.5 SECTION @ STORAGE BLDG

N.T.S.

REV	DATE	DESCRIPTION
1	04/08/2025	COUNTY COMMENTS, M-O OC COMMENTS, & UTILITY COORDINATION
2	05/09/2025	PLAYPLACE ADDITION

rubix consultants
www.rubixc.com
Rubix Consultants, LLC
4103 N. Southport Ave.
Chicago, IL 60613
(312) 602 5411
FL Firm Reg No. 35923

STATE OF TEXAS
ASHIF PANAKKAT
101398
LICENSED PROFESSIONAL ENGINEER

Signed/Sealed: 05/13/2025

McDonald's USA, LLC

These drawings and specifications are the confidential and proprietary property of McDonald's USA, LLC and shall not be copied or reproduced without written authorization. The contract documents were prepared for use on the specific site identified on the cover sheet and are not suitable for use on other sites. The contractor at its sole risk may use these drawings for reference or example on another project requires the services of properly licensed architects and engineers. Reproduction of the contract documents for use on another project is not authorized.

DRAWN BY MKP
STD ISSUE DATE 2024
REVIEWED BY AP
DATE ISSUED 10/11/2024

TITLE
2024 STANDARD BUILDING – BB20
4584–WOOD/WOOD

DESCRIPTION	
WOOD BEARING WALLS WITH HARDIE SIDING	
WOOD ROOF TRUSS FRAMING	
EFS/BATTEN/METAL/HARDIE SIDING EXTERIOR FINISHES	
SITE ID	SITE ADDRESS
042–3591	NWC OF FM 460 & FM 740, FORNEY TEXAS

JAWA 24–0151

SHEET NO. S3.5

TRASH ENCL DETAILS

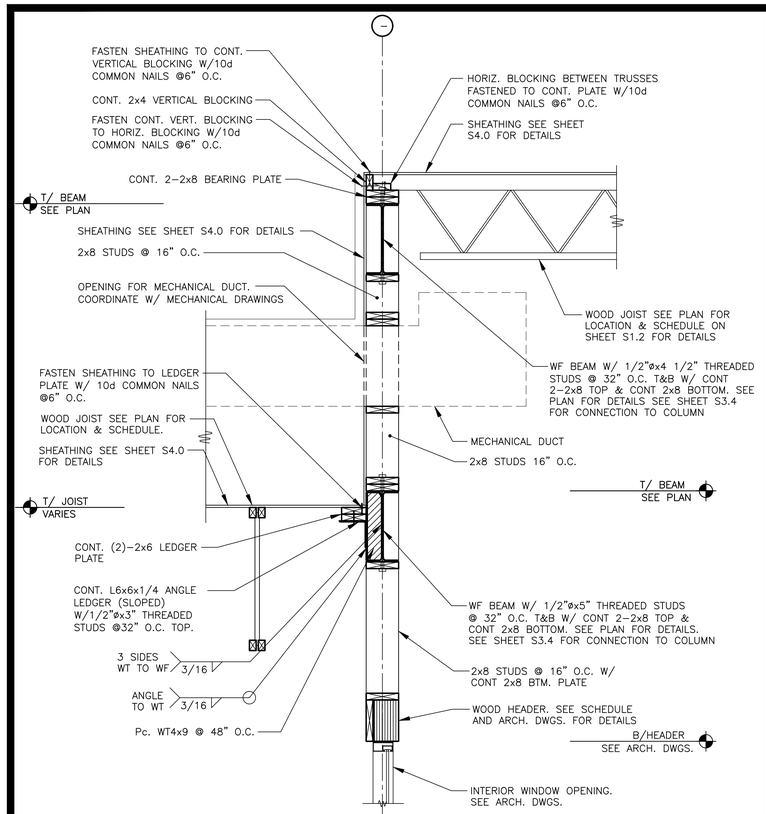

1 S3.6 **SECTION**
3/4" = 1'-0"

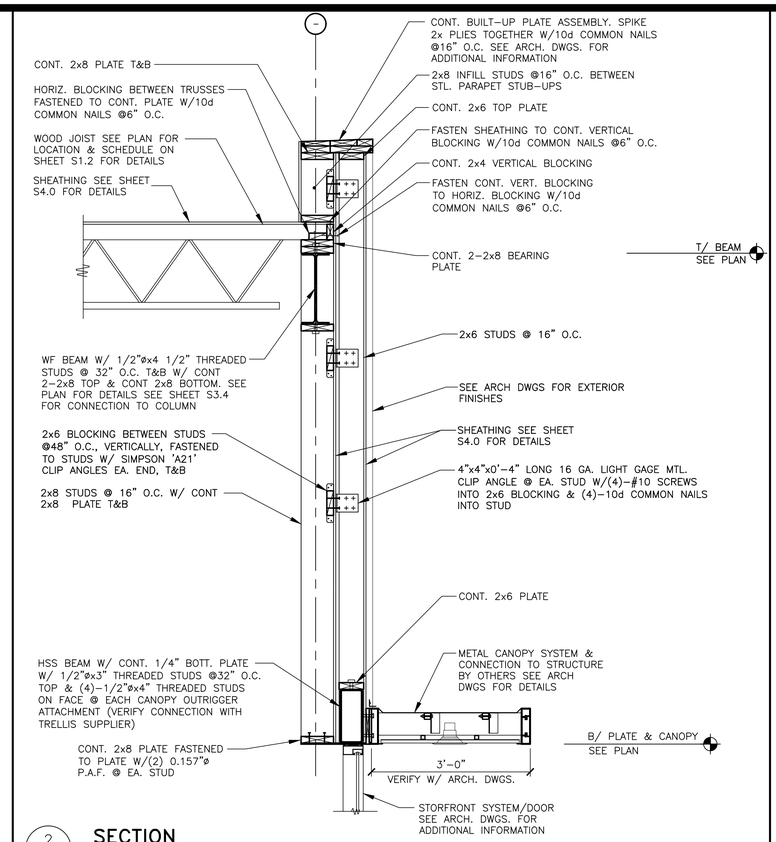

2 S3.6 **SECTION**
3/4" = 1'-0"

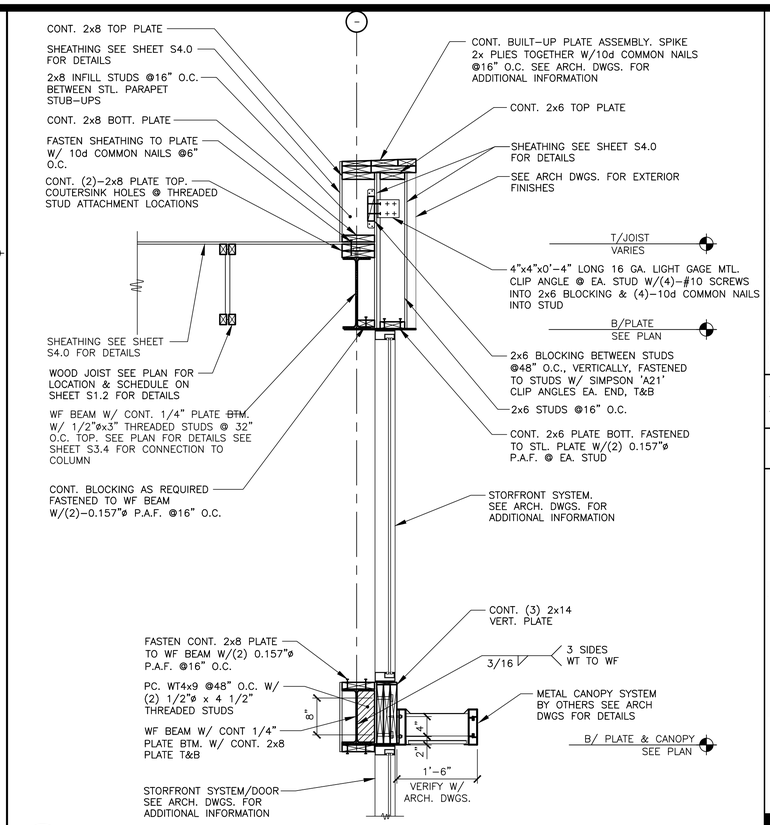

3 S3.6 **SECTION**
3/4" = 1'-0"

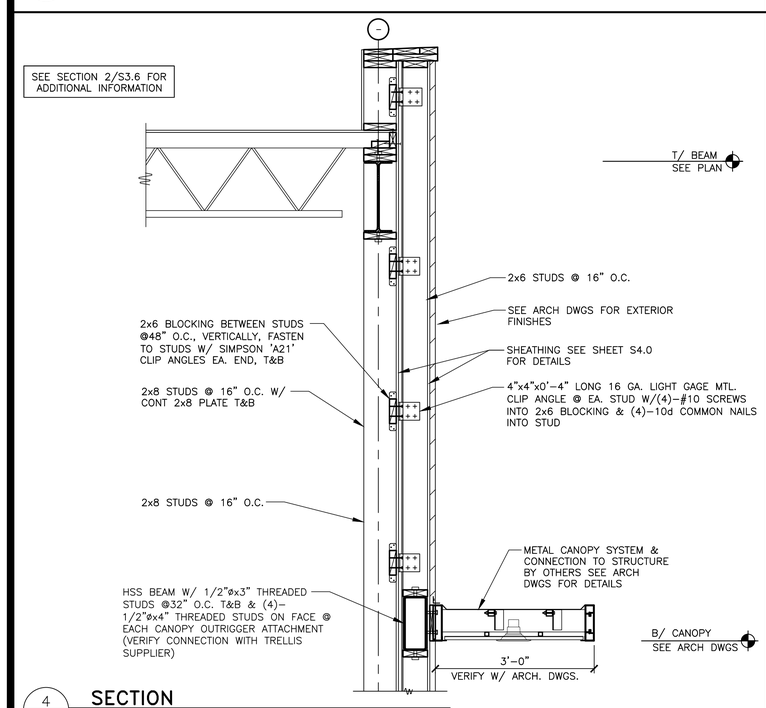

4 S3.6 **SECTION**
1/4" = 1'-0"

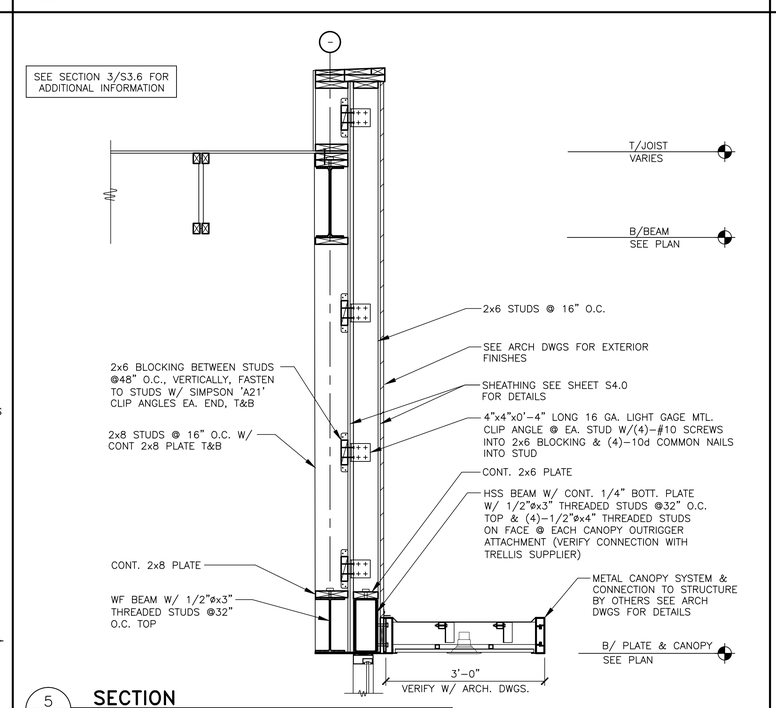

5 S3.6 **SECTION**
1/4" = 1'-0"

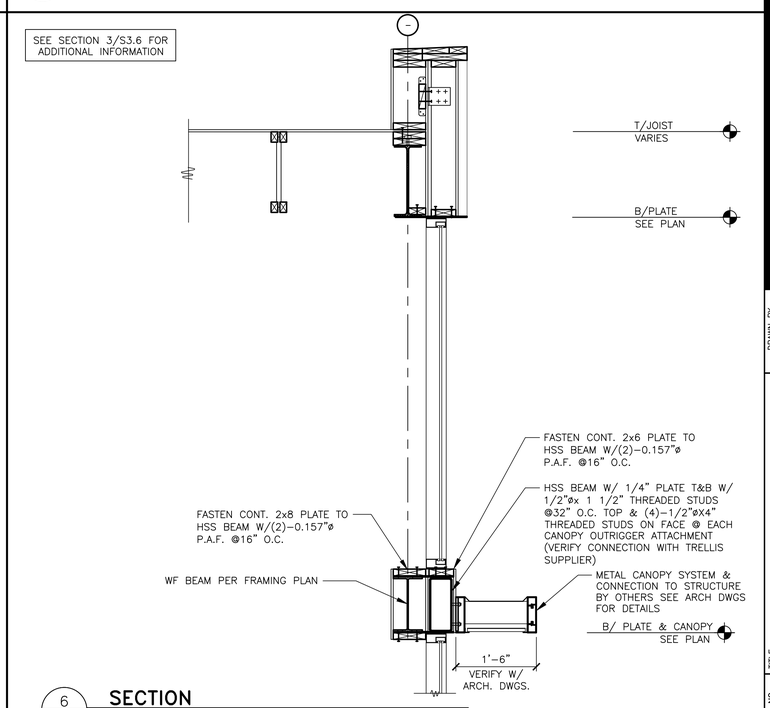

6 S3.6 **SECTION**
1/4" = 1'-0"

REV.	DATE	DESCRIPTION
1	04/08/2025	COUNTY COMMENTS, M/O QC COMMENTS, & UTILITY COORDINATION
2	05/09/2025	PLAYPLACE ADDITION

rubix consultants
www.rubixc.com
Rubix Consultants, LLC
4103 N. Southport Ave.
Chicago, IL 60613
(312) 602 5411
FL Firm Reg No. 35923

STATE OF TEXAS
ASHIF PANAKKAT
101398
LICENSED PROFESSIONAL ENGINEER

Signed/Sealed: 04/12/2025

McDonald's USA, LLC

These drawings and specifications are the confidential and proprietary property of McDonald's USA, LLC and shall not be copied or reproduced without written authorization. The contract documents were prepared for use on the specific site designated on the title block and are intended for use on that site only. Use on another site or as a stand-alone set of these drawings for reference or example on another project requires the services of properly licensed architects and engineers. Reproduction of the contract documents for reuse on another project is not authorized.

DRAWN BY MKP
STD ISSUE DATE 2024
REVIEWED BY AP
DATE ISSUED 10/11/2024

TITLE: 2024 STANDARD BUILDING - BB20
4584-WOOD/WOOD

DESCRIPTION: WOOD BEARING WALLS WITH HARDIE SIDING
WOOD ROOF TRUSS FRAMING
EFS/BATTEN/METAL/HARDIE SIDING EXTERIOR FINISHES

SITE ID: 042-3591
SITE ADDRESS: NWC OF FM 460 & FM 740, FORNEY TEXAS

JAWA 24-0151

SHEET NO. S3.6
PLAY PLACE SECTIONS

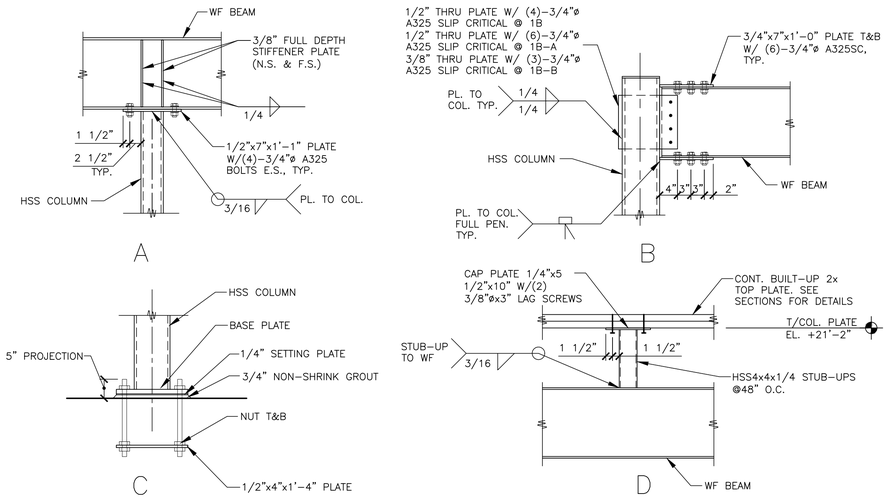

1 / S3.7 **MOMENT FRAME DETAILS**

3/4" = 1'-0"

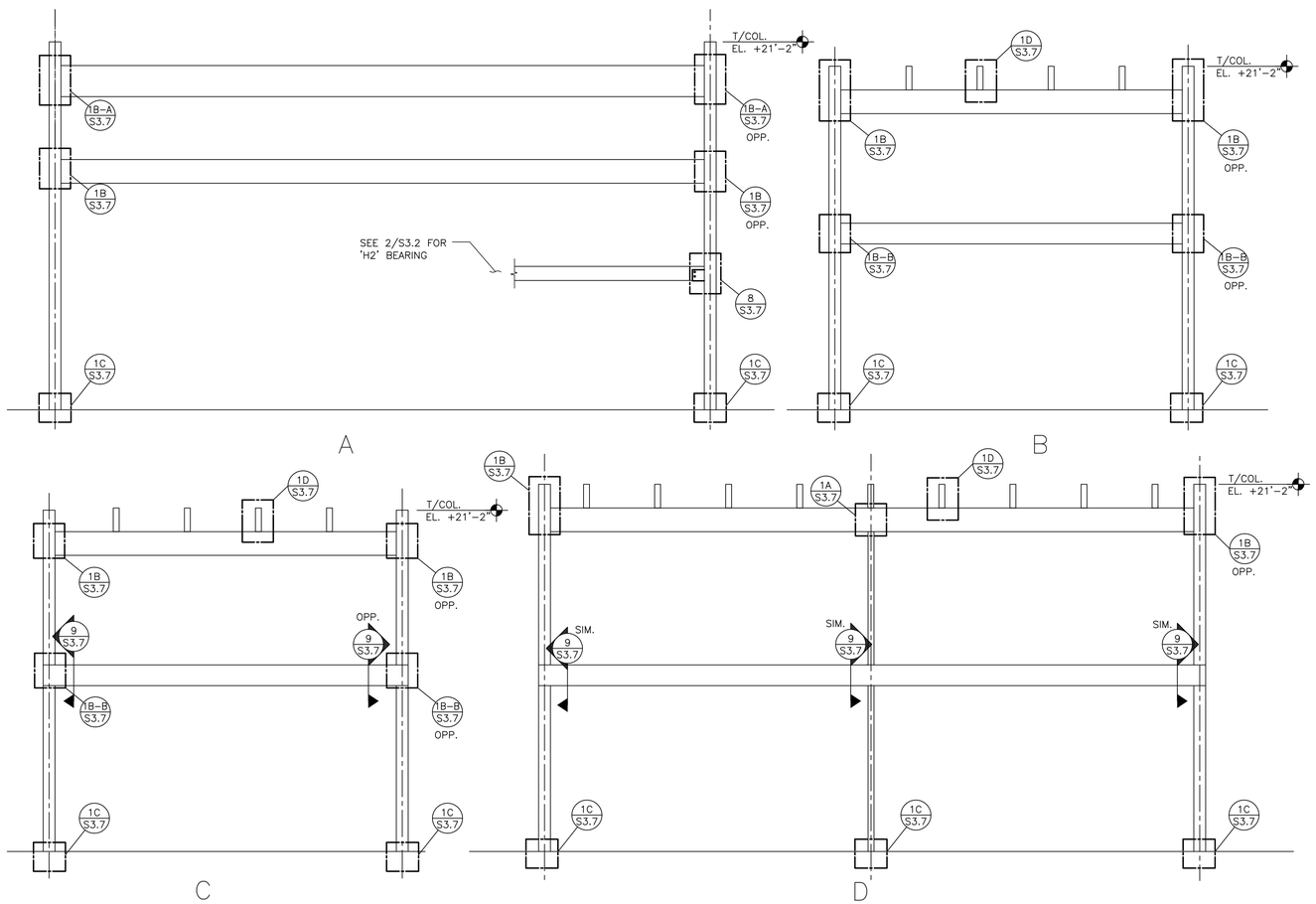

2 / S3.7 **MOMENT FRAME ELEVATIONS**

1/4" = 1'-0"

REV	DATE	DESCRIPTION
1	04/08/2025	COUNTY COMMENTS, M-D QC COMMENTS, & UTILITY COORDINATION
2	05/09/2025	PLAYPLACE ADDITION

rubix consultants
www.rubixc.com
Rubix Consultants, LLC
4103 N. Southport Ave.
Chicago, IL 60613
(312) 602 5411
FL Firm Reg No. 35923

STATE OF TEXAS
ASHIF PANAKKAT
101398
LICENSED PROFESSIONAL ENGINEER

Signed/Sealed: 04/12/2025

McDonald's USA, LLC

These drawings and specifications are the confidential and proprietary property of McDonald's USA, LLC and shall not be copied or reproduced without written authorization. The contract documents were prepared for use on this specific site in conjunction with the issue date and are incomplete without the agreed upon supplementary specifications. Use of these drawings for reference or example on another project requires the services of properly licensed architects and engineers. Reproduction of the contract documents for reuse on another project is not authorized.

DRAWN BY MKP
STD ISSUE DATE 2024
REVIEWED BY AP
DATE ISSUED 10/11/2024

TITLE 2024 STANDARD BUILDING - BB20
4584-WOOD/WOOD

DESCRIPTION
WOOD BEARING WALLS WITH HARDIE SIDING
WOOD ROOF TRUSS FRAMING
EFS/BATTEN/METAL/HARDIE SIDING EXTERIOR FINISHES

SITE ID 042-3591
SITE ADDRESS NWC OF FM 460 & FM 740, FORNEY TEXAS

JAWA 24-0151

SHEET NO. S3.7
STEEL DETAILS

STRUCTURAL GENERAL NOTES:

DESIGN AND LOADING

1. THE STRUCTURAL DESIGN OF THIS BUILDING WAS BASED ON THE DESIGN CRITERIA:
   A. BUILDING CODE: 2024 INTERNATIONAL BUILDING CODE (WITH KAUFMAN COUNTY AMENDMENTS)
   B. FLOOR:
      LIVE LOAD: 100 PSF (NON-REDUCIBLE)
   C. ROOF:
      LIVE LOAD: 20 PSF
      DEAD LOAD: 20 PSF
   D. SNOW:
      GROUND LOAD, p_g: 13 PSF
      FLAT ROOF LOAD, p_f: 10 PSF
      IMPORTANCE FACTOR, I_s: 1.0
      EXPOSURE FACTOR, C_e: 1.0
      THERMAL FACTOR, C_t: 1.0
      SLOPE FACTOR, C_s: 1.0
   E. WIND:
      BASIC DESIGN WIND SPEED (3 SEC GUST), V: 105 MPH
      ALLOWABLE STRESS DESIGN WIND SPEED (3 SEC GUST), V_{ASD}: 90 MPH
      RISK CATEGORY: II
      WIND EXPOSURE: C
      GC_{pi} = ±0.18
      PRESSURES PER ASCE 7-22
   F. SEISMIC:
      RISK CATEGORY: II
      IMPORTANCE FACTOR: 1.00
      SITE CLASS: D
      SS = 0.13, S1= 0.061
      SDS = 0.11, SD1 = 0.086
      DESIGN CATEGORY: B
      PLYWOOD SHEAR WALLS (R = 6.5)
      STEEL SYSTEMS NOT SPECIFICALLY DETAILED FOR SEISMIC RESISTANCE (R = 3.0)
      DESIGN BASE SHEAR = SEE CALCULATIONS
      ANALYSIS PROCEDURE: EQUIVALENT LATERAL FORCE PROCEDURE
   G. FLOOD LOAD: N/A
   H. SPECIAL LOADS: N/A
   I. RAIN LOADS: N/A

FOUNDATION NOTES

1. THE FOUNDATION DESIGN OF THIS BUILDING WAS BASED ON THE FOLLOWING CRITERIA:
   A. MINIMUM ALLOWABLE SOIL BEARING CAPACITY = 1000 PSF
   B. RECOMMENDED BY TERRACON IN THEIR REPORT NO. 94245429, DATED SEPTEMBER 13, 2024.
   C. ANY FILL REQUIRED BELOW SLABS ON GRADE OR FOOTINGS SHALL BE COMPACTED AS REQUIRED BY THE SOILS REPORT.
2. ALL EXTERIOR FOOTINGS SHALL EXTEND BELOW THE MAXIMUM ANTICIPATED DEPTH OF FROST.
3. THE CONTRACTOR SHALL NOTIFY THE ARCHITECT OR ENGINEER OF RECORD IMMEDIATELY IN THE EVENT THAT THE SOILS CONDITIONS ENCOUNTERED VARY FROM THOSE SHOWN ON THE BORING LOGS.
4. ALL FOUNDATION EXCAVATIONS SHALL BE INSPECTED BY A SOILS TESTING LABORATORY PRIOR TO PLACEMENT OF CONCRETE.

CONCRETE AND REINFORCING

1. ALL CONCRETE SHALL BE IN ACCORDANCE WITH THE "AMERICAN CONCRETE INSTITUTE BUILDING CODE" (ACI 318) AND WITH "SPECIFICATIONS FOR STRUCTURAL CONCRETE FOR BUILDINGS" (ACI 301) LATEST EDITIONS.
2. ALL NORMAL WEIGHT CONCRETE (145 PCF) SHALL OBTAIN A MINIMUM 28 DAY COMPRESSIVE STRENGTH OF 3000 PSI (3500 PSI FOR SLABS).
3. ALL CONCRETE SUBJECT TO EXTERIOR EXPOSURE SHALL BE AIR ENTRAINED AS RECOMMENDED BY ACI 318.
4. TEST CYLINDERS SHALL BE MADE AND TESTED AS OUTLINED IN CHAPTER 16 OF ACI-301.
5. REINFORCING BARS SHALL BE DEFORMED BARS OF NEW BILLET STEEL CONFORMING TO ASTM A-615, GRADE 60. WELDED WIRE FABRIC SHALL CONFORM TO ASTM A-185. ALL REINFORCING AND ACCESSORIES SHALL BE DETAILED AND PLACED IN ACCORDANCE WITH ACI STANDARD 315 AND 315R.
6. PROVIDE ALL ACCESSORIES NECESSARY TO SUPPORT REINFORCEMENT AT POSITIONS SHOWN ON THE PLANS AND DETAILS. PLASTIC COATED ACCESSORIES SHALL BE USED IN ALL EXPOSED CONCRETE WORK.
7. THE GENERAL CONTRACTOR SHALL CHECK WITH ARCHITECTURAL, MECHANICAL AND ELECTRICAL DRAWINGS AND THE SUB-CONTRACTORS FOR OPENINGS, SLEEVES, ANCHORS, HANGERS, INSERTS, SLAB DEPRESSIONS AND OTHER ITEMS RELATED TO THE CONCRETE WORK AND SHALL ASSUME RESPONSIBILITY FOR THEIR PROPER LOCATION.

STRUCTURAL STEEL

1. STRUCTURAL STEEL SHALL BE DETAILED, FABRICATED AND ERECTED IN CONFORMANCE WITH THE AISC360 "SPECIFICATION FOR STRUCTURAL STEEL". SEISMIC DESIGN OF STRUCTURAL STEEL STRUCTURES SHALL CONFORM TO AISC 341.
2. STRUCTURAL STEEL SHALL CONFORM TO THE FOLLOWING ASTM SPECIFICATIONS:
   A. ANCHOR RODS F1554, GRADE 36
   B. HIGH STRENGTH STRUCTURAL BOLTS A325-N U.N.O.
   C. STRUCTURAL SHAPES (W) A992
   D. STRUCTURAL SHAPES (M, S, C, MC, PLATES) A36
   E. STRUCTURAL SHAPES (HP) A572
   F. STRUCTURAL TUBING (HSS) A500 GRADE B
   G. STRUCTURAL ANGLES A36
3. ALL WELDING ELECTRODES SHALL BE E70-XX. ALL SHOP AND FIELD WELDING SHALL BE MADE IN ACCORDANCE WITH A.W.S. D1.1 "CODE FOR WELDING IN BUILDING CONSTRUCTION" AND SHALL BE MADE BY CERTIFIED WELDERS.

LAMINATED VENEER LUMBER (LVL)

1. ALL BEAMS SHALL BE MANUFACTURED WITH LAMINATED VENEER LUMBER AND WATERPROOF ADHESIVES.
2. SIZE, MANUFACTURER & SERIES OF ALL LVL MEMBERS SHALL BE AS SHOWN ON DRAWINGS.
3. ANY SUBSTITUTIONS MUST BE APPROVED IN WRITING BY ENGINEER OR ARCHITECT OF RECORD.
4. PROVIDE 3" MINIMUM BEARING OR AS SPECIFIED ON PLANS. REFER TO PLANS FOR FASTENING OF MULTIPLE PIECE BEAMS.

OPEN WEB WOOD JOISTS

1. OPEN WEB WOOD JOISTS SHALL BE MANUFACTURED WITH MACHINE STRESS RATED TOP AND BOTTOM CHORDS. WEBS SHALL BE TUBULAR STEEL MEMBERS PER MANUFACTURERS' SPECIFICATIONS.
2. SIZE, MANUFACTURER & SERIES OF ALL OPEN WEB JOISTS SHALL BE AS SHOWN ON DRAWINGS. ANY SUBSTITUTIONS MUST BE APPROVED IN WRITING BY ENGINEER OR ARCHITECT OF RECORD.
3. PROVIDE 3 1/2" MINIMUM BEARING OR AS SPECIFIED ON PLANS. SHIM AS REQUIRED TO PROVIDE FULL BEARING AND LEVEL SUPPORT.
4. DO NOT CUT TOP OR BOTTOM CHORDS.
5. ALL HANGERS AND FRAMING CONNECTORS SHOWN ARE MANUFACTURED BY SIMPSON STRONG TIE. ANY SUBSTITUTIONS MUST BE APPROVED IN WRITING BY ENGINEER OR ARCHITECT OF RECORD.
6. REFER TO PLANS FOR WEB STIFFENER AND CONCENTRATED LOAD REQUIREMENTS.
7. REFER TO MANUFACTURERS' INSTALLATION GUIDE FOR JOIST BRACING DURING ERECTION. REFER TO MANUFACTURERS' INSTALLATION GUIDE FOR JOIST BRIDGING REQUIREMENTS.

SAWN LUMBER

1. ALL GRADES OF LUMBER INDICATED ON STRUCTURAL DRAWINGS SHALL BE RATED BY THE SOUTHERN PINE INSPECTION BUREAU (SPIB), OR THE WESTERN WOOD PRODUCTS ASSOCIATION (WWPA). LUMBER GRADES SHALL BE AS FOLLOWS, WITH A MAXIMUM MOISTURE CONTENT OF 19%:
   A. SOUTHERN PINE NO. 1.
   B. DOUGLAS FIR-LARCH NO. 1.
   C. HEM-FIR NORTH NO. 1
2. BOLT HEADS AND NUTS BEARING ON WOOD SHALL BE PROVIDED WITH STANDARD CUT WASHERS. ALL WOOD IN CONTACT WITH CONCRETE OR MASONRY SHALL BE PRESSURE TREATED.
3. MINIMUM NAILED CONNECTIONS FOR WOOD FRAMING MEMBERS SHALL BE IN ACCORDANCE WITH THE LOCAL BUILDING CODE OR TABLE 2304.9.1 OF THE INTERNATIONAL BUILDING CODE IF NO OTHER CRITERIA IS GIVEN.
4. CONNECTORS SHOWN ON THE DETAILS ARE MANUFACTURED BY SIMPSON. WRITTEN APPROVAL BY ENGINEER REQUIRED FOR SUBSTITUTIONS.

ROOF & WALL SHEATHING

1. ALL SHEATHING SHALL CONFORM TO AMERICAN PLYWOOD ASSOCIATION (APA) DESIGN SPECIFICATIONS, LATEST EDITION. SHEATHING SHALL BE CONTINUOUS OVER THREE ADJACENT SPANS MINIMUM.
2. WALL SHEATHING SHALL BE 15/32" (1/2" NOMINAL) APA RATED SHEATHING, EXPOSURE 1, 32/16. ALL WALL SHEATHING SHALL BE FASTENED TO SUPPORTING MEMBERS W/ 8d COMMON NAILS @ 6" O.C. AT PANEL EDGES AND 12" O.C. AT INTERMEDIATED SUPPORTS, U.N.O.
3. ROOF SHEATHING SHALL BE 23/32" (3/4" NOMINAL) APA RATED SHEATHING, EXPOSURE 1, 48/24. ALL ROOF SHEATHING SHALL BE FASTENED TO SUPPORTING MEMBERS W/10d COMMON NAILS @ 6" O.C. AT PANEL EDGES, AND 12" O.C. AT INTERMEDIATE SUPPORTS. U.N.O.

MASONRY

CONCRETE BLOCK DESIGN AND CONSTRUCTION SHALL CONFORM TO "BUILDING CODE REQUIREMENTS FOR MASONRY STRUCTURES," TMS 402/ACI 530/ASCE 5 AND "SPECIFICATIONS FOR MASONRY STRUCTURES" (TMS 602/ACI 530.1/ASCE 6)

1. MASONRY MATERIALS SHALL CONFORM TO THE LATEST EDITION OF THE FOLLOWING SPECIFICATIONS:
   A. HOLLOW LOAD BEARING CONCRETE BLOCK: ASTM C-90. MINIMUM COMPRESSIVE STRENGTH = 2800 PSI AT 28 DAYS.
   B. MORTAR: ASTM C-270, TYPE S. MINIMUM COMPRESSIVE STRENGTH = 1800 PSI AT 28 DAYS.
   C. MORTAR: ASTM C-270, TYPE M. MINIMUM COMPRESSIVE STRENGTH = 2500 PSI AT 28 DAYS. (USED FOR BELOW GRADE WORK)
   D. GROUT: ASTM C-476. MINIMUM COMPRESSIVE STRENGTH = 2000 PSI AT 28 DAYS
   E. MASONRY REINFORCEMENT: ASTM A-82 GALVANIZED (JOINT BEDS, TIES)
   F. MASONRY PRISM STRENGTH: F'm = 2000 PSI
2. PRIOR TO DELIVERY OF MASONRY UNITS TO THE JOB SITE, FURNISH TO THE OWNER AFFIDAVITS FROM AN APPROVED TESTING LABORATORY CERTIFYING THAT ALL UNITS CONFORM TO THEIR RESPECTIVE ASTM REQUIREMENTS.
3. GROUT ALL CAVITIES CONTAINING REINFORCEMENT IN LIFTS NOT TO EXCEED 5'-0".
4. LABORATORY PREPARED MIXES SHALL BE PREPARED AND TESTED IN ACCORDANCE WITH ASTM C-270. FIELD MORTAR SHALL BE TESTED BY AN APPROVED TESTING LABORATORY IN ACCORDANCE WITH ASTM C-780 TWO SETS OF THREE MORTAR CUBES SHALL BE TAKEN DIRECTLY FROM THE MIXER FOR EACH DAY OF MASONRY WORK. TEST THE CUBES AT 28 DAYS. ACCEPTANCE OF THE MORTAR SHALL BE AT THE DISCRETION OF THE ENGINEER.
5. CALCIUM CHLORIDE AND/OR ADMIXTURES CONTAINING CALCIUM CHLORIDE SHALL NOT BE INCLUDED IN MORTAR OR GROUT MIX, EXCEPT WHEN APPROVED IN WRITING BY THE STRUCTURAL ENGINEER. NO ANTI FREEZE COMPOUNDS SHALL BE USED TO LOWER THE MORTAR'S FREEZING POINT.
6. NO EXTERIOR MASONRY SHALL BE LAID WHEN THE OUTSIDE AIR TEMPERATURE IS LESS THAN 40 DEGREES FAHRENHEIT, UNLESS THE RECOMMENDATIONS SPECIFIED BY THE BUILDING CODE REQUIREMENTS FOR MASONRY STRUCTURES" TMS 402/ACI 530/ASCE 5 AND "SPECIFICATIONS FOR MASONRY STRUCTURES" (TMS 602/ACI 530.1/ASCE 6) FOR COLD WEATHER CONSTRUCTION ARE STRICTLY FOLLOWED.
7. THE MASONRY CONTRACTOR SHALL PROVIDE BRACING TO WITHSTAND HORIZONTAL PRESSURES AS REQUIRED BY THE BUILDING CODE AND LOCAL ORDINANCE.

LIGHT GAGE METAL FRAMING

1. 16 GA. AND HEAVIER STUDS SHALL HAVE A MINIMUM YIELD STRESS OF 50,000 PSI. 18 GA. AND LIGHTER STUDS AND TRACKS SHALL HAVE A MINIMUM YIELD STRESS OF 33,000 PSI.
2. STUDS AND TRACKS SHALL BE 18 GA. MINIMUM U.N.O. THEY SHALL BE MANUFACTURED BY DIETRICH INDUSTRIES, INC. OR APPROVED EQUAL.
3. PROVIDE DOUBLE STUDS FOR FULL HEIGHT OF WALL EACH SIDE OF ALL OPENINGS UNLESS OTHERWISE NOTED. WELD STUDS TO EACH OTHER WITH 1 1/2" LONG 1/8" FILLET WELDS AT 12" O.C. EACH SIDE. PROVIDE STUD TRACK AT EACH HEAD AND SILL.
4. REFER TO PLANS AND DETAILS FOR CONNECTION OF STUD WALLS TO FOUNDATION, FLOOR OR ROOF.

SHOP DRAWINGS

1. SHOP DRAWING SUBMITTALS SHALL BE SUBMITTED ELECTRONICALLY.
2. SHOP DRAWINGS SHALL BE REVIEWED BY CONTRACTOR TO VERIFY THAT SUBMITTAL IS COMPLETE PRIOR TO SUBMITTING TO ARCHITECT/ENGINEER.
3. DRAWINGS CREATED BY THE ENGINEER OF RECORD CANNOT BE REPRODUCED AND/OR USED AS A SHOP DRAWING SUBMITTAL. SHOP DRAWING SUBMITTALS SHALL INCLUDE THE FOLLOWING:
   A. CONCRETE MIX DESIGN
   B. FOUNDATION REINFORCING BARS
   C. STRUCTURAL STEEL
   D. OPEN WEB JOISTS AND CALCULATIONS
   E. ROOF SHEATHING
   F. TRELLIS SYSTEM & CALCULATIONS
   G. LAMINATED VENEER LUMBER (LVL)
   H. SAWN LUMBER AND CONNECTORS

SPECIAL INSPECTIONS

1. SPECIAL INSPECTIONS SHALL BE PERFORMED IN ACCORDANCE WITH SECTION 1705 OF IBC AND THE OWNER SHALL EMPLOY ONE OR MORE SPECIAL INSPECTORS TO PROVIDE INSPECTIONS DURING CONSTRUCTION ON THE TYPES OF WORK LISTED UNDER SECTION 1705. THE FOLLOWING AREAS OF WORK REQUIRE SPECIAL INSPECTIONS IN ACCORDANCE WITH THE LISTED 2024 INTERNATIONAL BUILDING CODE (WITH KAUFMAN COUNTY AMENDMENTS) SECTIONS/LOCATIONS:
   A. SOILS – SECTION 1705.6 PER TABLE 1705.6
   B. CONCRETE – SECTION 1705.3 PER TABLE 1705.3
   C. STEEL – SECTION 1705.2 (SEE AISC 360-16)
   D. WOOD – SECTION 1705.5

MISCELLANEOUS

1. ALL DIMENSIONS ON STRUCTURAL DRAWINGS TO BE CHECKED AGAINST ARCHITECTURAL, MECHANICAL AND ELECTRICAL DRAWINGS BY THE GENERAL CONTRACTOR AND ANY DISCREPANCIES ARE TO BE REPORTED TO THE ARCHITECT IMMEDIATELY.
2. THE CONTRACTOR SHALL ASSUME RESPONSIBILITY, UNRELIEVED BY REVIEW OF SHOP DRAWINGS OR PERIODIC OBSERVATION OF CONSTRUCTION, FOR COMPLIANCE WITH THE CONTRACT DOCUMENTS, FOR FABRICATION PROCESSES AND CONSTRUCTION TECHNIQUES, AND FOR SAFE CONDITIONS ON THE JOB SITE.
3. DO NOT SCALE THE DRAWINGS.

CONCRETE BLOCK JOINT REINFORCEMENT (AT DUMPSTER ENCLOSURE):

ALL CONCRETE BLOCK WALLS TO RECEIVE THE FOLLOWING JOINT REINFORCEMENT:
LADDER TYPE JOINT REINFORCING WITH SIDE AND CROSS RODS WITH WIRE SIZE (W2.8 OR 3/16"ø) SPACED 16" O.C. VERTICALLY. (HOHMANN & BARNARD 220 "SUPER HEAVY DUTY" OR EQUAL) SIMILAR FOR CONCRETE BRICK PRODUCTS.

1 / S4.0 CONCRETE BLOCK JOINT REINFORCEMENT

ALL UTILITY CONNECTIONS IS TO BE COORDINATED WITH CIVIL ENGINEER ON RECORD AND ACM. GC TO VERIFY ANY DISCREPANCIES WITH ARCHITECT, ENGINEERS OF RECORD, AND ACM.

REV	DATE	DESCRIPTION
1	04/08/2025	COUNTY COMMENTS, M/D QC COMMENTS, & UTILITY COORDINATION

rubix consultants
www.rubixc.com
Rubix Consultants, LLC
4103 N. Southport Ave.
Chicago, IL 60613
(312) 602 5411
FL Firm Reg No. 35923

STATE OF TEXAS
ASHIF PANAKKAT
101398
LICENSED PROFESSIONAL ENGINEER

Signed/Sealed: 04/04/2025

McDonald's USA, LLC

These drawings and specifications are the confidential and proprietary property of McDonald's USA, LLC and shall not be copied or reproduced without written authorization. The contract documents were prepared for use on the specific site in conjunction with its issue date and are not suitable for use at other locations or at a later date. Re-use of these drawings for reference or example on another project requires the services of properly licensed architects and engineers. Reproduction of the contract documents for reuse on other projects is not authorized.

DRAWN BY: MKP
STD ISSUE DATE: 2024
REVIEWED BY: AP
DATE ISSUED: 10/11/2024

TITLE: 2024 STANDARD BUILDING – BB20
4584-WOOD/WOOD

DESCRIPTION: WOOD BEARING WALLS WITH HARDIE SIDING; WOOD ROOF TRUSS FRAMING; EFS/BRITEV/METAL/HARDIE SIDING EXTERIOR FINISHES

SITE ID: 042-3591
SITE ADDRESS: NWC OF FM 460 & FM 740, FORNEY TEXAS

JAWA 24-0151

SHEET NO. S4.0
STRUCTURAL NOTES

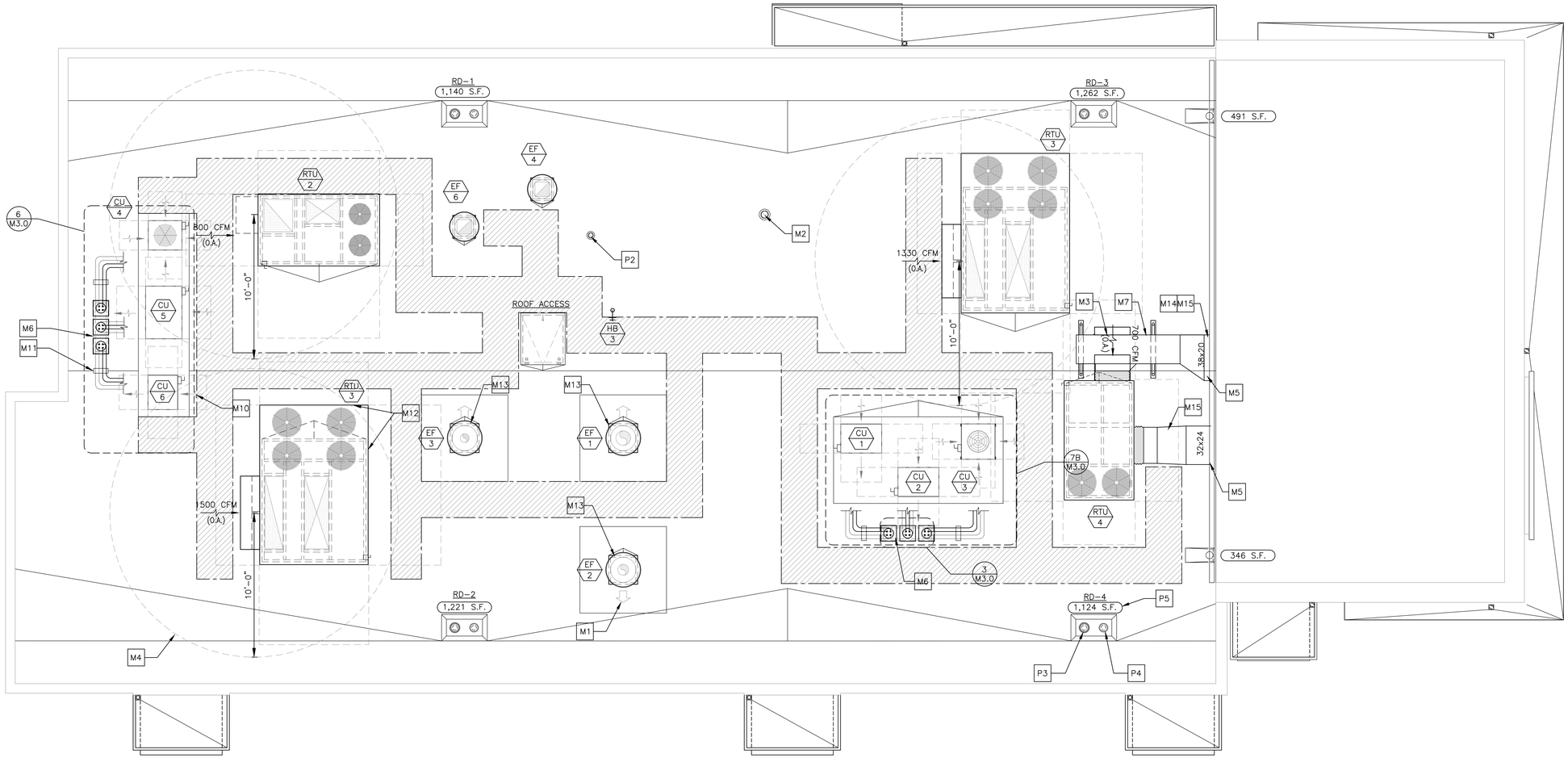

1 M1.0 ROOF PLAN
1/4"=1'-0"

2

CONDENSATE LINE FROM RTUs DOWN THROUGH THE ROOF ON UNITS BASE, TO BE FURNISHED AND INSTALLED BY PC. SEE PLUMBING SHEETS P1.2, P2.1 AND COORDINATION SCHEDULE ON M4.1.

DRAWING NOTES

1. ROOFTOP EQUIPMENT LOCATIONS SHOWN ARE GENERAL. ACTUAL LOCATIONS SHALL BE COORDINATED WITH THE STRUCTURAL DRAWINGS.
2. ROOF OPENINGS FOR ROOFTOP UNITS AND EXHAUST FANS SHALL BE COORDINATED WITH THE MANUFACTURER.
3. ROOF OPENINGS FOR PIPE PORTALS SHALL ONLY BE LARGE ENOUGH TO ALLOW PIPE AND CONDUIT PENETRATIONS. PIPE PORTAL CURB SHALL BE FILLED WITH AS MUCH BATT INSULATION AS POSSIBLE.
4. PRIOR TO INSTALLING THE TOP OF THE EQUIPMENT PLATFORM, INSIDE OF THE PLATFORM SHALL BE INSULATED WITH AS MUCH BATT INSULATION AS POSSIBLE.

KEYED NOTES

- M1 ARROW INDICATES DIRECTION OF EXHAUST FAN HINGE SWING (TYP.)
- M2 6"ø ALUMINUM EXHAUST DUCT FROM EXHAUST FAN (EF-5). PROVIDE PORTALS PLUS PLASTI-FLASH WITH C-126 CAP (OR EQUAL) FOR ROOF PENETRATION. TERMINATE DUCT A MIN. OF 24" ABOVE FINISHED ROOF WITH GOOSENECK.
- M3 FIELD INSTALL BAROMETRIC RELIEF ON RETURN AIR DUCT 2
- M4 MAINTAIN A MINIMUM 10'-0" CLEARANCE FROM EDGE OF OUTLETS AND VENT TERMINALS TO FRESH AIR INTAKES (TYP.)
- M5 PROVIDE EXTERIOR SEALING FOR EXTERIOR DUCTWORK (SEE NOTE 8 ON VENTILATION SYSTEMS, SHEET M4.0). 2
- M6 ROOF PIPE PORTAL FOR CONDENSING UNITS
- M7 TRANSITION RETURN AIR DUCTWORK FROM 38x28 O.D. TO 26x24 O.D.
- M8 TRANSITION SUPPLY AIR DUCTWORK FROM 32x16 O.D. TO 32x24 O.D. 2
- M9 NOT USED.
- M10 ARROW INDICATES DIRECTION OF AIRFLOW FOR CONDENSING OR ROOFTOP UNIT AIR INTAKE (TYP.)
- M11 REFRIGERANT PIPING SUPPORT AS REQUIRED. PROVIDE ROOFTOP BLOX MODEL RTB-01 (OR EQUAL) AND ALL NECESSARY ACCESSORIES FOR PROPER PIPE AND CONDUIT SUPPORT. PROVIDE GALVANIZED PIPE SHIELD TO PROTECT INSULATION AT ALL SUPPORTS.
- M12 PROVIDE HAIL GUARD FOR RTU-1 PROTECTING CONDENSER COIL FROM GREASE.
- M13 EXHAUST FANS WITH WINDBAND EXTENSION TO PREVENT DIRECT GREASE BLOW ONTO CONDENSER COIL OF UNIT RTU-1.
- M14 SLOPE HORIZONTAL DUCTWORK AWAY FROM WALL PENETRATION MIN. ⅛" PER FOOT
- M15 PROVIDE EXTERIOR WEATHERPROOFING FOR EXTERIOR DUCTWORK (SEE DETAIL 4/M3.0 ON DRAWING M3.0), AND NOTE 10 ON VENTILATION SYSTEMS, SHEET M4.0. 2
- P1 NOT USED
- P2 PLUMBING VENT THROUGH ROOF (SEE PLUMBING DRAWINGS). PROVIDE PORTALS PLUS PLASTI-FLASH WITH C-126 CAP (OR EQUAL) FOR ROOF PENETRATION.
- P3 PRIMARY ROOF DRAIN WITH DOME STRAINER (TYP). (SEE PLUMBING DRAWINGS)
- P4 OVERFLOW ROOF DRAIN WITH DOME STRAINER (TYP). (SEE PLUMBING DRAWINGS)
- P5 AREA OF ROOF SERVED BY ROOF DRAIN (TYP.)

PIPE PORTAL SCHEDULE

MANUFACTURER	CURB DIMENSIONS	CURB TYPE	CAP TYPE (QTY)	SERVES
RPS	43"x12"x13"H	RC-2A	N18 (3)	CU-1 THROUGH CU-6

SEQUENCE OF OPERATION

THERMOSTAT SETTINGS

MODE	FAN	SETPOINTS COOLING	SETPOINTS HEATING
OCCUPIED	ON	75°F	70°F
UNOCCUPIED	AUTO	90°F	55°F
HUMIDITY			
HUMIDITY SETPOINT (FOR DEHUMIDIFICATION UNITS ONLY)		60%	

RTU-1, RTU-2 & RTU-3:

1. OCCUPIED MODE SHALL BEGIN AS FOLLOWS:
   - RTU-1: 1.5 HOURS BEFORE OPEN
   - RTU-2: 1 HOUR BEFORE OPEN
   - RTU-3: 30 MINUTES BEFORE OPEN
2. ROOFTOP UNIT FAN SHALL RUN CONTINUOUSLY DURING OCCUPIED MODE
3. ECONOMIZER SHALL BE OPEN DURING OCCUPIED MODE (OUTDOOR AIR THROUGH ROOFTOP UNITS SERVES AS MAKE-UP AIR FOR THE KITCHEN EXHAUST SYSTEM) – REFER TO E3.2 FOR HOOD/FAN INTERLOCK DETAILS.
4. UNOCCUPIED MODE SHALL BEGIN ONE (1) HOUR AFTER STORE CLOSES
5. DURING UNOCCUPIED MODE, ECONOMIZER IS CLOSED AND HEATING, COOLING AND FAN OPERATE IN AUTO MODE (ON DEMAND)
6. RTU-2 SHALL BE INTERLOCKED WITH EF-6. UPON ACTIVATION OF EF-6, RTU-2 SHALL INCREASE SUPPLY AND OUTSIDE AIR BY 600 CFM, WHILE MAINTAINING 1500 CFM RETURN AIR. COORDINATE WITH E.C. AND BAS SUPPLIER.

REV	DATE	DESCRIPTION	BY
1	04/08/2025	COUNTY COMMENTS, M&O QC COMMENTS, & UTILITY COORDINATION	
2	05/09/2025	PLAYPLACE ADDITION	

Robert D. Anderson ,Inc.
MEP Engineering & Design Consultants
HVAC/Illumination/Plumbing/Power Distribution/Controls

Robert D. Anderson
4403 Zion Rd.
Garland ,TX 75043

voice: 972-814-7324
email: robert.d.anderson@sbcglobal.net
contact: Mark Swanson-Project Manager
voice: 817-556-0986
email: mark@mepdesigntx.com

DRAWING IS DIAGRAMMATIC AND AS SUCH ADJUSTMENTS FOR UNKNOWN DESIGN CONDITIONS MAY BE REQUIRED. THIS DRAWING WAS PREPARED FOR SPECIFIC USE ON THE DATE AND SITE INDICATED HEREON. ANY USE OF THIS DRAWING ON ANOTHER SITE OR FOR ANOTHER PROJECT REQUIRES THE SERVICES OF THE ENGINEER. DRAWINGS ARE SUBJECT TO COPYRIGHT AND MAY NOT BE REPRODUCED, DISTRIBUTED, PUBLISHED OR USED IN ANY WAY WITHOUT THE EXPRESS WRITTEN CONSENT OF ROBERT D. ANDERSON, P.E.

STATE OF TEXAS
ROBERT D. ANDERSON
44987
PROFESSIONAL ENGINEER
Robert D. Anderson 05/12/25
Firm No. F-5324

PREPARED FOR:
McDonald's USA, LLC

© 2024 McDonald's USA, LLC
These drawings and specifications are the confidential and proprietary property of McDonald's USA, LLC and shall not be copied or reproduced without written authorization. The contract documents were prepared for use on this specific site for construction. Any issues date and are not suitable for use on a different site or at a later date. Use of these drawings for reference or example on another project requires the services of properly licensed architects and engineers. Reproduction of the contract documents for reuse on another project is not authorized.

DRAWN BY: MES
STD ISSUE DATE: 2024
REVIEWED BY: JAW
DATE ISSUED: 10/11/2024

TITLE: 2024 STANDARD BUILDING – BB20
4584-WOOD/WOOD

DESCRIPTION: WOOD BEARING WALLS WITH HARDIE SIDING
WOOD ROOF TRUSS FRAMING
EIFS/BATTEN/METAL/HARDIE SIDING EXTERIOR FINISHES

SITE ID: 042-3591
SITE ADDRESS: NWC OF FM 460 & FM 740, FORNEY TEXAS

SHEET NO.
JAWA 24-0151
M1.0
ROOF PLAN

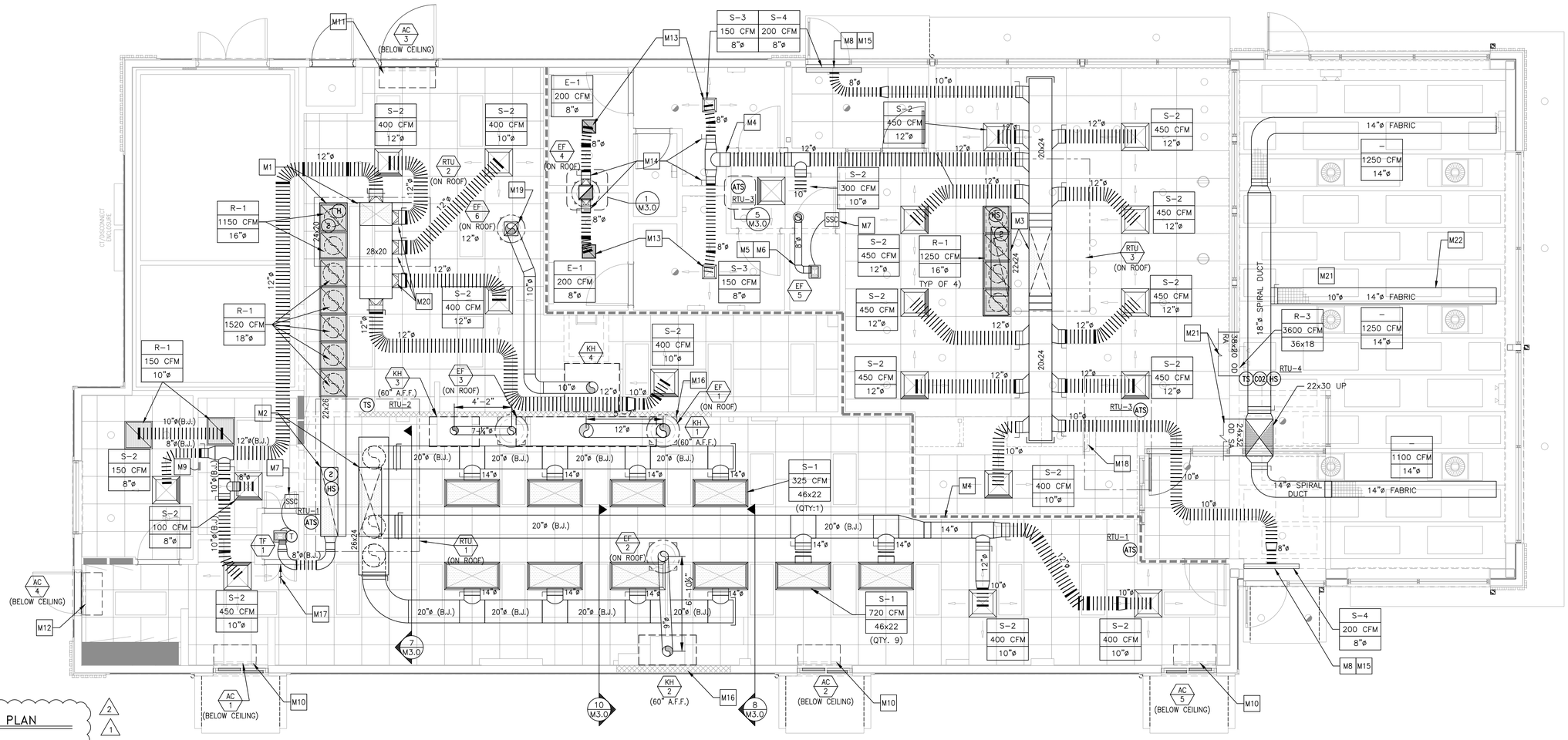

1 M1.2 DUCTWORK PLAN
1/4"=1'-0"

DRAWING NOTES

1. ALL DUCTWORK SHALL BE RUN BETWEEN OR THROUGH THE JOISTS UNLESS NOTED OTHERWISE. DUCTWORK DESIGNATED WITH (B.J.) SHALL BE RUN BELOW THE JOISTS.
2. DUCT SIZES SHOWN ARE INTERNAL FREE AREA DIMENSIONS UNLESS NOTED OTHERWISE.
3. ALL SHEET METAL DUCTWORK SHALL BE EXTERNALLY INSULATED. INSULATION IS NOT SHOWN FOR CLARITY. SEE MECHANICAL NOTES FOR INSULATION REQUIREMENTS.
4. CARBON STEEL KITCHEN EXHAUST DUCTWORK SHALL BE EXTERNALLY INSULATED. INSULATION NOT SHOWN FOR CLARITY. SEE MECHANICAL NOTES AND DETAILS FOR INSULATION REQUIREMENTS.
5. RETURN AIRFLOW VOLUME SHOWN ON PLAN IS FOR DUCTWORK SIZING PURPOSES WHEN THE UNIT IS IN RECIRCULATION (UNOCCUPIED) MODE.
6. DIFFUSERS IN DINING ROOM ARE SPECIFIC TO THE DECOR PLAN SHOWN. DIFFERENT CEILING LAYOUTS MAY REQUIRE A DIFFERENT DIFFUSER TYPES, QUANTITIES, LOCATIONS AND FINISHES/COLORS.
7. NO DIFFUSERS OR GRILLES TO BE INSTALLED ABOVE KIOSKS TO AVOID CONFLICTS WITH KIOSK'S CEILING PENETRATIONS FOR CONDUITS

KEYED NOTES

M1	28x20 SUPPLY AND 24x27 RETURN DUCT DROPS FROM ROOFTOP UNIT (RTU-2)
M2	20x60 SUPPLY AND 15x60 RETURN DUCT DROPS FROM ROOFTOP UNIT (RTU-1)
M3	20x60 SUPPLY AND 15x60 RETURN DUCT DROPS FROM ROOFTOP UNIT (RTU-3)
M4	PROVIDE SHEET METAL DUCT AT ALL DRAFTSTOP WALL PENETRATIONS (TYP.)
M5	8"ø ALUMINUM DUCT FROM EXHAUST FAN UP THROUGH ROOF
M6	EXTERNALLY INSULATE EXHAUST DUCT FROM FAN TO ROOF PENETRATION
M7	STEADY STATE SPEED CONTROLLER FOR CEILING MOUNTED EXHAUST FAN. STEADY STATE SPEED CONTROLLER SHALL BE INSTALLED OVER SUSPENDED CEILING FOR ACCESS. DO NOT INSTALL OVER AREAS WITH DRYWALL CEILINGS.
M8	SET DIFFUSER'S (S-5) OUTER SLOT FOR VERTICAL AIR THROW PATTERN AND INNER SLOT FOR HORIZONTAL THROW PATTERN (TYP.)
M9	BUILDING AUTOMATION SYSTEM LOCATION. SEE LIGHTING CONTROL DETAILS ON SHEET E4.1.
M10	MOUNT AIR CURTAIN TIGHT TO CEILING
M11	MOUNT AIR CURTAIN WITH BOTTOM OF UNIT AT TOP OF DOOR FRAME
M12	MOUNT AIR CURTAIN WITH BOTTOM OF UNIT ABOVE DOOR FRAME AND TOP OF SWITCHGEAR TO MEET 3'-0" MINIMUM SWITCHGEAR'S CLEARANCE REQUIREMENT
M13	FOR DIFFUSERS INSTALLED IN DRYWALL CEILINGS, VOLUME DAMPER IS INTEGRAL TO DIFFUSER AND ADJUSTABLE AT FACE OF DIFFUSER (SEE NOTE 18 UNDER "VENTILATION SYSTEMS" ON DRAWING M4.0 AND AIR DEVICE SCHEDULE ON DRAWING M4.1)
M14	FOR DIFFUSERS INSTALLED IN DRYWALL CEILINGS, INSTALL HIGH-EFFICIENCY TAKE-OFFS WITH VOLUME DAMPER IN FULL-OPEN POSITION TO FACILITATE BALANCING AT FACE OF DIFFUSER.
M15	GENERAL CONTRACTOR SHALL PROVIDE ADDITIONAL T-BAR FRAME TO PROPERLY LOCATE DIFFUSER AS SHOWN. AIR STREAM FROM DIFFUSER SHALL COVER ENTIRE DOOR OPENING.
M16	NONCOMBUSTIBLE WALL CONSTRUCTION BEHIND TYPE I KITCHEN HOODS. REFER TO SHEET A1.0 FOR MORE INFORMATION.
M17	ONE INCH DOOR UNDERCUT TRANSFER AIR TO CLOSET (100 CFM)
M18	MECHANICAL CONTRACTOR TO PROVIDE 4x12 LOUVERED RETURN AIR BEHIND EACH RECESSED MENU BOARD. SEE ARCHITECTURAL PLANS, DETAIL 14/A3.1. AND AIR DEVICE SCHEDULE (R-2) ON SHEET M4.1.
M19	10" TYPE 304 STAINLESS STEEL DUCT (BY KES) FROM TYPE II EXHAUST HOOD UP THROUGH ROOF TO EXHAUST FAN. DUCTWORK SHALL BE PITCHED TOWARDS TYPE II EXHAUST HOOD. EXTERNALLY INSULATE EXHAUST DUCT FROM TYPE II EXHAUST HOOD CONNECTION TO ROOF PENETRATION.
M20	PROVIDE ADEQUATE HORIZONTAL SUPPLY DUCT BETWEEN TRUSSES TO ALLOW TAKE-OFFS TO ALIGN WITH CENTER OF TRUSS WEB. VERIFY ALL CONDITIONS IN FIELD.
M21	32x24 O.D. SUPPLY AND 38x20 O.D. RETURN DUCTS FROM ROOFTOP UNIT (RTU-4) SEE DRAWING M1.0 FOR CONTINUATION.
M22	14"ø FABRIC DUCT SYSTEM THROUGH BAR JOISTS (TYP. 3 PLACES). PROVIDE DUCT-SOX SEDONA-XM IN WHITE WITH COMFORT FLOW VENTS AT 15 DEGREES BELOW HORIZONTAL. INSTALL PER MANUFACTURER'S SPECIFICATIONS AND INSTRUCTIONS. REFER TO 1/M4.0 FOR FURTHER DETAILS. FOR PRICING CONTACT DUCT SOX CORP. cap@ductsox.com or 866-382-8769.

2024 IMC SECTION 403.3 - VENTILATION SCHEDULE

UNIT	AREA SERVED	AREA FT² (Az)	CFM / PERSON (Rp)	CFM/FT² (Ra)	PEOPLE / 1000 FT² (Pz)	BREATHING ZONE REQUIRED O/A CFM (Vbz)	Ez*	Ev**	REQUIRED O/A CFM (Vot)***	ACTUAL O/A CFM	REQUIRED EXHAUST CFM	ACTUAL EXHAUST CFM
RTU-1	PRESENTER	20	7.5	0.12	20	5	0.8	1.00	-	-	-	-
	KITCHEN	1000	7.5	0.12	20	270	0.8		-	-	-	-
						275			*231*	*1500*		
RTU-2	SUPPORT	565	5	0.06	2	40	0.8	1.00	-	-	-	-
	MANAGER'S OFFICE	65	5	0.06	5	6	0.8		-	-	-	-
	CREW ROOM	100	5	0.06	5	9	0.8		-	-	-	-
	ORDER	95	7.5	0.12	20	26	0.8		-	-	-	-
						79			*131*	*800*		
RTU-3	DINING	715	7.5	0.18	70	504	0.8	0.95	-	-	-	-
	CUSTOMER SERVICE	115	7.5	0.18	70	81	0.8		-	-	-	-
	VESTIBULE 1	60	-	0.06	-	4	0.8		-	-	-	-
	VESTIBULE 2	60	-	0.06	-	4	0.8		-	-	-	-
	WOMEN'S	135	-	-	-	-	-		-	-	-	-
	MEN'S	120	-	-	-	-	-		-	-	-	-
						592			*566*	*1330*		
EF-1, 2 & 3	KITCHEN	1000	-	0.7	-	-	-	-	-	-	700	2405
EF-4	WOMEN'S	135	-	-	-	-	-	-	-	-	100	200
	MEN'S	120	-	-	-	-	-		-	-	100	200
EF-5	JANITOR'S CLOSET	25	-	-	-	-	-		-	-	-	75
EF-6	WAREWASHER	-	-	-	-	-	-	-	-	-	350	600
									929	*3630*	*900*	*3480*

* ZONE AIR DISTRIBUTION EFFECTIVENESS BASED ON IMC TABLE 403.3.1.1.1.2 FOR CEILING SUPPLY OF WARM AIR 15° F OR MORE ABOVE SPACE TEMPERATURE AND CEILING RETURN.

** VENTILATION SYSTEM EFFICIENCY BASED ON IMC TABLE 403.3.1.1.2.3.2.

*** CORRECTED REQUIRED O/A INTAKE REQUIRED FOR SYSTEM CALCULATED BASED ON IMC SECTION 403.3.1.1.2.3.3.

AIR BALANCE SCHEDULE - MAIN BUILDING

UNIT	SUPPLY AIR	RETURN AIR	OUTDOOR AIR	EXHAUST AIR	PRESSURE
RTU-1	7600	6100	1500		1500
RTU-2	2300	1500	800		800
RTU-3	5000	3670	1330		1330
EF-1				1350	-1350
EF-2				575	-575
EF-3				480	-480
EF-4				400	-400
EF-5				75	-75
EF-6				600	-600
TOTALS	14900	11270	3630	3480	150

AIR BALANCE SCHEDULE - PLAYPLACE

UNIT	SUPPLY AIR	RETURN AIR	OUTDOOR AIR	EXHAUST AIR	PRESSURE
RTU-4	3600	2900	700	0	700
TOTALS	3600	2900	700	0	700

NOTES:

1. BALANCING TOLERANCES ARE AS FOLLOWS:
   HOODS: 0% TO +10%
   OUTDOOR AIR: 0% TO +10%
   SUPPLY AND RETURN AIR DIFFUSERS: -10% TO +10%
   TOILET EXHAUST AIR: -10% TO +10%
2. BALANCE ROOFTOP UNIT SUPPLY AND RETURN AIR PRIOR TO TURNING ON EXHAUST FANS.
3. EXHAUST HOODS SHALL BE BALANCED WITH A 4" VANE ANEMOMETER.
4. RTU BLOWER TO RUN CONTINUOUSLY DURING OCCUPIED HOURS. REFER TO SEQUENCE OF OPERATIONS ON M1.0 AND E3.2 FOR HOOD/FAN INTERLOCK DETAILS.
5. EF-6 DOES NOT RUN CONTINUOUSLY - VALUES SHOWN IN AIR BALANCE SCHEDULE REFLECT OPERATIONAL STATE. WHEN EF-6 IS NOT OPERATIONAL, OUTSIDE AIR AT RTU-2 SHALL BE DECREASED BY 600 CFM ACCORDINGLY. REFER TO M1.0 FOR ADDITIONAL DETAILS OF SEQUENCE OF OPERATIONS AND INTERLOCKING REQUIREMENTS.

REV	DATE	DESCRIPTION	BY
1	04/08/2025	COUNTY COMMENTS, MCD QC COMMENTS, & UTILITY COORDINATION	
2	05/09/2025	PLAYPLACE ADDITION	

Robert D. Anderson ,Inc.
MEP Engineering & Design Consultants
HVAC*Illumination*Plumbing*Power Distribution*Controls

Robert D. Anderson
4403 Zion Rd.
Garland , TX 75043

voice: 972-814-7324
email: robert.d.andersonrdbe@gmail.net
contact: Mark Swanson-Project Manager
voice: 817-556-0986
email: mark@mepdesigntx.com

DRAWING IS DIAGRAMMATIC AND AS SUCH ADJUSTMENTS FOR UNKNOWN FIELD CONDITIONS MAY BE REQUIRED. THIS DRAWING WAS PREPARED FOR SPECIFIC USE ON THE DATE AND SITE INDICATED HEREON. ANY USE OF THIS DRAWING ON OTHER SITES OR FOR OTHER THAN THE PROJECT REQUIRES THE SERVICES OF THE ENGINEER. DRAWINGS ARE SUBJECT TO COPYRIGHT AND MAY NOT BE REPRODUCED, DISTRIBUTED, PUBLISHED OR USED IN ANY WAY WITHOUT THE EXPRESS WRITTEN CONSENT OF ROBERT D. ANDERSON, P.E.

STATE OF TEXAS
ROBERT D. ANDERSON
44987
LICENSED PROFESSIONAL ENGINEER
05/12/25
Firm No. F-5324

© 2024 McDonald's USA, LLC

PREPARED FOR: McDonald's USA, LLC

These drawings and specifications are the confidential and proprietary property of McDonald's USA, LLC and shall not be copied or reproduced without written authorization. The contract documents were prepared for use on this specific site in conjunction with its issue date and are not suitable for reuse on another site or at a later date. Any use of these drawings for reference or example on another project requires the services of properly licensed architects and engineers. Reproduction of the contract documents for reuse on another project is not authorized.

DRAWN BY: MES
STD ISSUE DATE: 2024
REVIEWED BY: JAW
DATE ISSUED: 10/11/2024

TITLE: 2024 STANDARD BUILDING - BB20
4584-WOOD/WOOD

DESCRIPTION:
WOOD BEARING WALLS WITH HARDIE SIDING
WOOD ROOF TRUSS FRAMING
EIFS/BATTEN/METAL/HARDIE SIDING EXTERIOR FINISHES

SITE ID: 042-3591
SITE ADDRESS: NWC OF FM 460 & FM 740, FORNEY TEXAS

JAWA 24-0151

SHEET NO. M1.2
DUCTWORK PLAN

1 / M1.4 MECHANICAL PIPING PLAN
1/4"=1'-0"

DRAWING NOTES

1. NOT USED.
2. REFRIGERANT PIPE SIZES SHALL BE PER MANUFACTURER'S INSTALLATION INSTRUCTIONS.

KEYED NOTES

- M1 NOT USED. 1
- M2 UTILITIES SHALL NOT BE ROUTED ABOVE TECH. CLOSET. OR SWITCHGEAR.
- M3 NOT USED.
- M4 NOT USED.
- M5 NOT USED. 1
- M6 REFRIGERANT LIQUID AND SUCTION LINES UP THROUGH ROOF TO CONDENSING UNITS (TYP. 6 PLACES – SEE DETAIL 3 ON DRAWING M3.0)
- M7 NOT USED.
- M8 NOT USED.
- M9 NOT USED. 1
- M10 REFRIGERANT LINES DOWN TO SODA SYSTEM (MULTIPLEX).

REV	DATE	DESCRIPTION	BY
1	04/08/2025	COUNTY COMMENTS, M&O QC COMMENTS, & UTILITY COORDINATION	
2	05/09/2025	PLAYPLACE ADDITION	

Robert D. Anderson ,Inc.
MEP Engineering & Design Consultants
HVAC*Illumination*Plumbing*Power Distribution*Controls

Robert D. Anderson
4403 Zion Rd.
Garland ,TX 75043

voice: 972-814-7324
email: robert.d.anderson@sbcglobal.net
contact: Mark Swanson-Project Manager
voice: 817-556-0986
email: mark@mepdesignrx.com

DRAWING IS DIAGRAMMATIC, AND AS SUCH ADJUSTMENTS FOR UNKNOWN FIELD CONDITIONS MAY BE REQUIRED. THIS DRAWING WAS PREPARED FOR SPECIFIC USE ON THE DATE AND SITE INDICATED HEREON. ANY USE OF THIS DRAWING ON OTHER SITES OR FOR OTHER THAN THIS PROJECT REQUIRES THE SERVICES OF THE ENGINEER. DRAWINGS ARE SUBJECT TO COPYRIGHT AND MAY NOT BE REPRODUCED, DISTRIBUTED, PUBLISHED OR USED IN ANY WAY WITHOUT THE EXPRESS WRITTEN CONSENT OF ROBERT D. ANDERSON, P.E.

STATE OF TEXAS
ROBERT D. ANDERSON
44987
LICENSED PROFESSIONAL ENGINEER
05/12/25
Firm No. F-5324

PREPARED FOR:
McDonald's USA, LLC
© 2024 McDonald's USA, LLC
These drawings and specifications are the confidential and proprietary property of McDonald's USA, LLC and shall not be copied or reproduced without written authorization. The contract documents were prepared for use on the specific site and under the specifications in effect at the time of issue date, and are suitable for use only on a different site or at a later date if modified as required. These drawings for reference or example on another project requires the services of properly licensed architects and engineers. Reproductions of the contract documents for reuse on another project is not authorized.

DRAWN BY: MES
STD ISSUE DATE: 2024
REVIEWED BY: JAW
DATE ISSUED: 10/11/2024

TITLE: 2024 STANDARD BUILDING – BB20
4584–WOOD/WOOD

DESCRIPTION: WOOD BEARING WALLS WITH HARDIE SIDING
WOOD ROOF TRUSS FRAMING
EIFS/BATTEN/METAL/HARDIE SIDING EXTERIOR FINISHES

SITE ID: 042–3591
SITE ADDRESS: NWC OF FM 460 & FM 740, FORNEY TEXAS

JAWA 24–0151

SHEET NO. M1.4
MECH. PIPING PLAN

HOOD INFORMATION

HOOD NO.	TAG	MODEL	LENGTH	MAX. COOKING TEMP.	APPLIANCE DUTY	DESIGN CFM/ft	TOTAL EXH. CFM	EXHAUST PLENUM RISER(S) WIDTH	LENG.	HEIGHT	DIA.	CFM	VEL.	S.P.	HOOD CONSTRUCTION	HOOD CONFIG. END TO END	ROW
1	DISH	CLASS 2	48"	NA	DISH	150	600			4"	10"	600	1100	-0.25"	304 SS	ALONE	ALONE

HOOD OPTIONS

HOOD NO.	TAG	OPTION
1	DISH	FASCIA PANEL 14.00" HIGH FRONT, LEFT, RIGHT (FASCIA HEIGHT INCREASES FOR TALLER CEILING)

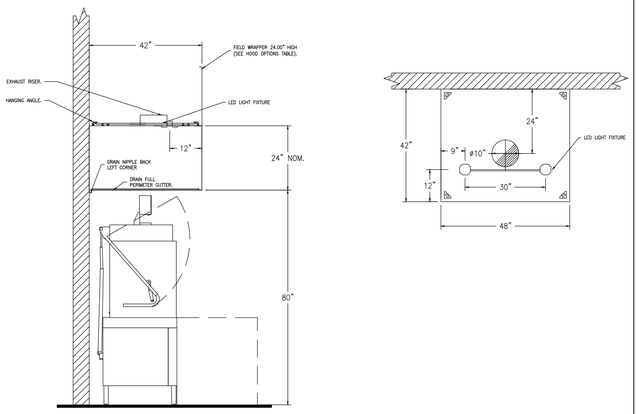

KITCHEN EXHAUST HOOD (TYPE II)

TAG: KH-4 (SEE KITCHEN EXHAUST HOOD SCHEDULE)
N.T.S.

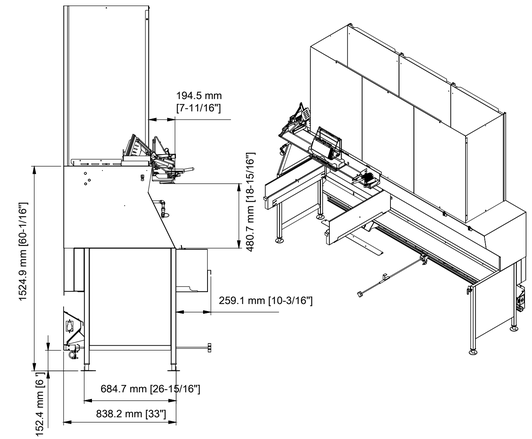

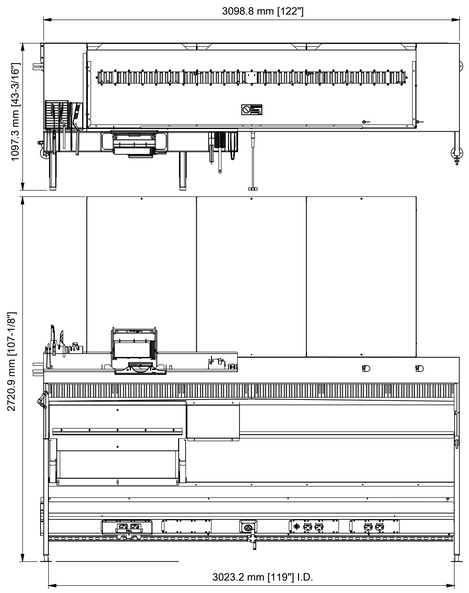

KITCHEN EXHAUST HOOD (TYPE I)

TAG: KH-1 (SEE KITCHEN EXHAUST HOOD SCHEDULE)
SCALE: ½"=1'-0"

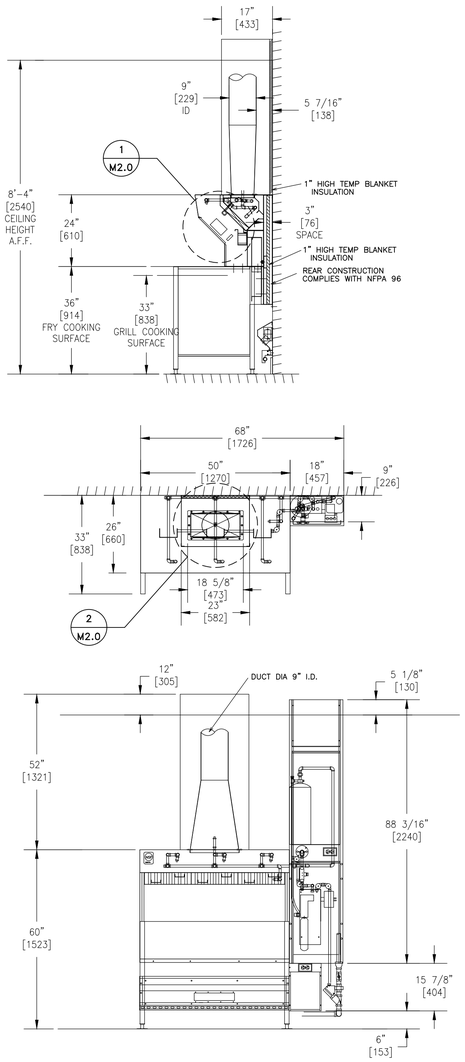

KITCHEN EXHAUST HOOD (TYPE I)

TAG: KH-2 (SEE KITCHEN EXHAUST HOOD SCHEDULE)
SCALE: ½"=1'-0"

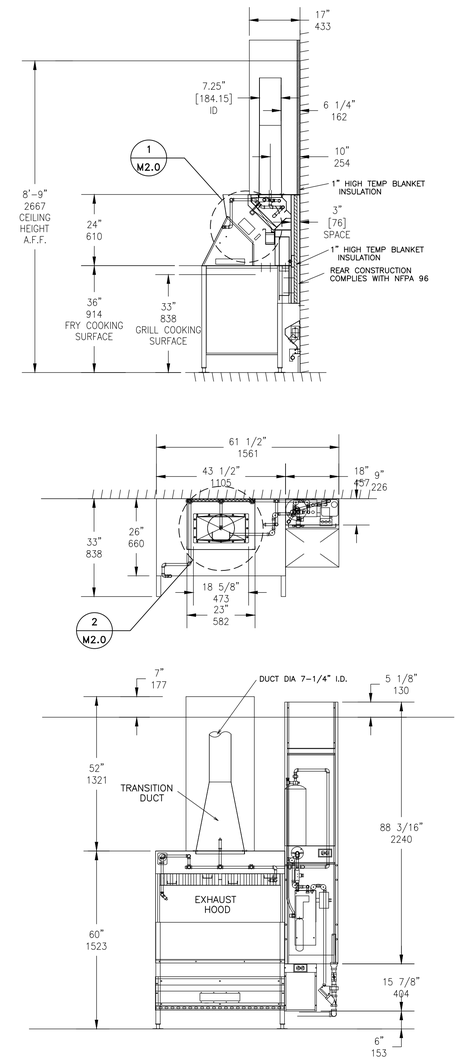

KITCHEN EXHAUST HOOD (TYPE I)

TAG: KH-3 (SEE KITCHEN EXHAUST HOOD SCHEDULE)
SCALE: ½"=1'-0"

DRAWING NOTES

1. 16 GA. STAINLESS STEEL MATERIAL USED FOR HOOD CONSTRUCTION
2. FILTER BAFFLE:
   UL FILE R14372, VOL. 1, SEC. 1
   UL CONTROL NUMBER 5L65
   MEA-446-92-M
3. EXHAUST HOOD:
   UL FILE MH12755, VOL. 4
   UL CONTROL NUMBER 78L1
4. UTILITY CHASE AND RACEWAY:
   UL FILE E163328, VOL.1, SEC.3
5. HIGH TEMP GASKET:
   UL FILE MH12755, VOL. 2, SEC. 1, ILL. 9
6. HOOD CONSTRUCTION COMPLIES WITH NSF STANDARD 2
7. HOOD PERFORMANCE TESTED IN ACCORDANCE WITH UL 710
8. UL 300 AND NFPA 17A COMPLIANT R-102 WET CHEMICAL SYSTEM INCLUDED WITH HOOD INSTALLATION
9. ANSUL CONNECTIONS AND STARTUP BY APPROVED ANSUL REPRESENTATIVE
10. REFER E3.2 FOR HOOD/FAN INTERLOCK DETAILS
11. CAPTURE JET PLENUMS ARE TO BE ATTACHED WHEN CALLED OUT PER KITCHEN SCHEDULE.

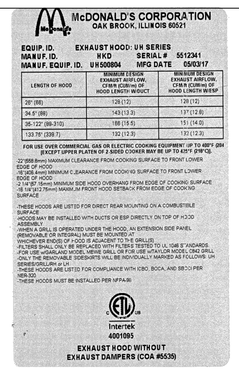

DETAIL 1/M2.0

UL LABEL
SCALE: NONE

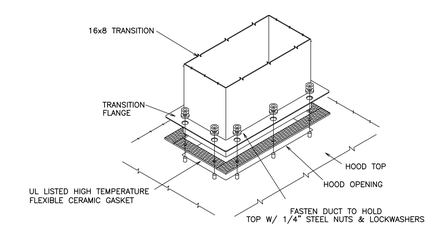

DETAIL 2/M2.0

HOOD CONNECTION
SCALE: NONE

REV	DATE	DESCRIPTION	BY

Robert D. Anderson ,Inc.
MEP Engineering & Design Consultants
HVAC*Illumination*Plumbing*Power Distribution*Controls
Robert D. Anderson
4403 Zion Rd.
Garland , TX 75043
voice: 972-814-7324
email: robert.d.anderson@sbcglobal.net
contact: Mark Swanson-Project Manager
voice: 817-556-0986
email: mark@mepdesignrx.com

DRAWING IS DIAGRAMMATIC AND AS SUCH ADJUSTMENTS FOR UNKNOWN FIELD CONDITIONS MAY BE REQUIRED. THIS DRAWING WAS PREPARED FOR SPECIFIC USE ON THE DATE AND SITE INDICATED HEREON. ANY USE OF THIS DRAWING FOR OTHER PURPOSES OR ON ANOTHER PROJECT REQUIRES THE SERVICES OF THE ENGINEER. DRAWINGS ARE SUBJECT TO COPYRIGHT AND MAY NOT BE REPRODUCED, DISTRIBUTED, PUBLISHED OR USED IN ANY WAY WITHOUT THE EXPRESS WRITTEN CONSENT OF ROBERT D. ANDERSON, P.E.

STATE OF TEXAS
ROBERT D. ANDERSON
44987
LICENSED PROFESSIONAL ENGINEER
09/24/24
Firm No. F-5324

PREPARED FOR:
McDonald's USA, LLC

© 2024 McDonald's USA, LLC
These drawings and specifications are the confidential and proprietary property of McDonald's USA, LLC and shall not be copied or reproduced without written authorization. The contract documents were prepared for use on this specific site in conjunction with its issue date and are not suitable for use on other sites or at other times. Use of these drawings for reference or example on another project requires the services of properly licensed architects and engineers. Modification of the contract documents for reuse on another project is not authorized.

DRAWN BY: MES
STD ISSUE DATE: 2024
REVIEWED BY: JAW
DATE ISSUED: 10/11/2024

TITLE: 2024 STANDARD BUILDING - BB20
4584-WOOD/WOOD

DESCRIPTION:
WOOD BEARING WALLS WITH HARDIE SIDING
WOOD ROOF TRUSS FRAMING
EIFS/BATTEN/METAL/HARDIE SIDING EXTERIOR FINISHES

SITE ID: 042-3591
SITE ADDRESS: NWC OF FM 460 & FM 740, FORNEY TEXAS

JAWA 24-0151

SHEET NO. M2.0
EXHAUST HOODS

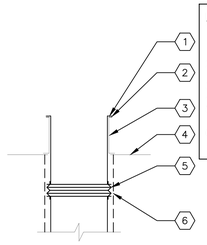

KEYED NOTES:
1. SHEET METAL DUCT DROP (SUPPLY, RETURN OR EXHAUST)
2. FOAM GASKET BETWEEN DUCT AND CURB
3. ROOF CURB
4. ROOF LINE
5. 6" FACE–TO–FACE CANVAS FLEXIBLE CONNECTION
6. 2" EXTERIOR INSULATION (SUPPLY AND RETURN)

DETAIL 1 / M3.0
DUCT DROP INSTALLATION
SCALE: NONE

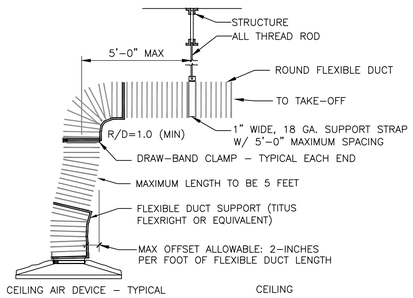

DETAIL 2 / M3.0
DIFFUSER/GRILLE CONNECTION
SCALE: NONE

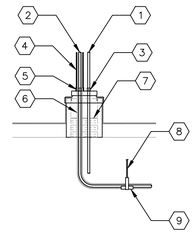

KEYED NOTES:
1. REFRIGERANT LIQUID LINE
2. REFRIGERANT SUCTION LINE WITH 1" THICK EXTERNAL FOAM INSULATION (ARMAFLEX BY ARMACELL OR EQUAL)
3. STAINLESS STEEL CLAMP
4. APPLY WEATHERPROOFING OVER FOAM INSULATION (ALUMAGUARD BY POLYGUARD OR EQUAL)
5. WRAP FOAM INSULATION OVER PIPE PORTAL NIPPLE AND STAINLESS STEEL CLAMP
6. RESTART FOAM INSULATION IMMEDIATELY AFTER PIPE PORTAL PENETRATION
7. INSULATE BOTTOM OF ROOF PORTAL CURB (MIN. R–19)
8. PIPE HANGER
9. LIGHT GAUGE GALVANIZED STEEL PROTECTIVE SHIELD

DETAIL 3 / M3.0
REFRIGERANT PIPE INSTALLATION
SCALE: NONE

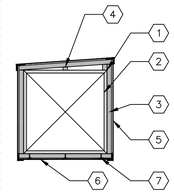

KEYED NOTES:
1. SHEET METAL DUCT (SMACNA SEAL CLASS B)
2. 1" INTERNAL FIBERGLASS INSULATION (MIN. R–4.2)
3. 1½" EXTERIOR POLYURETHANE OR POLYSTYRENE (MIN. R–7.5)
4. PROVIDE POSITIVE DRAINAGE ON TOP OF DUCT (1":12")
5. ALUMAGUARD BY POLYGUARD 60 MIL UV RESISTANT WEATHERPROOFING ON TOP AND SIDES OF DUCT
6. VAPORGUARD BY POLYGUARD 5 MIL VAPOR BARRIER ON BOTTOM OF DUCT
7. INSULATION PINS

DETAIL 4 / M3.0
EXTERIOR DUCT INSTALLATION
SCALE: NONE

2

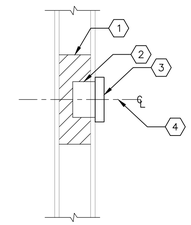

KEYED NOTES:
1. PROVIDE BATT INSULATION FOR TEMPERATURE SENSORS INSTALLED IN HOLLOW CAVITY WALLS
2. 2x4 ELECTRICAL BOX
3. SENSOR (TEMPERATURE, HUMIDITY OR CO2)
4. MOUNT SENSOR(S) BETWEEN 4'–0" TO 4'–6" A.F.F.

DETAIL 5 / M3.0
REMOTE SENSOR INSTALLATION
SCALE: NONE

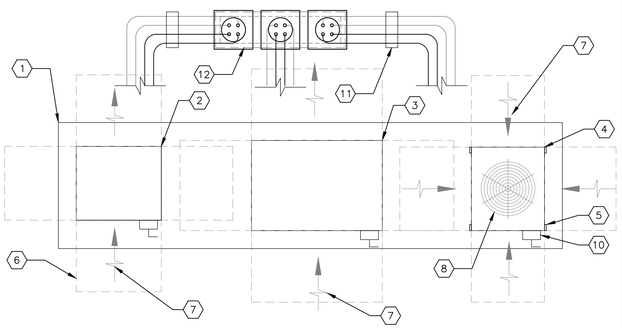

KEYED NOTES:
1. 180"Lx43"Wx14"H EQUIPMENT PLATFORM MANUFACTURED BY RPS OR EQUAL
2. 28½"Lx24¾"Wx19¾"H CONDENSING UNIT (COOLER).
3. 43⅞"Lx30½"Wx29¾"H CONDENSING UNIT (FREEZER).
4. 29"Lx24½"Wx34"H CONDENSING UNIT (MULTIPLEX).
5. FASTEN CONDENSING UNIT TO TOP OF PLATFORM AND SEAL FASTENER PENETRATIONS WITH UV RESISTANT SEALANT
6. OUTLINE OF SERVICE CLEARANCE EXTENDING 3'–0" FROM CONDENSING UNIT ON ALL SIDES
7. CONDENSER AIR INTAKE
8. CONDENSER FAN OUTLET ON TOP OF UNIT
9. CONDENSER FAN OUTLET ON SIDE OF UNIT
10. DISCONNECT SWITCH FURNISHED WITH UNIT
11. PROVIDE PIPE SUPPORT AS REQUIRED (TREATED LUMBER IS NOT ACCEPTABLE)
12. MULTIPLE PIPE PORTAL MANUFACTURED BY RPS OR EQUAL

CONDUIT SIZES: (PER CONDENSING UNIT
(1) ¾" POWER
(1) ¾" CONTROL

REFRIGERANT PIPING SIZES:
SEE MANUFACTURER'S INSTALLATION INSTRUCTIONS FOR RECOMMENDED REFRIGERANT PIPE SIZING

DETAIL 6 / M3.0
REMOTE CONDENSER UNITS (CU–4, CU–5 & CU–6)
SCALE: ½"=1'–0"

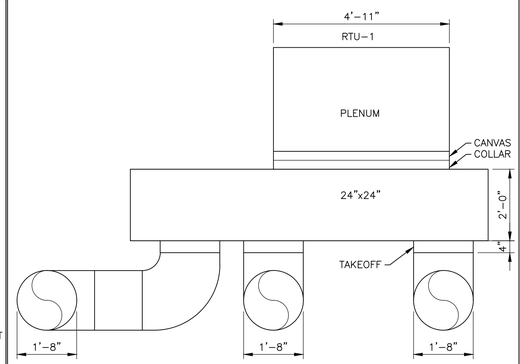

DETAIL 7 / M3.0
VIEW TOWARDS REAR OF KITCHEN AT DUCT DROPS
SCALE: ½"=1'–0"

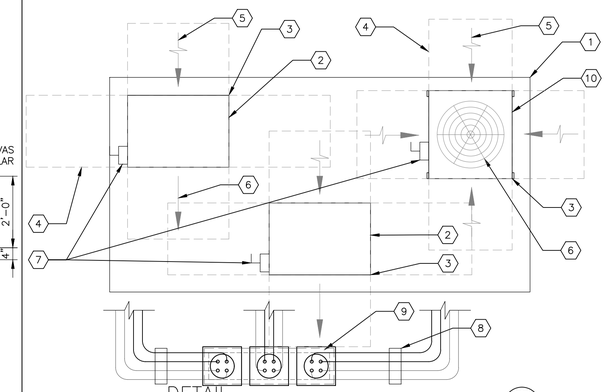

DETAIL 7B / M3.0
REMOTE CONDENSER UNIT (CU–1, CU–2 & CU–3)
SCALE: ½"=1'–0"

KEYED NOTES:
1. 141"x72"x14"H EQUIPMENT PLATFORM MANUFACTURED BY RPS OR EQUAL
2. 34"x24⅛"x25¾"H CONDENSING UNIT
3. FASTEN CONDENSING UNIT TO TOP OF PLATFORM AND SEAL FASTENER PENETRATIONS WITH UV RESISTANT SEALANT
4. OUTLINE OF SERVICE CLEARANCE EXTENDING FROM CONDENSING UNIT ON ALL SIDES
5. CONDENSER AIR INTAKE
6. CONDENSER FAN OUTLET
7. DISCONNECT SWITCH PROVIDED BY ELECTRICAL CONTRACTOR
8. PROVIDE PIPE SUPPORT AS NECESSARY (TREATED LUMBER IS NOT ACCEPTABLE)
9. MULTIPLE PIPE PORTAL MANUFACTURED BY RPS OR EQUAL
10. 29½"x28"x38"H CONDENSING UNIT

CONDUIT SIZES: (PER CONDENSING UNIT)
(1) ¾" POWER
(1) ¾" CONTROL

REFRIGERANT PIPING SIZES:
(PER CONDENSING UNIT)
ICE MACHINE – ½" LIQUID, ¾" SUCTION
(CU–3 CONDENSING UNIT)
ICE MACHINE – ⅜" LIQUID, ½" SUCTION

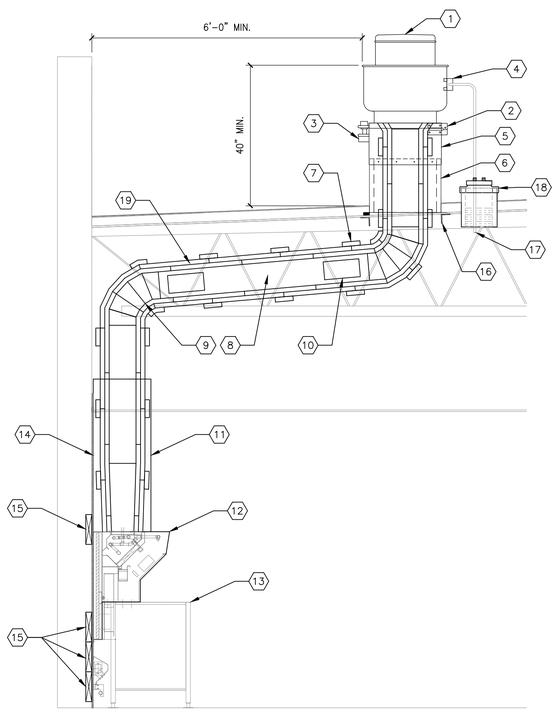

KEYED NOTES:
1. UPBLAST EXHAUST FAN (SEE EXHAUST FAN SCHEDULE)
2. HINGED CURB CAP FOR CLEANING ACCESS (FURNISHED WITH FAN)
3. GREASE TRAP (FURNISHED WITH FAN)
4. NEMA 3R DISCONNECT SWITCH (FURNISHED WITH FAN)
5. 12" HIGH CURB EXTENSION (FURNISHED WITH FAN)
6. 18" HIGH CURB (FURNISHED WITH FAN)
7. TWO (2) LAYERS OF 1½" THICK DUCT WRAP TO MEET ASTM E2336 INSTALLED PER MANUFACTURER'S INSTRUCTIONS (SEE MECHANICAL NOTES FOR INSULATION SPECIFICATION)
8. 16 GAUGE BLACK IRON (CARBON STEEL) OR 18 GAUGE STAINLESS STEEL DUCTWORK WELDED LIQUID–TIGHT
9. 5–GORE BLACK IRON (CARBON STEEL) RADIUS ELBOW
10. 12"x6" ACCESS DOOR AT ALL CHANGES IN DIRECTION
11. STAINLESS STEEL FASCIA PANEL TO PROTECT DUCTWORK AND INSULATION
12. BACKSHELF TYPE EXHAUST HOOD (SEE KITCHEN EXHAUST HOOD SCHEDULE)
13. COOKING APPLIANCE (SEE KITCHEN DRAWINGS)
14. REAR WALL CONSTRUCTION SHALL CONSIST OF CERAMIC TILE OR MIN. 22 GAUGE STAINLESS STEEL OVER ⅝" TYPE X GYPSUM BOARD OR ½" CEMENT BOARD FROM FLOOR TO CEILING AND EXTENDING 24" TO EACH SIDE OF THE HOOD INSTALLED ON NON–COMBUSTIBLE WALL (REFER TO SHEET A1.0 FOR MORE INFORMATION.
15. 2x10 LIGHT GAUGE STEEL FOR SUPPORT BLOCKING FOR HOOD AND RACEWAY (COORDINATE INSTALLATION WITH HOOD INSTALLER)
16. STRUCTURAL FRAMING FOR ROOF OPENING (SEE STRUCTURAL DRAWINGS)
17. TRANSITION TO FLEXIBLE CONDUIT UNDER ROOF PENETRATION WHERE ALLOWED BY CODE.
18. ROOF PIPE PORTAL, RPS–N18(1) RC–2A 12x12x11H.
19. ¼" PER FOOT SLOPE PITCHED BACK TOWARDS THE HOOD.

SECTION 8 / M3.0
KITCHEN EXHAUST HOOD INSTALLATION
SCALE: ½"=1'–0"

KEYED NOTES:
1. OUTLINE OF ROOFTOP UNIT
2. ROOF CURB
3. SUPPLY AND RETURN AIR DUCT DROPS
4. ROOF OPENING

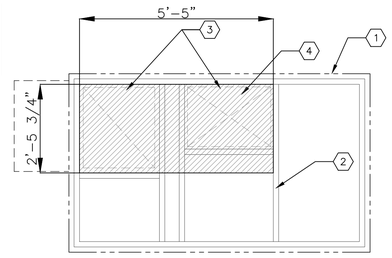

RTU–2 (7.5–TONS)

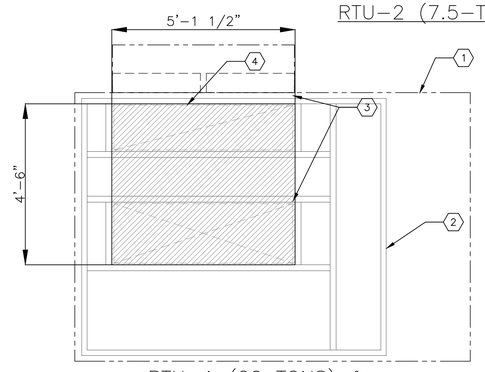

RTU–1 (20 TONS) &
RTU–3 (15–TONS)

DETAIL 9 / M3.0
ROOF OPENINGS
SCALE: ½"=1'–0"

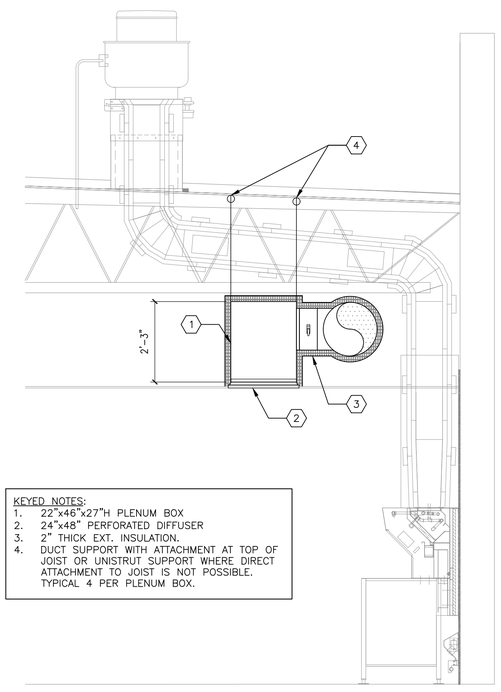

KEYED NOTES:
1. 22"x46"x27"H PLENUM BOX
2. 24"x48" PERFORATED DIFFUSER
3. 2" THICK EXT. INSULATION.
4. DUCT SUPPORT WITH ATTACHMENT AT TOP OF JOIST OR UNISTRUT SUPPORT WHERE DIRECT ATTACHMENT TO JOIST IS NOT POSSIBLE. TYPICAL 4 PER PLENUM BOX.

SECTION 10 / M3.0
SUPPLY (S–1) PLENUM INSTALLATION
SCALE: ½"=1'–0"

REV	DATE	DESCRIPTION	BY
1	04/08/2025	COUNTY COMMENTS, MUD QC COMMENTS, & UTILITY COORDINATION	
2	05/09/2025	PLAYPLACE ADDITION	

Robert D. Anderson ,Inc.
MEP Engineering & Design Consultants
HVAC/Illumination/Plumbing/Power Distribution/Controls

Robert D. Anderson
4403 Zion Rd.
Garland ,TX 75043

voice: 972-814-7324
email: robert.d.andersonrib@gmail.net
contact: Mark Swanson-Project Manager
voice: 817-556-0986
email: mark@mepdesigntx.com

DRAWING IS DIAGRAMMATIC, AND AS SUCH ADJUSTMENTS FOR UNKNOWN FIELD CONDITIONS MAY BE REQUIRED. THIS DRAWING WAS PREPARED FOR SPECIFIC USE ON THE DATE AND SITE INDICATED HEREON. ANY USE OF THIS DRAWING ON OTHER SITES OR ON THIS SITE AT A LATER PERIOD MAY REQUIRE THE SERVICES OF THE ENGINEER. DRAWINGS ARE SUBJECT TO COPYRIGHT AND MAY NOT BE REPRODUCED, DISTRIBUTED, PUBLISHED OR USED IN ANY WAY WITHOUT THE EXPRESS WRITTEN CONSENT OF ROBERT D. ANDERSON, P.E.

ROBERT D. ANDERSON
44987
LICENSED
PROFESSIONAL ENGINEER
06/12/25
Firm No. F-5324

© 2024 McDonald's USA, LLC

PREPARED FOR:
McDonald's USA, LLC

These drawings and specifications are the confidential and proprietary property of McDonald's USA, LLC and shall not be copied or reproduced without written authorization. The contract documents were prepared for use on this specific site. Modifications will be required if these drawings for reference or example on another project requires the services of property licensed architects and engineers. Reproductions of the contract documents for reuse on another project is not authorized.

DRAWN BY: MES
STD ISSUE DATE: 2024
REVIEWED BY: JAW
DATE ISSUED: 10/11/2024

TITLE: 2024 STANDARD BUILDING – BB20
4584–WOOD/WOOD

DESCRIPTION	
WOOD BEARING WALLS WITH HARDIE SIDING	
WOOD ROOF TRUSS FRAMING	
EIFS/BATTEN/METAL/HARDIE SIDING EXTERIOR FINISHES	
SITE ID	SITE ADDRESS
D42–3591	NWC OF FM 460 & FM 740, FORNEY TEXAS

JAWA 24–0151

SHEET NO. M3.0
DETAILS

MECHANICAL NOTES

GENERAL:

1. ALL WORK PERFORMED SHALL BE IN ACCORDANCE WITH ALL LOCAL CODES AND ACCEPTABLE TO THE AUTHORITY HAVING JURISDICTION.
2. ALL DIMENSIONS, CLEARANCES AND TOLERANCES SHALL BE VERIFIED PRIOR TO INSTALLATION.
3. ALL MATERIALS, FIXTURES AND EQUIPMENT USED SHALL BE IN ACCORDANCE WITH McDONALD'S SPECIFICATIONS. SPECIFICATIONS ARE CONTAINED WITHIN THESE DRAWINGS AND THE McDONALD'S PROJECT MANUAL. ANY CONTRACTOR IN NEED OF A COPY OF THE McDONALD'S PROJECT MANUAL SHALL CONTACT THE McDONALD'S AREA CONSTRUCTION MANAGER. ANY VARIANCE FROM THE McDONALD'S SPECIFICATIONS SHALL BE REVIEWED AND APPROVED BY THE ENGINEER-OF-RECORD.
4. ALL EQUIPMENT SHALL BE INSTALLED IN ACCORDANCE WITH ITS LISTING AND/OR THE MANUFACTURER'S INSTALLATION INSTRUCTIONS.
5. SEE COORDINATION SCHEDULE FOR ADDITIONAL SCOPE OF WORK.
6. PRIOR TO BUILDING TURNOVER, A COMPLETE START-UP, TEST, ADJUST AND BALANCE SHALL BE PERFORMED ON ALL MECHANICAL SYSTEMS. THIS WORK SHALL BE PERFORMED BY A CERTIFIED TEST AND BALANCE CONTRACTOR. A CERTIFIED TEST AND BALANCE CONTRACTOR CAN BE FOUND BY VISITING:
   HTTP://WWW.AABCHQ.COM/DIRECTORY
   HTTP://WWW.NEBB.ORG/DIRECTORY.HTM
   HTTP://WWW.TABBCERTIFIED.ORG/SITE/CONTENT/CONTRACTORS/SEARCH
7. UPON COMPLETION OF THE PUNCHLIST, THE MECHANICAL CONTRACTOR AND TEST AND BALANCE CONTRACTOR SHALL SUBMIT REDLINED OR AS-BUILT DRAWINGS ALONG WITH THE TEST AND BALANCE REPORT AND ALL EQUIPMENT OPERATION AND MAINTENANCE MANUALS TO THE McDONALD'S AREA CONSTRUCTION MANAGER. A MINIMUM OF TWO (2) COPIES SHALL BE PROVIDED, ONE (1) FOR REGIONAL RECORDS AND ONE (1) FOR THE RESTAURANT.
8. ALL PENETRATIONS OF FIRE-RATED WALLS SHALL BE FIRESTOPPED WITH AN APPROVED AND LISTED FIRESTOPPING SYSTEM.

VENTILATION SYSTEMS:

1. ALL SHEET METAL DUCTWORK SHALL BE FABRICATED AND INSTALLED IN ACCORDANCE WITH LOCAL CODES AND SMACNA STANDARDS.
2. ALL DUCTWORK DIMENSIONS ARE INTERNAL FREE AREA DIMENSIONS AND SIZED FOR 0.08" W.C. PER 100 FT. OF DUCT.
3. ALL SHEET METAL DUCTWORK SHALL BE CONSTRUCTED IN ACCORDANCE WITH SMACNA TABLES FOR 2" W.C. AND SHALL BE SUPPORTED WITH AN APPROVED HANGER AT INTERVALS NOT EXCEEDING 10 FT.
4. ALL DUCT DROPS INTO THE BUILDING SHALL BE INSTALLED WITH FLEXIBLE CONNECTIONS TO ISOLATE THE DUCTWORK SYSTEM FROM NOISE AND VIBRATION. FLEXIBLE CONNECTIONS SHALL BE TESTED IN ACCORDANCE WITH UL 181 AND LISTED AS CLASS 0 OR CLASS 1.
5. ALL DUCT DROPS INTO THE BUILDING SHALL BE OFFSET AS NECESSARY TO ALLOW FOR THE CLEAR INSTALLATION OF THE EXTERNAL DUCTWORK INSULATION.
6. ALL DUCTWORK BRANCHES THAT SERVE A SINGLE DIFFUSER SHALL BE SUPPLIED WITH A VOLUME DAMPER FOR BALANCING. BRANCHES THAT SERVE MULTIPLE DIFFUSERS, THE BALANCING IS HANDLED VIA REMOTE DAMPER INSTALLED NEAR THE DIFFUSER. REFER TO M1.2 FOR DAMPER LOCATIONS. VOLUME DAMPER SHALL HAVE A 2" OFFSET TO ACCOMMODATE EXTERNAL INSULATION.
7. TAKE-OFFS FROM RECTANGULAR TO ROUND DUCT SHALL BE DUCTMATE STRAIGHT-SIDED OR CENTER HIGH-EFFICIENCY TAKE-OFFS WITH A 2" DAMPER STAND-OFF TO ACCOMMODATE FOR EXTERNAL INSULATION.
8. ALL DUCTWORK JOINTS, LONGITUDINAL AND TRANSVERSE SEAMS SHALL BE SEALED WITH WELDS, GASKETS, MASTICS (ADHESIVES), TAPES, ETC. ALL SEALANT MATERIALS SHALL BE LISTED IN ACCORDANCE WITH UL 181A OR 181B.
9. ALL SUPPLY AND RETURN SHEET METAL DUCTWORK LOCATED WITHIN THE CEILING SPACE SHALL BE EXTERNALLY INSULATED. INSULATION SHALL BE 2" THICK MICROLITE FSK-100 BY JOHNS MANVILLE OR EQUAL.
10. ALL SUPPLY AND RETURN SHEET METAL DUCTWORK LOCATED OUTSIDE OF THE BUILDING SHALL BE INTERNALLY LINED WITH A 1" THICK FIBERGLASS (MIN. R-4.2) AND EXTERNALLY INSULATED WITH A 2" THICK RIGID POLYSTYRENE, POLYURETHANE OR POLYISOCYANURATE BOARD (MIN. R-8 FOR CLIMATE ZONES 1 THROUGH 4), OR A 3" THICK (MIN R-12 FOR CLIMATE ZONES 5 THROUGH 8). INTERNAL FIBERGLASS INSULATION SHALL BE LINATEX BY JOHNS MANVILLE OR EQUAL. EXTERNAL RIGID BOARD INSULATION SHALL BE THERMAPINK BY OWENS CORNING OR EQUAL.
11. FOR APPLICABLE SITUATIONS OR PLAYPLACE ADDITIONS: ALL EXPOSED SPIRAL DUCTWORK SHALL BE INTERNALLY INSULATED TO PREVENT CONDENSATION (MIN. R-4.3). INTERNAL INSULATION SHALL BE 1" THICK SPIRACOUSTIC PLUS BY JOHNS MANVILLE OR EQUAL.
12. ALL DUCTWORK PENETRATIONS THROUGH FIRE-RATED WALLS, BARRIERS OR PARTITIONS SHALL BE PROTECTED WITH A FIRE DAMPER. THE PERIMETER OF THE FIRE DAMPER SHALL BE FIRESTOPPED WITH AN APPROVED AND LISTED FIRESTOPPING MATERIAL.
13. ALL EXTERIOR SHEET METAL DUCTWORK SHALL BE EXTERNALLY WRAPPED WITH AN APPROVED WEATHERPROOFING MATERIAL TO PROTECT AGAINST WATER PENETRATION AND CORROSION. SIDES AND TOP OF EXTERNAL WEATHERPROOFING SHALL BE ALUMAGUARD 60 MIL UV BARRIER BY POLYGUARD OR EQUAL. BOTTOM OF EXTERNAL WEATHERPROOFING SHALL BE VAPORGUARD 5 MIL MEMBRANE BY POLYGUARD OR EQUAL.
14. ALL FLEXIBLE DUCTWORK, METALLIC AND NONMETALLIC, SHALL CONFORM TO THE FOLLOWING:
   A. 2" THICK INSULATION (R-6.0) SEE NOTE#9 AND TABLE(S) BELOW:

DUCT LOCATION: UNCONDITIONED SPACE			CLIMATE ZONES 1 THROUGH 8
DUCTWORK CLASSIFICATION	PRESSURE	SEAL CLASS	INSULATION
SUPPLY	2.00" W.C.	A	TYPE A (R-6)
RETURN	-2.00" W.C.	A	TYPE A (R-6)
EXHAUST	-2.00" W.C.	A	(*)TYPE A (R-6)
HANGER SUPPORTS	EVERY 6 FT.		1" TYPE B

DUCT LOCATION: EXTERIOR (INCLUDES ATTICS ABOVE INSULATED CEILINGS AND CRAWL SPACES.			CLIMATE ZONES 1 THROUGH 4	CLIMATE ZONES 5 THROUGH 8
DUCTWORK CLASSIFICATION	PRESSURE	SEAL CLASS	INSULATION	INSULATION
SUPPLY	2.00" W.C.	A	TYPE A (R-8)	TYPE A (R-12)
RETURN	-2.00" W.C.	A	TYPE A (R-8)	TYPE A (R-12)
EXHAUST	-2.00" W.C.	A	(*)TYPE A (R-8)	(*)TYPE A (R-12)
HANGER SUPPORTS	EVERY 6 FT.		1" TYPE B	

(*) EXHAUST DUCTWORK IS ONLY REQUIRED TO BE INSULATED WITHIN 2-FEET OF ROOF PENETRATION. REFER TO "COMMERCIAL KITCHEN EXHAUST SYSTEMS", NOTE#4 FOR FIRE WRAPPING REQUIREMENTS ON KITCHEN GREASE DUCTWORK.

   B. INTEGRAL VAPOR BARRIER
   C. LISTED AND LABELED UL 181, CLASS 0 OR CLASS 1
   D. INSTALLED IN ACCORDANCE WITH:
      i. SMACNA STANDARDS,
      ii. AIR DIFFUSION COUNCIL INSTALLATION GUIDELINES, AND/OR
      iii. MANUFACTURER'S INSTALLATION INSTRUCTIONS
15. FLEXIBLE DUCTWORK SHALL NOT PENETRATE WALLS. SHEET METAL DUCTWORK IS REQUIRED AT ALL FIRE-RATED AND DRAFTSTOP WALL PENETRATIONS.
15. ALL COVERINGS, LININGS AND ADHESIVES (TAPES, ETC.) SHALL HAVE A FLAME-SPREAD INDEX NOT GREATER THAN 25 AND A SMOKE-DEVELOPED INDEX NOT GREATER THAN 50.
16. DUCT-MOUNTED SMOKE DETECTORS, PROVIDED BY ROOFTOP UNIT MANUFACTURER, SHALL BE INSTALLED IN SYSTEMS WITH DESIGN CAPACITY GREATER THAN 2,000 CFM. SEE MECHANICAL DRAWINGS FOR LOCATIONS OF SMOKE DETECTORS. DUCT-MOUNTED SMOKE DETECTORS ARE NOT REQUIRED WHEN THE BUILDING IS PROTECTED THROUGHOUT BY AREA SMOKE DETECTORS CONNECTED TO A FIRE ALARM SYSTEM WHERE THE FIRE ALARM SYSTEM IS DESIGNED TO SHUT DOWN THE ROOFTOP UNITS.
17. ALL SUPPLY AIR DIFFUSERS SHALL BE INSULATED TO PREVENT CONDENSATION.
18. ALL AIR DEVICES LOCATED IN DRYWALL CEILINGS SHALL BE SUPPLIED WITH AN INTEGRAL VOLUME DAMPER ACCESSIBLE FROM THE AIR DEVICE FACE TO FACILITATE BALANCING.
19. ALL OUTDOOR AIR INTAKES SHALL BE LOCATED A MINIMUM OF 10 FT. HORIZONTALLY FROM ANY SOURCE OF CONTAMINATION SUCH AS EXHAUST FANS, PLUMBING VENTS, WATER HEATER FLUES, ETC. WHERE A CONTAMINANT SOURCE IS LOCATED WITHIN 10 FT. OF AN INTAKE, THE INTAKE OPENING SHALL BE LOCATED A MINIMUM OF 2 FT. BELOW THE CONTAMINANT SOURCE.
20. ALL ROOFTOP CONDENSING UNITS THAT DISCHARGE HORIZONTALLY SHALL BE ORIENTED SUCH THAT THE DISCHARGE DOES NOT BLOW IN THE DIRECTION OF AN OUTDOOR AIR INTAKE.

COMMERCIAL KITCHEN EXHAUST SYSTEMS:

1. ALL METAL DUCTWORK USED FOR THE CONVEYANCE OF GREASE-LADEN AIR SHALL BE CONSTRUCTED OF MINIMUM 18 GAUGE STAINLESS STEEL OR 16 GAUGE CARBON STEEL (BLACK IRON).
2. ALL GREASE EXHAUST DUCTWORK JOINTS SHALL BE EITHER TELESCOPING OR BELL TYPE. BUTT-WELDED JOINTS ARE PROHIBITED.
3. ALL GREASE EXHAUST DUCTWORK SEAMS AND JOINTS SHALL BE CONTINUOUSLY WELDED WATER-TIGHT ON THE EXTERNAL SURFACE OF THE DUCT SYSTEM. ALL WELDING SHALL BE PERFORMED BY A CERTIFIED WELDER.
4. ALL GREASE EXHAUST DUCTWORK SHALL BE EXTERNALLY INSULATED WITH A ASTM E2336 LISTED AND LABELED GREASE DUCT ENCLOSURE SYSTEM. INSULATION SHALL BE INSTALLED IN ACCORDANCE WITH ITS LISTING AND THE MANUFACTURER'S INSTALLATION INSTRUCTIONS.
5. ACCESS PANELS SHALL BE PROVIDED AT ALL CHANGES IN DIRECTION OF THE GREASE EXHAUST DUCTWORK SYSTEM. ACCESS PANELS SHALL BE INSTALLED IN ACCORDANCE WITH THE INSULATION MANUFACTURER'S INSTALLATION INSTRUCTIONS AND SHALL BE LABELED AS FOLLOWS: "ACCESS PANEL – DO NOT OBSTRUCT".
6. ALL HORIZONTAL GREASE EXHAUST DUCTWORK SHALL BE INSTALLED WITH A MINIMUM ¼" PER FOOT SLOPE AND SHALL BE PITCHED BACK TOWARD THE HOOD.
7. UPBLAST KITCHEN EXHAUST FANS SHALL BE LOCATED A MINIMUM OF 6 FT. FROM ANY PARAPET WALL OR ADJACENT STRUCTURE AND SHALL TERMINATE A MINIMUM OF 40 INCHES ABOVE THE FINISHED ROOFING MATERIAL.

REFRIGERANT PIPING:

1. ALL REFRIGERATION WORK SHALL BE PERFORMED BY A CERTIFIED REFRIGERATION CONTRACTOR.
2. ALL REFRIGERANT PIPING SHALL BE SEAMLESS COPPER TUBING OF TYPE L IN ACCORDANCE WITH ASTM B 88 AND ALL JOINTS SHALL BE SOLDERED.
3. ALL REFRIGERANT SUCTION LINES SHALL BE INSULATED WITH A MINIMUM 1" FOAM PIPE INSULATION. PIPE INSULATION INSTALLED OUTDOORS SHALL BE PROTECTED WITH AN APPROVED WEATHERPROOFING MATERIAL.
4. ALL SUSPENDED REFRIGERANT PIPING SHALL BE SUPPORTED AS FOLLOWS:

MATERIAL	MAX. HORIZ. SPACING	MAX. VERT. SPACING
COPPER TUBING ≤1¼"	6 FT.	10 FT.
COPPER TUBING ≥1½"	10 FT.	10 FT.

5. ALL REFRIGERANT PIPING SHALL BE SIZED PER EQUIPMENT MANUFACTURER'S RECOMMENDATIONS.
6. PRE-CHARGED LINESETS ARE NOT PERMITTED AS LINES WILL MOST LIKELY NEED TO BE CUT TO FIT THE APPLICATION AND REFRIGERANT WILL NEED TO BE RECLAIMED.
7. ALL PIPE INSULATION SHALL BE PROTECTED FROM DAMAGE FROM PIPE HANGERS. PROTECTION SHALL BE LIGHT GAUGE GALVANIZED STEEL OR EQUAL.
8. ALL REFRIGERANT PIPING SYSTEMS SHALL BE PRESSURE TESTED FOR LEAKS PRIOR TO START-UP. ALL LEAKS SHALL BE REMEDIED PRIOR TO BUILDING TURNOVER.
9. ALL PIPING SHALL MEET MINIMUM INSULATION THICKNESS PER THE TABLE BELOW:

PIPING	MINIMUM INSULATION THICKNESS (IN INCHES) PER NOMINAL PIPE OR TUBE SIZE				
NOMINAL PIPE SIZE	<1	1 TO 1.5	1.5 TO <4	4 TO <8	≥8
LIQUID (REFRIGERATION) (<40°F)	0.5	1.0	1.0	1.0	1.5
SUCTION (REFRIGERATION) (<40°F)	0.5	1.0	1.0	1.0	1.5

CO2 DETECTION EQUIPMENT:

1. THE CO2 DETECTOR SHALL BE HARD-WIRED TO PREVENT TAMPERING AND SHALL BE INSTALLED AT 12" A.F.F. WITHIN A 5 FT. RADIUS OF THE CO2 STORAGE TANKS.
2. ONE (1) AUDIBLE AND ONE (1) VISUAL ALARM SHALL BE INSTALLED A MINIMUM OF 7 FT. A.F.F., IN PLAIN SIGHT IN THE SAME ROOM AS THE CO2 STORAGE TANKS.
3. ONE (1) AUDIBLE AND ONE (1) VISUAL ALARM SHALL BE INSTALLED A MINIMUM OF 7 FT. A.F.F., AT THE BACK OF THE KITCHEN AND IN PLAIN SIGHT FROM THE MAIN SIDE OF THE PREP LINE.
4. THE CO2 EXTERIOR STROBE SHALL BE INSTALLED AS SHOWN ON SHEET A2.0, (DETAIL 2) AND ON SHEET E1.1. THE INSIDE AUDIBLE AND VISUAL ALARM SHALL BE INSTALLED INSIDE THE CO2 CLOSET, AND IN THE SUPPORT/BACK-OF-THE HOUSE LOCATION AS SHOWN ON SHEETS E1.1 AND E3.0.

CONDENSATE PIPING:

13. CONDENSATE PIPING SHALL BE GALVANIZED STEEL, COPPER OR PVC.
14. PVC PIPE SHALL BE PAINTED WITH WATER BASED LATEX PAINTING TO RESIST DEGRADATION FROM ULTRAVIOLET EXPOSURE.
15. PIPE SUPPORTS SHALL BE RPS MODEL PMP-2 OR EQUAL. QUANTITY AS REQUIRED DEPENDANT UPON PIPING MATERIAL.
16. PIPING SHALL BE SUPPORTED AS FOLLOWS:

MATERIAL	MAX. HORIZ. SPACING	MAX. VERT. SPACING
COPPER PIPE	12 FT.	10 FT.
GALVANIZED STEEL	12 FT.	15 FT.
PVC	4 FT.	15 FT.

17. CONDENSATE PIPING SHALL SLOPE A MINIMUM OF ⅛" PER FOOT.
18. CONDENSATE PIPING SHALL BE SIZED BASED ON THE FOLLOWING:

TOTAL TONS SERVED BY PIPE	MINIMUM PIPE SIZE
<20 TONS	¾"
>20 TONS, <40 TONS	1"
>40 TONS, <125 TONS	1½"

LEGEND

TS	TEMPERATURE SENSOR
ATS	AVERAGING TEMPERATURE SENSOR
CO2	CO2 SENSOR FOR ROOFTOP UNIT DEMAND CONTROL VENTILATION
HS	HUMIDITY SENSOR
T	THERMOSTAT
2	SMOKE DETECTOR
KH 2	EQUIPMENT TAG
R-1 / 1750 CFM / 18"ø	DIFFUSER INFORMATION LINE 1: TAG LINE 2: AIRFLOW LINE 3: NECK SIZE
	SUPPLY AIR DUCT (VERTICAL)
	RETURN OR EXHAUST AIR DUCT (VERTICAL)
	ROUND DUCT (VERTICAL)
SSC	STEADY-STATE SPEED CONTROLLER
	PLAQUE DIFFUSER (SHADED AREA DESIGNATES BLANK-OFF PANEL LOCATION)
	LINEAR SLOT DIFFUSER
	LOUVERED FACE DIFFUSER
	CEILING-MOUNTED EXHAUST FAN
	SPIN-IN COLLAR WITH VOLUME DAMPER
	VOLUME DAMPER
	FLEXIBLE DUCTWORK
12"ø	SHEET METAL DUCTWORK W/DIA. SIZE
	PERFORATED FACE DIFFUSER
	SHEET METAL TEE WITH CAP

ABBREVIATIONS

ACM	AREA CONSTRUCTION MANAGER
B.J.	BELOW JOISTS
BSI	BEVERAGE SYSTEM INSTALLER
DCV	DEMAND CONTROL VENTILATION
E.A.	EXHAUST AIR
EC	ELECTRICAL CONTRACTOR
FAC	FIRE ALARM CONTRACTOR
FOB	FLAT ON BOTTOM
FOT	FLAT ON TOP
FPC	FIRE PROTECTION CONTRACTOR
GC	GENERAL CONTRACTOR
I.D.	INSIDE DIMENSION
KEI	KITCHEN EQUIPMENT INSTALLER
KES	KITCHEN EQUIPMENT SUPPLIER
M.A. (S)	MIXED AIR – SUMMER
M.A. (W)	MIXED AIR – WINTER
MC	MECHANICAL CONTRACTOR
O.A.	OUTDOOR AIR
O.D.	OUTSIDE DIMENSION
O/O	OWNER/OPERATOR
PC	PLUMBING CONTRACTOR
R.A.	RETURN AIR
RC	REFRIGERATION CONTRACTOR
S.A.	SUPPLY AIR
S.P.	STATIC PRESSURE
MC	TEST AND BALANCE CONTRACTOR

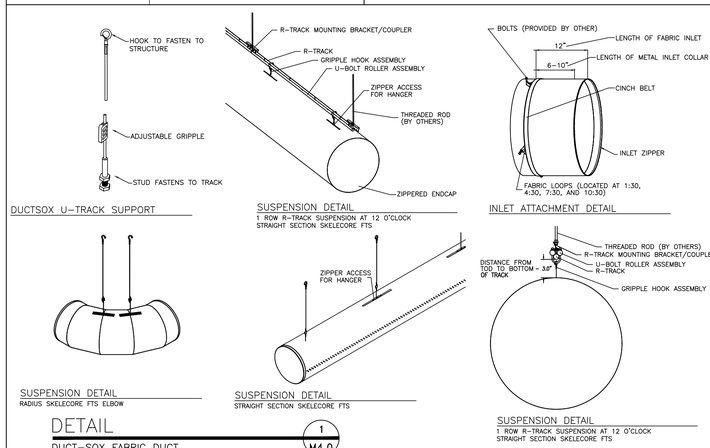

DETAIL 1 / M4.0
DUCT-SOX FABRIC DUCT
N.T.S.

2

REV	DATE	DESCRIPTION	BY
1	04/08/2025	COUNTY COMMENTS, MCD QC COMMENTS, & UTILITY COORDINATION	
2	05/09/2025	PLAYPLACE ADDITION	

Robert D. Anderson ,Inc.
MEP Engineering & Design Consultants
HVAC*Illumination*Plumbing*Power Distribution*Controls
Robert D. Anderson
4403 Zion Rd.
Garland , TX 75043
voice: 972-814-7324
email: robert.d.anderson@bellegal.net
contact: Mark Swanson-Project Manager
voice: 817-556-0986
email: mark@mepdesigntx.com

DRAWING IS DIAGRAMMATIC AND AS SUCH ADJUSTMENTS FOR UNKNOWN FIELD CONDITIONS MAY BE REQUIRED. THIS DRAWING WAS PREPARED FOR SPECIFIC USE ON THE DATE AND SITE INDICATED HEREON. ANY REUSE OF THIS DRAWING FOR OTHER PURPOSES OR ON OTHER PROJECT REQUIRES THE REVISION OF THIS ENGINEER DRAWINGS AND SUBJECT TO COPYRIGHT AND MAY NOT BE REPRODUCED, DISTRIBUTED, PUBLISHED OR USED IN ANY WAY WITHOUT THE EXPRESS WRITTEN CONSENT OF ROBERT D. ANDERSON, P.E.

ROBERT D. ANDERSON 44987 STATE OF TEXAS PROFESSIONAL ENGINEER
Firm No. F-5324 06/12/25

PREPARED FOR: McDonald's USA, LLC
© 2024 McDonald's USA, LLC
These drawings and specifications are the confidential and proprietary property of McDonald's USA, LLC and shall not be copied or reproduced without written authorization. The contract documents were prepared for use on the specific site in conjunction with its issue date and are not to be used at any other location or with any other project. Use of these drawings for reference or example on another project requires the services of properly licensed architects and engineers. Reproductions of the Standard Drawings for reuse on another project is not authorized.

DRAWN BY: MES
STD ISSUE DATE: 2024
REVIEWED BY: JAW
DATE ISSUED: 10/11/2024

TITLE: 2024 STANDARD BUILDING – BB20
4584-WOOD/WOOD
DESCRIPTION: WOOD BEARING WALLS WITH HARDIE SIDING
WOOD ROOF TRUSS FRAMING
EIFS/BATTEN/METAL/HARDIE SIDING EXTERIOR FINISHES
SITE ID: 042-3591
SITE ADDRESS: NWC OF FM 460 & FM 740, FORNEY TEXAS

JAWA 24-0151
SHEET NO. M4.0
GENERAL NOTES

COORDINATION SCHEDULE

GENERAL REQUIREMENTS	FURNISH	INSTALL	FINAL CONNECTION	NOTES
MECHANICAL PERMIT	MC			1–3
HOT WORK (WELDING) PERMIT (IF APPLICABLE)	MC			1–3
REFRIGERATION PERMIT (IF APPLICABLE)	KES			1–3
PLUMBING PERMIT	PC			1–3
ELECTRICAL PERMIT	EC			1–3
FIRE SPRINKLER PERMIT (IF APPLICABLE)	FPC			1–3
FIRE ALARM PERMIT (IF APPLICABLE)	FAC			1–3
CONTRACTOR COORDINATION REQUIREMENTS				
HEATING & AIR–CONDITIONING				
ROOFTOP UNITS, INTAKE AND RELIEF	MCD CP	MC		1–5, 17, 22
ROOF CURBS	MCD CP	MC		1–3, 20, 22
GAS PIPING AND GAS PIPE KIT	PC	PC	PC	1–3, 14, 22–23
CONTROLS WIRING	MC	EC	EC	1–3, 19, 22, 24
POWER WIRING	EC	EC	EC	1–3, 19, 22, 24
CONDENSATE TRAP	MC	PC		1–3, 22–23
CONDENSATE PIPING (IF APPLICABLE)	PC	PC		1–3, 22–23
DUCT–MOUNTED SMOKE DETECTOR	MC	MC	EC	1–3, 22, 24
GENERAL EXHAUST SYSTEMS				
EXHAUST FANS	MCD CP	MC		1–3, 17, 22
ROOF CURBS	MCD CP	MC		1–3, 22
CONTROLS (WHERE APPLICABLE)	MC	EC	EC	1–3, 22, 24
POWER WIRING	EC	EC	EC	1–3, 22, 24
TEMPERATURE CONTROLS				
BUILDING AUTOMATION SYSTEM	MCD CP	MC	EC	1–3, 22, 24
REMOTE SENSORS (RH AND/OR TEMPERATURE)	MC	MC	EC	1–3, 22, 24
CONTROLS WIRING (WHERE APPLICABLE)	MC	EC	EC	1–3, 22, 24
POWER WIRING	EC	EC	EC	1–3, 22, 24
DUCTWORK AND ACCESSORIES				
GALVANIZED SHEET METAL DUCTWORK	MC	MC		1–3, 22
EXTERNAL INSULATION	MC	MC		1–3, 22
INTERNAL INSULATION (IF APPLICABLE)	MC	MC		1–3, 22
WEATHERPROOFING (IF APPLICABLE)	MC	MC		1–3, 22
SPIN–IN COLLARS	MC	MC		1–3, 22
FLEXIBLE DUCTWORK	MC	MC		1–3, 22
VOLUME/BALANCING DAMPERS	MC	MC		1–3, 22
FIRE DAMPERS (IF APPLICABLE)	MC	MC		1–3, 22
FIRESTOPPING (IF APPLICABLE)	MC	MC		1–3, 22
AIR DEVICES AND ACCESSORIES	MC	MC	MC	1–3, 7, 22, 28
PLUMBING SYSTEMS				
WATER HEATERS	MCD CP	PC	PC	1–3, 11–12, 23
HOT AND COLD WATER PIPE	PC	PC	PC	1–3, 23
VENTS AND INTAKES	PC	PC	PC	1–3, 23
THERMOSTATIC MIXING VALVE	PC	PC	PC	1–3, 23
POWER AND CONTROL WIRING	EC	EC	EC	1–3, 23–24
KITCHEN EXHAUST SYSTEMS				
McDONALD'S BACKSHELF EXHAUST HOODS	KES	KEI		1–3, 6, 22, 27
CANOPY EXHAUST HOODS (IF APPLICABLE)	KES	KEI		1–3, 6, 22, 27
BLACK IRON DUCTWORK	KES	KEI		1–3, 6, 22
STAINLESS STEEL DUCTWORK (IF APPLICABLE)	KES	KEI		1–3, 6, 22
ALUMINUM DUCTWORK (IF APPLICABLE)	KES	KEI		1–3, 6, 22
UL LISTED DUCT WRAP	MC	MC		1–3, 6, 22
FIRE–RATED DUCT ENCLOSURE (IF APPLICABLE)	GC	GC		1–3, 6, 20, 22
EXHAUST FANS	MCD CP	MC		1–3, 6, 17, 22
ROOF CURBS	MCD CP	MC		1–3, 6, 20, 22
CURB EXTENSIONS	MC	MC		1–3, 6, 22
CONTROLS (WHERE APPLICABLE)	EC	EC	EC	1–3, 6, 22, 24
POWER WIRING	EC	EC	EC	1–3, 6, 22, 24
FIRE SUPPRESSION SYSTEM	KES	KES	KES	1–3, 16, 22, 27
KITCHEN EQUIPMENT				
COOLER/FREEZER	KES	GC		1–3, 27
EVAPORATOR COILS	KES	MC		1–3, 27
CONDENSATE PIPING	PC	PC	PC	1–3, 23, 27
REMOTE CONDENSING UNIT (MAC)	KES	MC		1–3, 22, 27
ROOF CURBS	MC	MC		1–3, 22
REFRIGERANT PIPING	KES	MC	MC	1–3, 22, 27
POWER WIRING	EC	EC	EC	1–3, 22, 24, 27
CONTROL WIRING	EC	EC	EC	1–3, 24, 27
PIPE PORTALS	MC	MC		1–3, 22
ICE MACHINES	KES	KEI		1–3, 27
WATER SUPPLY PIPING	KES	KEI	BSI	1–3, 27
REMOTE CONDENSING UNITS	KES	MC		1–3, 22, 27
ROOF CURBS	MC	MC		1–3, 22, 27
REFRIGERANT PIPING	KES	MC	MC	1–3, 22, 27
POWER WIRING	EC	EC	EC	1–3, 22, 24, 27
CONTROL WIRING	KES	EC	EC	1–3, 24, 27
PIPE PORTALS	MC	MC		1–3, 22
GRILLS	KES	KES		1–3, 27
GAS PIPING (IF APPLICABLE)	PC	PC	PC	1–3, 23, 27
POWER WIRING	EC	EC	EC	1–3, 24, 27
CONTROL CABLE (6' CLAMSHELL ONLY)	MC	EC	EC	1–3, 23, 24, 27
FRYERS	KES	KES		1–3, 27
GAS PIPING (IF APPLICABLE)	PC	PC	PC	1–3, 23, 27
POWER WIRING	EC	EC	EC	1–3, 24, 27
3–COMPARTMENT SINK	KES	KES		1–3, 12, 27
FAUCETS AND PRE–RINSE SPRAYER	KES	KES		1–3, 27
WATER SUPPLY PIPING	PC	PC	PC	1–3, 23, 27
SANITARY DRAIN PIPING	PC	PC	PC	1–3, 23, 27
HAND SINKS	MCD CP	PC		1–3, 23, 27
FAUCET	MCD CP	PC		1–3, 23, 27
WATER SUPPLY PIPING	PC	PC	PC	1–3, 23, 27
SANITARY DRAIN PIPING	PC	PC	PC	1–3, 23, 27
VEGETABLE SINK	KES	KES		1–3, 23, 27
FAUCET	KES	KES		1–3, 23, 27
WATER SUPPLY PIPING	PC	PC	PC	1–3, 23, 27
SANITARY DRAIN PIPING	PC	PC	PC	1–3, 23, 27
WASHING MACHINE	KES	KES		1–3, 23, 27
WATER SUPPLY PIPING	PC	PC	PC	1–3, 23, 27
SANITARY DRAIN PIPING	PC	PC	PC	1–3, 23, 27
WARE WASHER	KES	KES		1–3, 23, 27
WATER SUPPLY PIPING	PC	PC	PC	1–3, 23, 27
SANITARY DRAIN PIPING	PC	PC	PC	1–3, 23, 27
MISCELLANEOUS ITEMS				
FIRE SPINKLER SYSTEMS	FPC	FPC	FPC	1–3, 15, 25
HVAC EQUIPMENT START–UP	MC			1–3, 22
TEST, ADJUST AND BALANCE HVAC SYSTEMS	TAB			1–3, 22
DOOR GRILLES (IF APPLICABLE)	MC	GC		1–3, 20, 22
ROOF/WALL OPENINGS	GC			1–3, 20–24
APPLIANCE BACKFLOW PREVENTION	KES/BSI	PC	PC	1–3, 23, 27
CO2 DETECTION SYSTEM	KES/BSI	EC/BSI	EC/BSI	1–3, 22, 27

NOTES:
1. THIS SCHEDULE IS INTENDED AS A GUIDE FOR THE WORK TO BE PERFORMED. ALL WORK SHALL BE COORDINATED BETWEEN THE McDONALD'S AREA CONSTRUCTION MANAGER AND ALL GC AND O/O SUBCONTRACTORS.
2. ONE (1) COPY OF THE DECOR PACKAGE DRAWINGS SHALL BE SUPPLIED TO THE GENERAL CONTRACTOR AND EACH OF THE SUBCONTRACTORS. IT SHALL BE THE RESPONSIBILITY OF THE GENERAL CONTRACTOR AND THE SUBCONTRACTORS TO INSURE THAT THEY HAVE RECEIVED THE DECOR PACKAGE DRAWINGS.
3. FOR ANY WORK NOT CLARIFIED IN THIS SCHEDULE OR IN THE NOTES AND SPECIFICATIONS, PLEASE CONSULT THE McDONALD'S CONSTRUCTION MANAGER FOR SCOPE OF WORK.
4. ALL ROOFTOP UNIT EQUIPMENT SUPPLIED BY THE MECHANICAL CONTRACTOR AND THE KITCHEN EQUIPMENT SUPPLIER SHALL BE ON SITE AT THE SAME TIME FOR A SINGLE CRANE LIFT. EQUIPMENT SITE ARRIVAL DATE SHALL BE COORDINATED BETWEEN THE CONSTRUCTION MANAGER, MECHANICAL CONTRACTOR AND KITCHEN EQUIPMENT SUPPLIER.
5. ALL ROOFTOP UNITS INSTALLED IN McDONALD'S RESTAURANTS SHALL BE HIGH EFFICIENCY EQUIPMENT. THE INSTALLATION OF STANDARD EFFICIENCY ROOFTOP UNITS IS PROHIBITED. PLEASE REFER TO THE LATEST EDITION OF IECC FOR HVAC EQUIPMENT PERFORMANCE REQUIREMENTS.
6. ALL KITCHEN EQUIPMENT REQUIRING EXHAUST SHALL BE INSTALLED IN ACCORDANCE WITH THESE PLANS. ANY VARIATION FROM THESE PLANS SHALL BE REPORTED TO THE CONSTRUCTION MANAGER AND THE ENGINEER–OF–RECORD.
7. WHERE GYPSUM BOARD CEILINGS ARE INSTALLED, THE MECHANICAL CONTRACTOR SHALL SUPPLY DRYWALL MOUNTING FRAMES FOR LAY–IN TYPE DIFFUSERS.
8. ALL WORK SHOWN ON P1.6 DRAWING(S) SHALL BE COMPLETED BY THE BEVERAGE SYSTEM INSTALLER (OR K.E.S.) UNLESS OTHERWISE NOTED IN THE PLUMBING DRAWINGS.
9. ALL WORK ON P1.0 & P1.2 DRAWING(S) SHALL BE BY THE PLUMBING CONTRACTOR.
10. THE BEVERAGE SYSTEM INSTALLER FURNISHES, RUNS AND CONNECTS ALL FLEXIBLE WATER AND SYRUP LINES FOR ALL AFFECTED EQUIPMENT INCLUDING THE FOLLOWING:
    A. HOT CHOCOLATE
    B. COFFEE BREWER
    C. ICE MACHINE
    D. O.J.
    E. SODA TOWERS
11. NOT USED. 1
12. THE CONSTRUCTION MANAGER, PLUMBING CONTRACTOR AND KITCHEN EQUIPMENT SUPPLIER SHALL COORDINATE WHICH SOILED DISHWASHER (3–COMPARTMENT SINK) IS BEING INSTALLED IN THE RESTAURANT.
13. NOT USED.
14. NOT USED. 1
15. ALL FIRE PROTECTION DRAWINGS CONTAINED WITHIN THIS SET ARE STRICTLY FOR REFERENCE ONLY. FIRE SPRINKLER DRAWINGS SHALL BE DESIGNED AND PERMITTED BY A FIRE PROTECTION CONTRACTOR.
16. ALL R–102 WET CHEMICAL FIRE SUPPRESSION SYSTEMS FOR TYPE I HOODS SHALL BE DESIGNED AND INSTALLED BY A LOCAL ANSUL AGENT. THE USE OF DRY CHEMICAL SYSTEMS IS PROHIBITED. THE LOCAL ANSUL AGENT CONTRACT IS HANDLED THROUGH THE KITCHEN EQUIPMENT SUPPLIER.
17. ALL ROOFTOP UNITS AND EXHAUST FANS ARE SUPPLIED WITH A FACTORY–INSTALLED DISCONNECT SWITCH.
18. ELECTRICAL CONTRACTOR SHALL PROVIDE DISCONNECT SWITCHES FOR REMOTE CONDENSING UNITS.
19. ALL ELECTRICAL CONDUITS FOR ROOFTOP EQUIPMENT SHALL BE BROUGHT UP THROUGH THE BASE OF THE UNIT TO MINIMIZE ROOF PENETRATIONS. WHERE THIS IS NOT POSSIBLE, THE ELECTRICAL CONTRACTOR SHALL PROVIDE THE NECESSARY PIPE PORTALS ON ROOF.
20. WALK–IN COOLER AND WALK–IN FREEZER REFRIGERATION SYSTEMS SHALL MEET THE PERFORMANCE REQUIREMENTS OUTLINED IN THE LATEST EDITION OF IECC. MINIMUM ANNUAL WALK–IN ENERGY FACTOR (AWEF) PROVIDED BY EQUIPMENT MANUFACTURER IS DETERMINED IN ACCORDANCE WITH AHRI 1250.
21. SEE ARCHITECTURAL DRAWINGS FOR ADDITIONAL INFORMATION.
22. SEE STRUCTURAL DRAWINGS FOR ADDITIONAL INFORMATION.
23. SEE MECHANICAL DRAWINGS FOR ADDITIONAL INFORMATION.
24. SEE PLUMBING DRAWINGS FOR ADDITIONAL INFORMATION.
25. SEE ELECTRICAL DRAWINGS FOR ADDITIONAL INFORMATION.
26. SEE FIRE PROTECTION DRAWINGS FOR ADDITIONAL INFORMATION.
27. SEE FIRE ALARM DRAWINGS FOR ADDITIONAL INFORMATION.
28. SEE KITCHEN DRAWINGS FOR ADDITIONAL INFORMATION.
29. SEE DECOR DRAWINGS FOR ADDITIONAL INFORMATION.

AIR DEVICE SCHEDULE

TAG	MANUFACTURER	MODEL	BORDER	SIZE	COLOR	ACCESSORIES	NOTES
S–1	TITUS	PDR	LAY–IN	48x24	WHITE	7	1,2,8
	PRICE	PDDRE					
S–2	TITUS	OMNI	LAY–IN	24x24	VARIES	4,6,7	1,6,7,8
	PRICE	SPD					
S–3	TITUS	OMNI	LAY–IN	12x12	VARIES	1,2,7	1,3,6,8
	PRICE	SPD					
S–4	TITUS	TBDI–80	LAY–IN	48" (2) ¾" SLOTS	VARIES	7	1,5,6,8
	PRICE	TBDI4					
R–1	TITUS	PAR	LAY–IN	24x24	VARIES	7	1,6,8
	PRICE	10					
R–2	TITUS	355RL	SURFACE MOUNT	4x12	WHITE	–	8
	PRICE	530					
E–1	TITUS	355RL	LAY–IN	12x12	WHITE	1,7	1,8
	PRICE	530					

ACCESSORIES:
1. COMBINATION DAMPER AND EQUALIZING GRID
2. PLASTER FRAME FOR DRYWALL CEILING INSTALLATION
3. (NOT USED)
4. BACKPAN INSULATION
5. (NOT USED)
6. BLANK–OFF PANEL AS SHOWN ON DUCTWORK PLAN
7. PLASTER FRAME MAY BE NECESSARY – COORDINATE WITH DECOR DRAWINGS

NOTES:
1. SEE PLAN FOR NECK SIZES
2. FABRICATE 46"x22"x27"H PLENUM WITH 14"ø SIDE INLET (SEE DETAIL 10 ON DRAWING M3.0)
3. PROVIDE 1" FIBERGLASS INSULATION FOR DIFFUSER BACKPAN
4. NOT USED
5. GENERAL CONTRACTOR SHALL PROVIDE ADDITIONAL 4 FT. T–BAR FOR DIFFUSER FRAMING
6. AIR DEVICE FINISH WILL VARY:
   * KITCHEN, STORAGE, RESTROOMS – WHITE
   * DINING ROOM, VESTIBULES – WHITE, BLACK OR PAINTABLE/PRIME COAT (COORDINATE FINAL COLOR WITH DECOR PLANS).
7. ADDITIONAL ACCESSORIES AND/OR ALTERNATE DIFFUSERS MAY BE REQUIRED. REFER TO DECOR DRAWINGS TO VERIFY.
8. ACCEPTABLE ALTERNATIVE MANUFACTURERS: NAILOR & METALAIRE.

AIR CURTAIN SCHEDULE

TAG	MANUFACTURER	MODEL	SERVES	AIRFLOW	ELEC	ACCESS.	NOTES
AC 1	POWERED AIRE	MP 1–30	CASH BOOTH	VARIABLE	MCA: 5.5 MOCP: 20 ½ HP	2–4	1,2
AC 2	POWERED AIRE	MP 1–30	PRESENTER'S BOOTH	VARIABLE	MCA: 5.5 MOCP: 20 ½ HP	2–4	1,2
AC 3	POWERED AIRE	RBT 1–48	STORAGE ENTRANCE	2,559 CFM	MCA: 10 MOCP: 20 ¾ HP	1–4	1,2
AC 4	POWERED AIRE	RBT 1–36	REAR ENTRANCE	2,541 CFM	MCA: 10 MOCP: 20 ¾ HP	1–4	1,2
AC 5	POWERED AIRE	MP 1–30	FORWARD PRESENTER'S BOOTH	VARIABLE	MCA: 5.5 MOCP: 20 ½ HP	2–4	1,2

ACCESSORIES:
1. NSF LISTING
2. DOOR SWITCH
3. DELAY TIMER
4. 120V/1ø/60Hz

NOTES:
1. SET DELAY TIMER TO 30 SECONDS
2. MAINTAIN 7" CLEARANCE FOR MOTOR ACCESS ON SIDE OF AIR CURTAIN.

CONTROLS

SYMBOL	DESCRIPTION	MANUFACTURER	MODEL
T	24V THERMOSTAT (ROOFTOP UNITS)	–	–
	120V THERMOSTAT (COMPUTER CLOSET)	HONEYWELL	T651A3018
TS	REMOTE TEMPERATURE SENSOR	–	–
ATS	REMOTE AVERAGING TEMPERATURE SENSOR	–	–
HS	REMOTE HUMIDITY SENSOR	–	–
	BULK CO2 DETECTION SYSTEM	LOGIC02	–

NOTES:
1. FOR TSTAT, TS, HS AND ATS INFORMATION, REFER TO E4.1
2. TO ORDER HONEYWELL EQUIPMENT CALL (800)575–4841
3. SEE KITCHEN DRAWINGS FOR BULK CO2 DETECTION LOCATIONS

KITCHEN HOOD SCHEDULE

GENERAL					AIRFLOW		FILTERS	
TAG	SERVED BY	MANUFACTURER	MODEL	NOTES	CFM	CFM/LF	QTY/SIZE	FPM
KH 1	EXHAUST FAN (EF–1)	FRANKE H&K	UH–122	1–4	1350	166	(5)10x20	263
KH 2	EXHAUST FAN (EF–2)	FRANKE H&K	UH–50	1–4	575	173	(3)10x16	255
KH 3	EXHAUST FAN (EF–3)	FRANKE H&K	UH–43	1–4	480	166	(2)10x20	255
KH 4	EXHAUST FAN (EF–6)	FRANKE H&K	TYPE II	1–2, 5	600	150	–	–

NOTES:
1. HOODS SHALL BE PROVIDED BY THE KES (SEE COORDINATION SCHEDULE)
2. SEE HOOD DRAWINGS FOR CONSTRUCTION DETAILS AND UL INFORMATION
3. REFER TO E3.2 FOR HOOD/FAN INTERLOCK DETAILS
4. CAPTURE JET PLENUMS TO BE INSTALLED ON HOOD, REFER TO K2.1 KITCHEN SCHEDULE.
5. PROVIDE WITH FASCIA KIT. COORDINATE CONDENSATE DRAINAGE WITH P.C.

FAN SCHEDULE

GENERAL						DESIGN				ELECTRICAL				
TAG	MANUFACTURER	MODEL	SERVES	ACCESSORIES	NOTES	CFM	S.P.	BHP	FRPM	VOLTS	Ø	Hz	HP	FLA AMPS
EF 1	ACCUREX	XCUE–14010VG124MCD	KITCHEN HOOD (KH–1)	1–5,13,14	1,2,6	1350	1.75	0.61	1725	115 TO 10VDC ECM	1	60	1	11.5
EF 2	ACCUREX	XCUE–14010VG124MCD	KITCHEN HOOD (KH–2)	1–5,13,14	1,2,6	575	1.75	0.19	1725	115 TO 10VDC ECM	1	60	1	11.5
EF 3	ACCUREX	XCUE–14010VG124MCD	KITCHEN HOOD (KH–3)	1–5,13,14	1,2,6	480	1.75	0.19	1725	115 TO 10VDC ECM	1	60	1	11.5
EF 4	ACCUREX	XRED–099–VG4X–QD	DINING RESTROOMS	6–9,14	1,2,5	400	0.50	0.07	1126	115 TO 10VDC ECM	1	60	¼	2.5
EF 5	ACCUREX	XCR–A90	DINING ROOM JANITOR'S CLOSET	9–12	1–3,5	75	0.20	–	900	115	1	60	–	0.52
EF 6	ACCUREX	XCUE–099–VG	KITCHEN HOOD (KH–4)	6–9,14	1,2,7	600	0.75	0.19	1725	115	1	60	¼	2.9
TF 1	ACCUREX	XCR–A125	COMPUTER CLOSET	9–12	1–4	100	0.20	–	1100	115	1	60	–	0.79

ACCESSORIES:
1. 2–POLE NEMA 3R DISCONNECT SWITCH FACTORY–WIRED AND MOUNTED TO FAN
2. UL 762 LISTED AND LABELED
3. ROOF CURB MODEL GPF–24–G30 WITH 1" INSULATION
4. CURB EXTENSION INTEGRAL TO MCD FAN PACKAGE
5. HINGED CURB CAP KIT WITH CABLES
6. 120VAC BACKDRAFT DAMPER
7. ROOF CURB MODEL GPI–19–G14 WITH 1" INSULATION AND DAMPER TRAY
8. NEMA 3R DISCONNECT SWITCH
9. EXTERNAL STEADY–STATE SPEED CONTROLLER
10. ROUND DUCT CONNECTOR
11. TWO (2) 10W COMPACT LED LAMPS
12. PRISMATIC LENS
13. WINDBAND EXTENSION ON FAN OUTLET
14. VARIGREEN 10VDC ELECTRONICALLY COMMUTATED MOTOR

NOTES:
1. NO SUBSTITUTIONS PERMITTED
2. TO ORDER ACCUREX EQUIPMENT CALL (888)325–6629 OR E–MAIL: MCD@ACCUREX.COM
3. ELECTRICAL CONTRACTOR SHALL PROVIDE DOOR SWITCH FOR LIGHT CONTROL
4. MECHANICAL CONTRACTOR SHALL FURNISH LINE VOLTAGE THERMOSTAT FOR FAN CONTROL. ELECTRICAL CONTRACTOR SHALL INSTALL THERMOSTAT.
5. CONNECT TO TIMECLOCK FOR FAN SHUT–OFF DURING UNOCCUPIED HOURS
6. REFER TO E3.2 FOR HOOD/FAN INTERLOCK DETAILS
7. UNIT SHALL BE INTERLOCKED WITH WAREWASHER SWITCHING CONTACT.

PACKAGED ROOFTOP UNIT SCHEDULE - DX/ELECTRIC

TAG	AREA SERVED	NOMINAL TONNAGE	MINIMUM OA (CFM)	SUPPLY FAN					COOLING COIL (DX)						HEAT EXCHANGER (ELECTRIC)				MINIMUM EFFICIENCY EER (SEER)	WEIGHT (LBS.)*	UNIT POWER CONNECTION				MANUFACTURER	MODEL NO.	ACCESSORIES
				SUPPLY AIRFLOW	EXT. S.P. (IN	MHP	BHP	RPM	ENTERING AIR DB °F	ENTERING AIR WB °F	LEAVING AIR DB °F	LEAVING AIR WB °F	COOLING CAPACITY (MBH) SENSIBLE	COOLING CAPACITY (MBH) TOTAL	ENTERING AIR (DB °F)	LEAVING AIR (DB °F)	TOTAL CAPACITY (MBH) INPUT(KW)	TOTAL CAPACITY (MBH) OUTPUT	# OF STAGES		VOLT.	PHASE	MCA	MOCP			
RTU-1	KITCHEN	20	1500	7600	1.4	7.5	5.6	1024	78.6	65	59.0	55.9	204.7	233.5	57.6	73.5	60	153630	2	12	208	3	146	150	LENNOX	LCT240H4VL1Y	1, 3, 4, 7, 9, 11, 12, 16, 17, 19, 20, 21
RTU-2	SUPPORT	7.5	800	2300	0.8	1.0	0.9	775	78.6	65.1	59.0	56.0	53.4	74.7	62	72.23	30	76815	2	12.3	1036	208	3	90	90	LENNOX	LCT092H4PEJ1Y	1, 3, 4, 7, 8, 9, 11, 12, 16,17, 19, 20, 21
RTU-3	DINING ROOM	15	1330	50000	1.4	3.0	3.0	940	78.6	65	59.0	55.9	164.4	171.1	62.2	70.6	45	115225	2	12	2751	208	3	131	150	LENNOX	LCT180H4VK1Y	1, 3, 4, 7, 8, 9, 11, 12,16,17, 19, 20, 21
RTU-4	PLAY PLACE	10	700	3600	0.8	3.0	2.9	1115	78.9	65.7	55.0	55.0	89.3	114.4	56.5	85	45	115225	2	12	2751	208	3	90	100	LENNOX	LCT120H4VK1Y	1, 3, 4,6,7, 8, 9, 11, 12,16,17, 19, 20, 21

ACCESSORIES:
1. DIFF. ENTHALPY ECONOMIZER
2. MOTORIZED O.A. DAMPER
3. BAROMETRIC RELIEF
4. MERV 13 FILTER
5. POWER EXHAUST
6. CO2 SENSOR FOR DCV
7. HUMIDITY CONTROL
8. SUPPLY AIR TEMPERING
9. TEMPERATURE SENSOR
10. COMBINED TEMP/HUMIDITY SENSOR
11. DISCONNECT SWITCH
12. FIELD WIRED 120V CONVENIENCE OUTLET
13. STAINLESS STEEL HEAT EXCHANGER
14. CONDENSER COIL PROTECTIVE COATING
15. EVAPORATOR COIL PROTECTIVE COATING
16. HAIL GUARD
17. RETURN AIR SMOKE DETECTOR
18. SUPPLY AIR SMOKE DETECTOR
19. 14" ROOF CURB
20. CONDENSATE DRAIN W/ P-TRAP
21. FLOAT SWITCH KIT

* NET WEIGHT ONLY - DOES NOT INCLUDE ADDITIONAL FACTORY OR FIELD INSTALLED OPTIONS / ACCESSORIES.

NOTES:
1. NO SUBSTITUTIONS PERMITTED.
2. SELECTION BASED ON PRE-PURCHASED LENNOX EQUIPMENT.
3. FACTORY INSTALLED DISCONNECT SWITCH IS NOT AVAILABLE WHEN MOCP IS 200 AMPS OR HIGHER. VERIFY WITH MANUFACTURER'S DOCUMENTATION PRIOR TO ORDERING.
4. MECHANICAL CONTRACTOR SHALL INSTALL SECONDARY ENTHALPY SENSOR IN RETURN AIR DUCT DROP & WIRE TO UNIT PER

2

REV	DATE	DESCRIPTION	BY
1	04/08/2025	COUNTY COMMENTS, MCD QC COMMENTS, & UTILITY COORDINATION	
2	05/09/2025	PLAYPLACE ADDITION	

Robert D. Anderson ,Inc.
MEP Engineering & Design Consultants
HVAC*Illumination*Plumbing*Power Distribution*Controls

Robert D. Anderson
4403 Zion Rd.
Garland ,TX 75043

voice: 972-814-7324
email: robert.d.anderson@deglobal.net
contact: Mark Swanson-Project Manager
voice: 817-556-0986
email: mark@mepdesignrx.com

DRAWING IS DIAGRAMMATIC, AND AS SUCH ADJUSTMENTS FOR UNKNOWN FIELD CONDITIONS MAY BE REQUIRED. THE DRAWING WAS PREPARED FOR SPECIFIC USE ON THE DATE AND SITE INDICATED HEREON. ANY REUSE OF THE DRAWING FOR OTHER PURPOSES OR ON OTHER PROJECT REQUIRES THE SERVICES OF THE ENGINEER. DRAWINGS ARE SUBJECT TO COPYRIGHT AND MAY NOT BE REPRODUCED, DISTRIBUTED, PUBLISHED OR USED IN ANY WAY WITHOUT THE EXPRESS WRITTEN CONSENT OF ROBERT D. ANDERSON, P.E.

ROBERT D. ANDERSON 44987 — 06/12/25
Firm No. F-5324

PREPARED FOR: McDonald's USA, LLC

© 2024 McDonald's USA, LLC
These drawings and specifications are the confidential and proprietary property of McDonald's USA, LLC, and shall not be copied or reproduced without written authorization. The contract documents were prepared for use on this specific site in connection with its issue date and are not to be used at other locations or for other projects. Modifications to these drawings for reference or example on another project requires the services of properly licensed architects and/or engineers. Reproductions of the contract documents for use on other projects, if not authorized by the owner, is prohibited.

DRAWN BY: MES
STD ISSUE DATE: 2024
REVIEWED BY: JAW
DATE ISSUED: 10/11/2024

TITLE: 2024 STANDARD BUILDING – BB20
4584–WOOD/WOOD

DESCRIPTION	SITE ID
WOOD BEARING WALLS WITH HARDIE SIDING	
WOOD ROOF TRUSS FRAMING	
EIFS/BATTEN/METAL/HARDIE SIDING EXTERIOR FINISHES	042–3591
SITE ADDRESS	NWC OF FM 460 & FM 740, FORNEY TEXAS

JAWA 24–0151

SHEET NO. M4.1
SCHEDULES

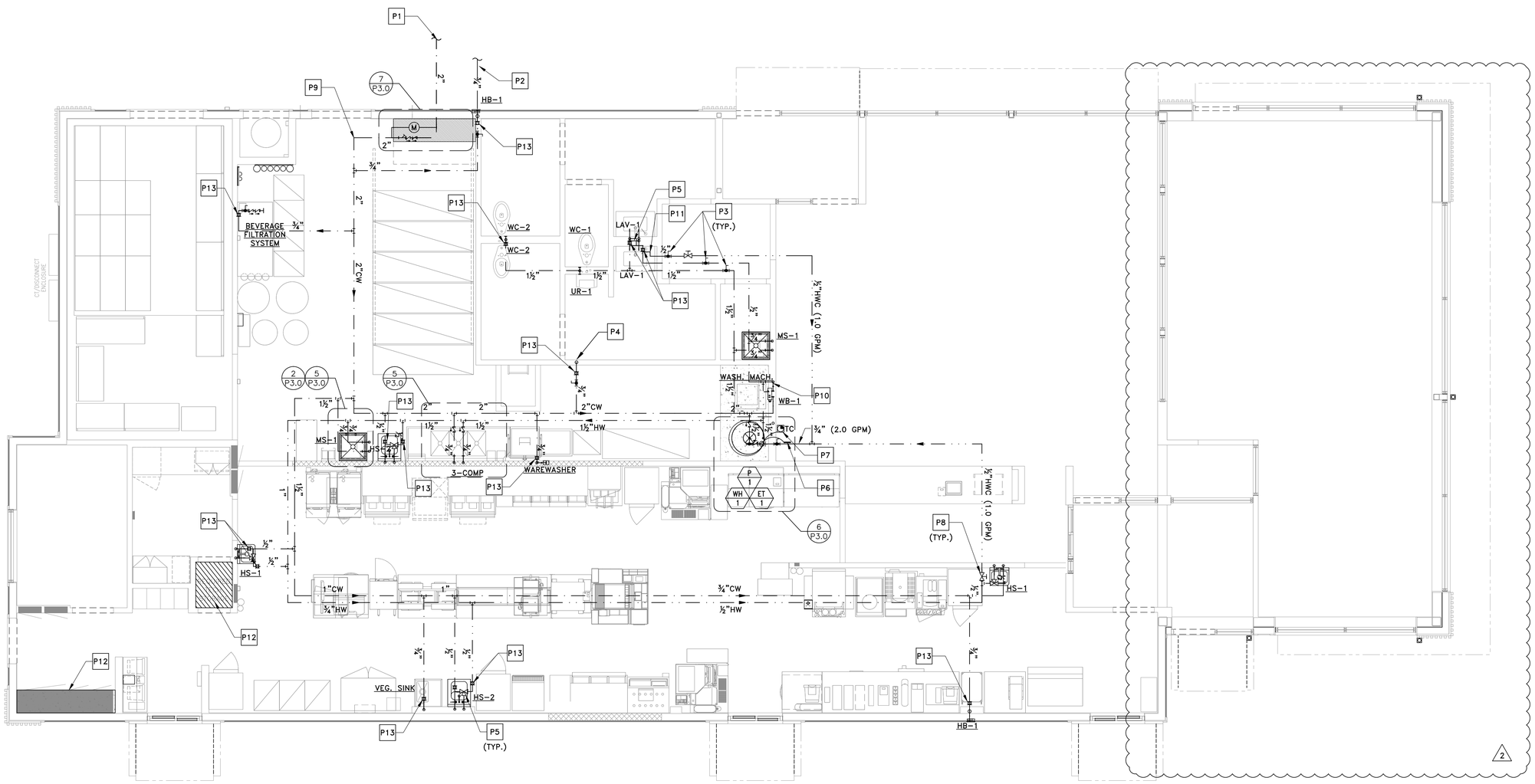

1 P1.0 DOMESTIC WATER PIPING

SCALE: 1/4" = 1'-0"

DRAWING NOTES

1. PIPING ROUTES AS SHOWN ARE GENERAL AND MAY VARY DUE TO FIELD CONDITIONS. COORDINATE ALL PIPE ROUTES WITH OTHER TRADES. MAKE SURE HOT WATER MAIN LOOP REMAINS WITHIN 10 FT OF FIXTURE FOR ENERGY CODE PURPOSE.
2. ALL WATER DISTRIBUTION PIPING SHALL BE INSULATED. INSULATION NOT SHOWN FOR CLARITY. SEE PLUMBING NOTES FOR INSULATION REQUIREMENTS, SHEET M4.0, "DOMESTIC SUPPLY SYSTEMS", NOTE 18.

KEYED NOTES

- **P1** INCOMING UNDERGROUND WATER SERVICE (SEE SITE PLAN FOR CONTINUATION). WATER PIPING FROM THIS POINT TO CEILING PENETRATION INSIDE BUILDING SHALL BE COPPER.
- **P2** COLD WATER UNDERGROUND TO YARD HYDRANT (HB-2) IN TRASH CORRAL. SEE SITE PLAN FOR CONTINUATION.
- **P3** SHUT-OFF VALVE FOR RESTROOM ISOLATION. SEE VALVE SCHEDULE. ALL SHUT-OFF VALVES SHALL BE LOCATED OVER SUSPENDED CEILINGS FOR ACCESSIBILITY. DO NOT LOCATE IN AREAS WITH DRYWALL CEILINGS.
- **P4** ¾" COLD WATER UP TO ROOF HYDRANT.
- **P5** FOR MIXING VALVE LOCATIONS AND INSTALLATION DETAILS ON PUBLIC LAVATORIES, SEE DETAIL 3 ON DRAWING P3.0. FOR PRIVATE HAND SINKS OR LAVS, MIXING VALVES FOR INFORMATIONAL PURPOSES.
- **P6** PIPE-MOUNTED AQUASTAT TO SHUT PUMP DOWN WHEN RECIRULATION TEMPERATURE REACHES 140°F. SEE DETAIL 6 ON DRAWING P3.0.
- **P7** TIME CLOCK TO SHUT PUMP AND WATER HEATER DOWN DURING UNOCCUPIED HOURS. SEE ELECTRICAL DRAWINGS FOR WIRING DETAIL.
- **P8** BALANCING VALVE FOR RECIRCULATION SYSTEM. SEE VALVE SCHEDULE. ALL BALANCING VALVES SHALL BE LOCATED OVER SUSPENDED CEILINGS FOR ACCESSIBILITY. DO NOT LOCATE IN AREAS WITH DRYWALL CEILINGS.
- **P9** WATER PIPING AFTER CEILING PENETRATION CAN TRANSITION TO CPVC OR PEX WHERE PERMITTED BY CODE.
- **P10** PROPERLY SEAL ALL PIPE PENETRATIONS THROUGH DRAFT STOP WALL (TYP.)
- **P11** HOT WATER RECIRCULATION SHALL CONNECT WITHIN 6" OF SUPPLY STUB OUT TO FIXTURE.
- **P12** UTILITIES SHALL NOT BE ROUTED ABOVE THE TECH. CLOSET AND THE SWITCHGEAR.
- **P13** INSTALL WATER-HAMMER ARRESTOR WHERE QUICK-CLOSING VALVES ARE UTILIZED. WATER-HAMMER ARRESTORS SHALL BE INSTALLED IN ACCORDANCE WITH THE MANUFACTURER'S INSTRUCTIONS. WATER-HAMMER ARRESTORS SHALL CONFORM TO ASSE 1010.

PDI SIZE	PIPE SIZE	FIXTURE UNIT LOAD
A	1/2"	1-11
B	3/4"	12-32

FIXTURE	COLD	HOT
VALVE WATER CLOSET	10	--
TANK WATER CLOSET	5	--
URINAL	5	--
LAVATORY/SINK	1.5	1.5
JANITOR'S SINK	3	3
HOSE BIBB	2	--
SODA FACTORY	10	--
WAREWASHER	4	--

PC TO PROVIDE WATER HAMMER ARRESTERS BY SIOUX CHIEF, PRECISION PLUMBING PRODUCTS, WATTS OR APPROVED EQUIVALENT WITH PISTON AND O-RING CONSTRUCTION, HAVING PDI #WH-201, ASSE #1010 AND ANSI #A112.26.1M CERTIFICATION. INSTALL IN HORIZONTAL OR VERTICAL POSITION, BUT NEVER UPSIDE DOWN. INSTALL IN LINE WITH WATER FLOW DIRECTION IF POSSIBLE. SIZE THE UNITS AS SHOWN ON THE DRAWINGS AND/OR PER THE TABLES SHOWN ABOVE.

DETAIL 2 P1.0

WATER-HAMMER ARRESTER (TYP.)
NOT TO SCALE

FIXTURE COUNT - IPC

NO.	FIXTURE DESCRIPTION	SUPPLY CONNECTIONS WSFU	COLD	HOT	TOTAL
1	VEGETABLE PREP SINK	4	¾"	–	4
2	HAND SINK	1	½"	½"	2
4	HOSE BIBB	3	¾"	–	12
1	SODA FACTORY	10	1"	–	10
1	KITCHEN SINK (3-COMP)	4	¾"	¾"	4
2	MOP SINK	2	¾"	¾"	4
2	LAVATORY	1	½"	½"	2
1	URINAL	5	1"	–	5
3	WATER CLOSET	5	1 ½"	–	15
1	WASHING MACHINE	4	¾"	¾"	4
1	WAREWASHER	4	¾"	–	4
				TOTAL:	66

(55 GPM)

REV	DATE	DESCRIPTION	BY
1	04/08/2025	COUNTY COMMENTS, M&O QC COMMENTS, & UTILITY COORDINATION	
2	05/09/2025	PLAYPLACE ADDITION	

Robert D. Anderson ,Inc.
MEP Engineering & Design Consultants
HVAC/Illumination/Plumbing/Power Distribution/Controls

Robert D. Anderson
4403 Zion Rd.
Garland ,TX 75043

voice: 972-814-7324
email: robert.d.anderson@sbcglobal.net
contact: Mark Swanson-Project Manager
voice: 817-556-0986
email: mark@mepdesignrx.com

DRAWING IS DIAGRAMMATIC AND AS SUCH ADJUSTMENTS FOR UNKNOWN FIELD CONDITIONS MAY BE REQUIRED. THIS DRAWING WAS PREPARED FOR SPECIFIC USE ON THE DATE AND SITE INDICATED HEREON. ANY REUSE OF THIS DRAWING FOR OTHER PURPOSES OR ON OTHER PROJECT REQUIRES THE SERVICES OF THE ENGINEER. DRAWINGS ARE SUBJECT TO COPYRIGHT AND MAY NOT BE REPRODUCED, DISTRIBUTED, PUBLISHED OR USED IN ANY WAY WITHOUT THE EXPRESS WRITTEN CONSENT OF ROBERT D. ANDERSON, P.E.

STATE OF TEXAS
ROBERT D. ANDERSON
44987
LICENSED PROFESSIONAL ENGINEER
06/12/25
Firm No. F-5324

PREPARED FOR: McDonald's USA, LLC
© 2024 McDonald's USA, LLC
These drawings and specifications are the confidential and proprietary property of McDonald's USA, LLC and shall not be copied or reproduced without written authorization. The contract documents were prepared for use on the specific site in connection with its issue date and are not suitable for use at any other location or at a future date. Any use of these drawings for reference or example on another project requires the services of Property Licensor architect and/or engineer. Reproduction of the contract documents for reuse on another project is not authorized.

DRAWN BY MES | STD ISSUE DATE 2024 | REVIEWED BY JAW | DATE ISSUED 10/11/2024

TITLE: 2024 STANDARD BUILDING – BB20
4584-WOOD/WOOD

DESCRIPTION: WOOD BEARING WALLS WITH HARDIE SIDING
WOOD ROOF TRUSS FRAMING
EIFS/BATTEN/METAL/HARDIE SIDING EXTERIOR FINISHES

SITE ID: 042-3591
SITE ADDRESS: NWC OF FM 460 & FM 740, FORNEY TEXAS

JAWA 24-0151

SHEET NO. P1.0
DOMESTIC WATER PIPING

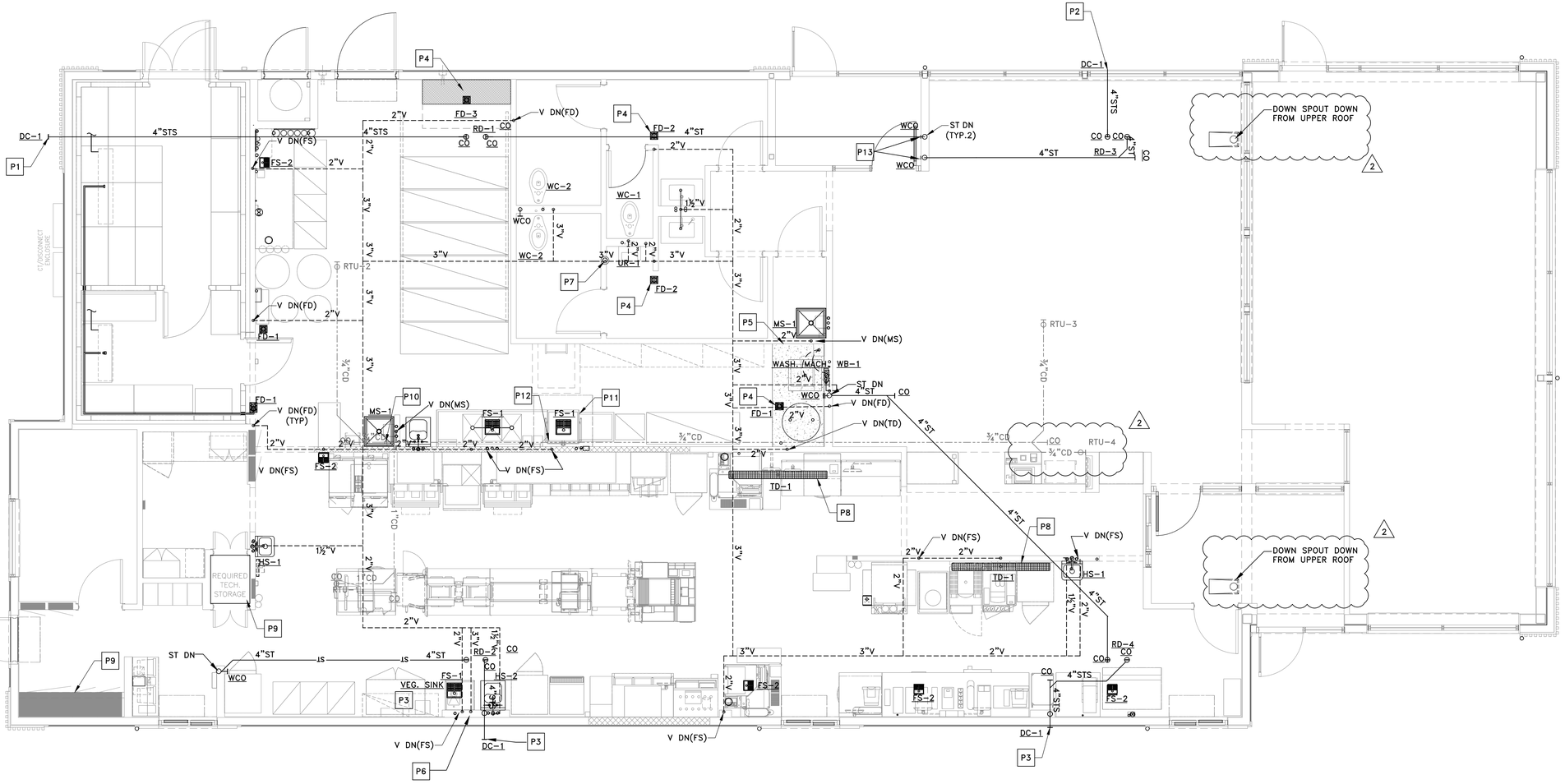

1 P1.2 VENT & STORM PIPING PLAN

SCALE: 1/4" = 1'-0"

DRAWING NOTES

1. PIPING ROUTES ARE GENERAL AND MAY VARY DUE TO FIELD CONDITIONS. COORDINATE ALL PIPE ROUTES WITH OTHER TRADES.
2. WALL CLEAN-OUTS FOR WASTE PIPING NOT SHOWN FOR CLARITY. SEE GENERAL NOTES FOR REQUIREMENTS.
3. ONLY MAIN FLOOR CLEAN-OUTS ARE SHOWN FOR CLARITY. SEE GENERAL NOTES FOR REQUIREMENTS.
4. ALL HORIZONTAL STORM DRAINAGE PIPING SHALL BE INSULATED TO PREVENT CONDENSATION. INSULATION NOT SHOWN FOR CLARITY. SEE PLUMBING NOTES FOR INSULATION REQUIREMENTS.

KEYED NOTES

- P1 TERMINATE OVERFLOW DRAIN AS HIGH AS POSSIBLE WITH DOWNSPOUT COVER.
- P2 TERMINATE OVERFLOW DRAIN ABOVE TRELLIS WITH DOWNSPOUT COVER. BOTTOM OF DOWNSPOUT OUTLET PIPE SHALL BE AT LEAST 3" BUT NOT MORE THAN 8" ABOVE TOP OF TRELLIS.
- P3 TERMINATE BOTTOM OF OVERFLOW DRAIN A MINIMUM OF 12" ABOVE GRADE WITH DOWNSPOUT COVER.
- P4 PROVIDE PROSET TRAP GUARD® FOR FLOOR DRAIN.
- P5 TOP OF CONCRETE SLAB IS 0'-6" A.F.F.
- P6 VENT FROM GREASE INTERCEPTOR. SEE SITE PLAN FOR CONTINUATION. COORDINATE PIPE ROUTING WITH LOCATION OF GREASE INTERCEPTOR.
- P7 4" VENT UP THROUGH ROOF WITH A 4"x5" VENT CAP
- P8 REFERENCE MANUFACTURER INSTALLATION GUIDE FOR LAYOUT AND SLOPING GUIDELINES PRIOR TO INSTALL AND POURING THE SLAB.
- P9 UTILITIES SHALL NOT BE ROUTED ABOVE THE TECH. CLOSET AND THE SWITCHGEAR.
- P10 CONDENSATE LINE FROM RTUs DOWN TO DRAIN AT MOP SINK INDIRECT WITH AIR GAP 2 x DIAMETER, TERMINATE PIPE ABOVE FLOOD RIM. FURNISHED AND INSTALLED BY PC. SEE COORDINATION SCHEDULE ON P4.1 & M4.1.
- P11 CONTRACTOR SHALL ROUTE ½" OD 304 S/S PIPE (PROVIDED BY OTHERS) FROM TYPE II EXHAUST HOOD TO FLOOR SINK.
- P12 CONTRACTOR SHALL INSTALL DRAIN PIPE AND AIR GAP KIT (PROVIDED BY OTHERS). CONNECT DRAIN HOSES FROM WAREWASHER TO DRAIN PIPE PER MANUFACTURER'S INSTALLATION INSTRUCTIONS. REFER TO DETAIL 9/P3-0 FOR FURTHER DETAILS.
- P13 WALL CLEAN OUTS TO BE INSTALLED 18" A.F.F. ON VESTIBULE SIDE. OPTIONAL: PAINT TO MATCH WALL FINISH FOR CONCEALMENT.

STORM PIPE SIZING

RAINFALL = 10 IN./HR

VERTICAL LEADERS

ROOF DRAIN	ROOF AREA SQ. FT.	SIZE IN.
RD-1	1,140	4
RD-2	1,221	4
RD-3	1,177	4
RD-4	1,000	4
TOTAL	4,538	

HORIZONTAL PIPING (SLOPE ⅛" PER FOOT)

ROOF DRAIN	ROOF AREA SQ. FT.	SIZE IN.
RD-2 & RD-4	2,221	6
RD-1 & RD-2 & RD-3 & RD-4	4,538	6

REV	DATE	DESCRIPTION	BY
1	04/08/2025	COUNTY COMMENTS, M/O QC COMMENTS, & UTILITY COORDINATION	
2	05/09/2025	PLAYPLACE ADDITION	

Robert D. Anderson ,Inc.
MEP Engineering & Design Consultants
HVAC/Illumination/Plumbing/Power Distribution/Controls

Robert D. Anderson
4403 Zion Rd.
Garland ,TX 75043

voice: 972-814-7324
email: robert.d.andersonrib@cglegal.net
contact: Mark Swanson-Project Manager
voice: 817-556-0986
email: mark@mepdesigntx.com

DRAWING IS DIAGRAMMATIC, AND AS SUCH ADJUSTMENTS FOR UNKNOWN FIELD CONDITIONS MAY BE REQUIRED. THIS DRAWING WAS PREPARED FOR SPECIFIC USE ON THE DATE AND SITE INDICATED HEREON. ANY USE OF THIS DRAWING ON ANOTHER SITE OR FOR ANOTHER PROJECT REQUIRES THE SERVICES OF THE ENGINEER. DRAWINGS ARE SUBJECT TO COPYRIGHT AND MAY NOT BE REPRODUCED, DISTRIBUTED, PUBLISHED OR USED IN ANY WAY WITHOUT THE EXPRESS WRITTEN CONSENT OF ROBERT D. ANDERSON, P.E.

STATE OF TEXAS
ROBERT D. ANDERSON
44987
LICENSED PROFESSIONAL ENGINEER
06/12/25
Firm No. F-5324

© 2024 McDonald's USA, LLC

FREPARED FOR: McDonald's USA, LLC

These drawings and specifications are the confidential and proprietary property of McDonald's USA, LLC and shall not be copied or reproduced without written authorization. The contract documents were prepared for use on the specific site in conjunction with the issue date and are not suitable for use on other sites or for other purposes. Reproductions of these drawings for reference or example on another project requires the services of a licensed architect and/or engineer. Reproductions of the contract documents for reuse on another project is not authorized.

DRAWN BY: NES | STD ISSUE DATE: 2024 | REVIEWED BY: JAW | DATE ISSUED: 10/11/2024

TITLE: 2024 STANDARD BUILDING – BB20 4584-WOOD/WOOD

DESCRIPTION: WOOD BEARING WALLS WITH HARDIE SIDING; WOOD ROOF TRUSS FRAMING; EIFS/BATTEN/METAL/HARDIE SIDING EXTERIOR FINISHES

SITE ID: 042-3591

SITE ADDRESS: NWC OF FM 460 & FM 740, FORNEY TEXAS

JAWA 24-0151

SHEET NO. P1.2

VENT & STORM PIPING PLAN

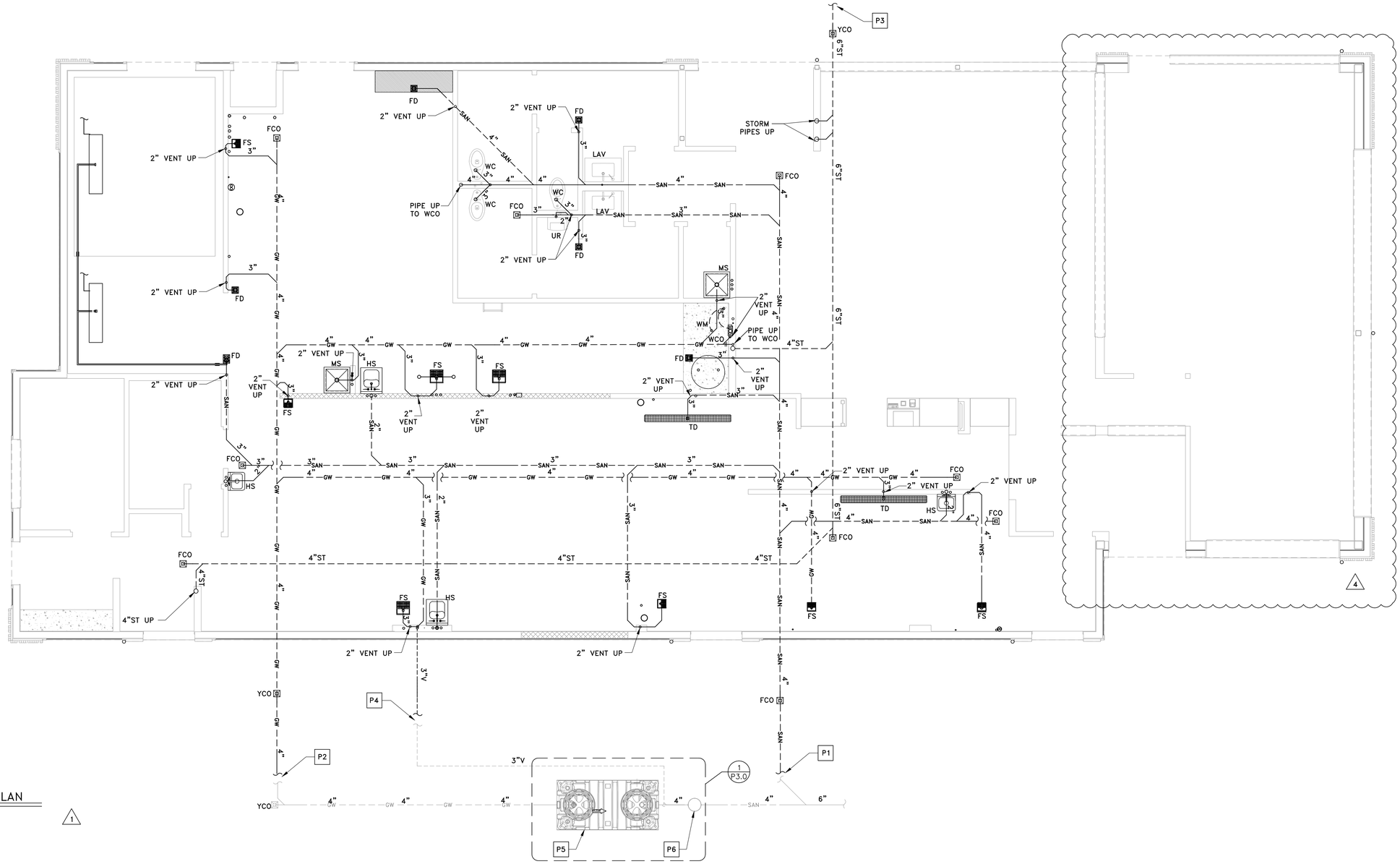

1 P1.3 UNDERFLOOR PLUMBING PLAN

SCALE: 1/4" = 1'-0"

DRAWING NOTES

1. PIPING ROUTES ARE GENERAL AND MAY VARY DUE TO FIELD CONDITIONS. COORDINATE ALL PIPE ROUTES WITH OTHER TRADES.
2. WALL CLEAN-OUTS FOR WASTE PIPING NOT SHOWN FOR CLARITY. SEE GENERAL NOTES FOR REQUIREMENTS.
3. ONLY MAIN FLOOR CLEAN-OUTS ARE SHOWN FOR CLARITY. SEE GENERAL NOTES FOR REQUIREMENTS.

KEYED NOTES

- P1 SANITARY LINE TO SANITARY SEWER. SEE SITE PLAN FOR CONTINUATION.
- P2 GREASE LINE TO EXTERIOR GREASE INTERCEPTOR. SEE SITE PLAN FOR CONTINUATION
- P3 STORM LINE TO STORM SYSTEM. SEE SITE PLAN FOR CONTINUATION.
- P4 VENT FROM GREASE INTERCEPTOR. SEE SITE PLAN FOR CONTINUATION. COORDINATE PIPE ROUTING WITH LOCATION OF GREASE INTERCEPTOR.
- P5 GREASE INTERCEPTOR LOCATION SHOWN FOR REFERENCE ONLY. COORDINATE GREASE INTERCEPTOR LOCATION WITH CIVIL ENGINEER AND SITE CONTRACTOR.
- P6 INSTALL SAMPLING PORT SCHIER, MODEL SV10 FOR SCHIER HYDROMECHANICAL GREASE INTERCEPTOR.

WASTE PIPE SIZING - IPC

FIXTURE TYPE	TRAP SIZE	DFU	QUANTITY	TOTAL
URINAL	2 IN.	4	1	4
WATER CLOSET	3 IN.	4	3	12
LAVATORY	1¼ IN.	1	2	2
WASH SINK (HAND SINK)	1½ IN.	2	4	8
FLOOR DRAIN OR SINK	3 IN.	5	5	25
FLOOR DRAIN OR SINK	4 IN.	6	1	6
EMERGENCY FLOOR DRAIN (BATHROOMS)	3 IN.	0	2	0
			TOTAL	57

GREASE PIPE SIZING - IPC

SERVICE SINK (MOP SINK)	3 IN.	3	2	6
FLOOR DRAIN OR SINK	3 IN.	5	7	35
FLOOR DRAIN OR SINK	4 IN.	6	1	6
WASHING MACHINE	2 IN.	3	1	3
			TOTAL	50

REV	DATE	DESCRIPTION	BY
1	04/08/2025	COUNTY COMMENTS, MCD QC COMMENTS, & UTILITY COORDINATION	
2	05/09/2025	PLAYPLACE ADDITION	

Robert D. Anderson ,Inc.
MEP Engineering & Design Consultants
HVAC/Illumination/Plumbing/Power Distribution/Controls

Robert D. Anderson
4403 Zion Rd.
Garland ,TX 75043

voice: 972-814-7324
email: robert.d.anderson@sbcglobal.net
contact: Mark Swanson-Project Manager
voice: 817-556-0986
email: mark@mepdesigntx.com

DRAWING IS DIAGRAMMATIC AND AS SUCH ADJUSTMENTS FOR UNKNOWN FIELD CONDITIONS MAY BE REQUIRED. THIS DRAWING WAS PREPARED FOR SPECIFIC USE ON THE DATE AND SITE INDICATED HEREON. ANY USE OF THIS DRAWING FOR ANOTHER SITE OR ANOTHER PROJECT REQUIRES THE SERVICES OF THE ENGINEER. DRAWINGS ARE SUBJECT TO COPYRIGHT AND MAY NOT BE REPRODUCED, DISTRIBUTED, PUBLISHED OR USED IN ANY WAY WITHOUT THE EXPRESS WRITTEN CONSENT OF ROBERT D. ANDERSON, P.E.

STATE OF TEXAS
ROBERT D. ANDERSON
44987
LICENSED PROFESSIONAL ENGINEER
Robert D. Anderson 05/12/25
Firm No. F-5324

PREPARED FOR: McDonald's USA, LLC
© 2024 McDonald's USA, LLC
These drawings and specifications are the confidential and proprietary property of McDonald's USA, LLC and shall not be copied or reproduced without written authorization. The contract documents were prepared for use on the specific site configuration which is issued date and are for submittal purposes only. If the site configuration which is issued date and these drawings for reference or example on another project, requires the services of a qualified licensed architect and engineer. Reproduction of the contract documents for reuse on another project is not authorized.

DRAWN BY MES
STD. ISSUE DATE 2024
REVIEWED BY JAW
DATE ISSUED 10/11/2024

TITLE 2024 STANDARD BUILDING – BB20
4584–WOOD/WOOD

DESCRIPTION
WOOD BEARING WALLS WITH HARDIE SIDING
WOOD ROOF TRUSS FRAMING
EIFS/BATTEN/METAL/HARDIE SIDING EXTERIOR FINISHES

SITE ID 042–3591
SITE ADDRESS NWC OF FM 460 & FM 740, FORNEY TEXAS

JAWA 24–0151

SHEET NO. P1.3
UNDERGROUND PLUMBING

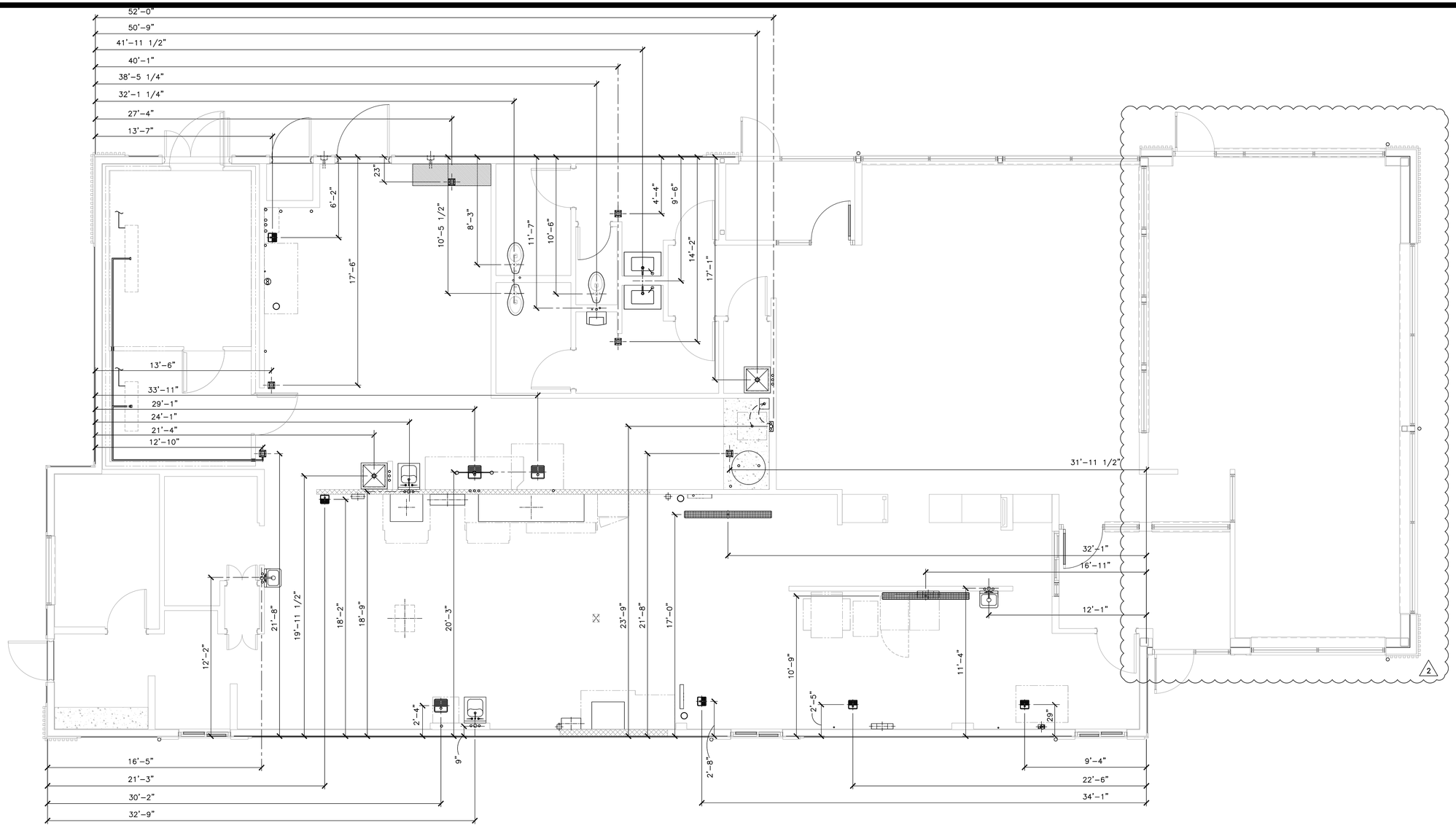

1 P1.4 UNDERGROUND ROUGH-IN

SCALE: 1/4" = 1'-0"

1

DRAWING NOTES

1. THIS PLAN IS PROVIDED AS A GUIDE FOR THE PLUMBING CONTRACTOR. ALL DIMENSIONS ARE ROUNDED TO THE NEAREST ¼" AND ARE TAKEN FROM THE OUTSIDE EDGE OF THE FOUNDATION WALL TO CENTERLINE OF SLAB PENETRATION.

REV	DATE	DESCRIPTION	BY
1	04/08/2025	COUNTY COMMENTS, M&O QC COMMENTS, & UTILITY COORDINATION	
2	05/09/2025	PLAYPLACE ADDITION	

Robert D. Anderson ,Inc.
MEP Engineering & Design Consultants
HVAC/Illumination/Plumbing/Power Distribution/Controls

Robert D. Anderson
4403 Zion Rd.
Garland ,TX 75043

voice: 972-814-7324
email: robert.d.anderson@sbcglobal.net
contact: Mark Swanson-Project Manager
voice: 817-556-0986
email: mark@mepdesignrts.com

DRAWING IS DIAGRAMMATIC, AND AS SUCH ADJUSTMENTS FOR UNKNOWN FIELD CONDITIONS MAY BE REQUIRED. THIS DRAWING WAS PREPARED FOR SPECIFIC USE ON THE DATE AND SITE INDICATED HEREON. ANY REUSE OF THIS DRAWING FOR OTHER SITES OR ANY OTHER PROJECT REQUIRES THE REVISION OF THE ENGINEER. DRAWINGS ARE SUBJECT TO COPYRIGHT AND MAY NOT BE REPRODUCED, DISTRIBUTED, PUBLISHED OR USED IN ANY WAY WITHOUT THE EXPRESS WRITTEN CONSENT OF ROBERT D. ANDERSON, P.E.

STATE OF TEXAS
ROBERT D. ANDERSON
44987
LICENSED PROFESSIONAL ENGINEER
05/12/25
Firm No. F-5324

PREPARED FOR:
McDonald's USA, LLC

© 2024 McDonald's USA, LLC
These drawings and specifications are the confidential and proprietary property of McDonald's USA, LLC and shall not be copied or reproduced without written authorization. The contract documents were prepared for use on this specific site in conjunction with its issue date, and are not suitable for use on any other project or at a future date, and these drawings for reference or example on another project requires the services of properly licensed architect and engineer. Reproductions of the contract documents for reuse on another project is not authorized.

DRAWN BY: MES
STD ISSUE DATE: 2024
REVIEWED BY: JAW
DATE ISSUED: 10/11/2024

TITLE: 2024 STANDARD BUILDING - BB20 4584-WOOD/WOOD

DESCRIPTION: WOOD BEARING WALLS WITH HARDIE SIDING
WOOD ROOF TRUSS FRAMING
EIFS/BATTEN/METAL/HARDIE SIDING EXTERIOR FINISHES

SITE ID: 042-3591
SITE ADDRESS: NWC OF FM 460 & FM 740, FORNEY TEXAS

JAWA 24-0151

SHEET NO.: P1.4
UNDERGROUND ROUGH-IN

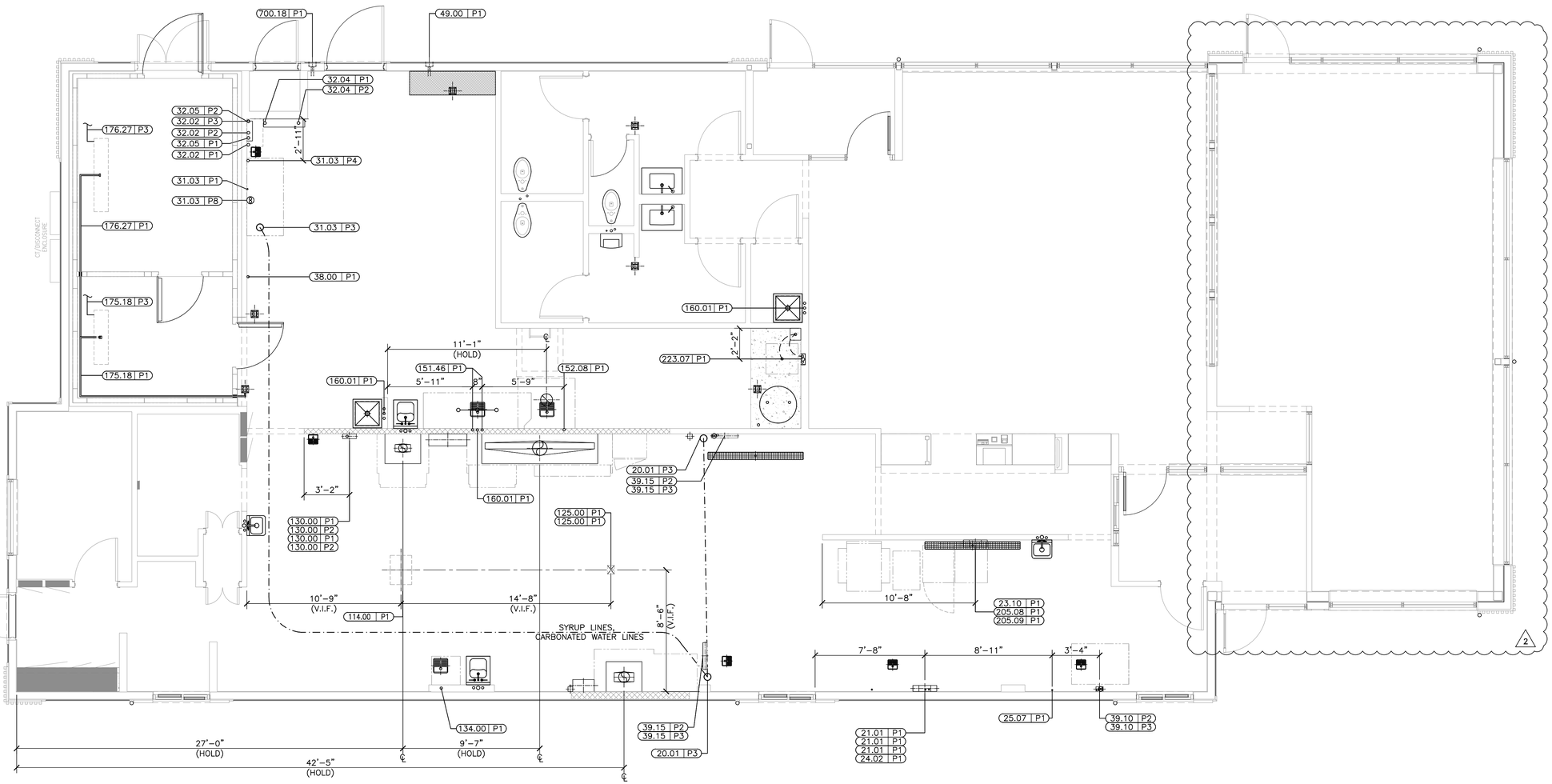

1 P1.6 OVERHEAD ROUGH-IN

SCALE: 1/4" = 1'-0"

PLUMBING SCHEDULE

VIF = Verify in Field
PC = Plumbing Contractor
BSI = Beverage System Installer

TAG #	QTY	DESCRIPTION	GAS TYPE	GAS BTU	GAS SIZE	HW	CW	MISC PLBG	HGT AFF	DRAIN	REQUIREMENTS & REMARKS
020.01P3	2	AUTOMATED BEVERAGE SYSTEM 2.0	–	–	–	–	–	SODA BUNDLE	SEE RMKS	–	DN CHASE FROM SODA SYSTEM – "T" FROM D/T – BSI TO MAKE FINAL CONNECTIONS PER LOCAL CODES
021.01P1	3	COFFEE BREWER (GLASS DECANTERS)	–	–	–	–	1/4" TRTD	–	SEE RMKS	–	DN CHASE FROM SODA SYSTEM – IF NO CHASE RUN IN 2"COND TO JB –BSI TO CONN CW LINE PER LOCAL CODES. 1/4" R.O. WATER OPTIONAL
023.10P1	1	ESPRESSO BREWER	–	–	–	–	3/8" R.O.	–	SEE RMKS	3/8" IND	DN CHASE FROM R.O. SYSTEM – IF NO CHASE RUN IN 2"COND TO JB –BSI TO CONN CW LINE PER LOCAL CODES
024.02P1	1	JUICE DISPENSER	–	–	–	–	1/2" FLTR	–	SEE RMKS	–	–
025.07P1	1	INFUSION TEA BREWER – MIS	–	–	–	–	1/2" TRTD	3/8" CO2	SEE RMKS	–	DN CHASE FROM SODA SYSTEM – IF NO CHASE RUN IN 2"COND TO JB –BSI TO CONN CW LINE PER LOCAL CODES
031.03P1	1	SODA SYSTEM PACKAGE B.I.B.(RECIRCULATING– 3 TOWERS)	–	–	–	–	–	3/8" OUTLET	SEE RMKS	–	FLEX LINE OVERHEAD TO VARIOUS EQUIP. BSI TO MAKE FINAL CONN PER LOCAL CODES
031.03P3	1	SODA SYSTEM PACKAGE B.I.B.(RECIRCULATING– 3 TOWERS)	–	–	–	–	–	SODA BUNDLE	SEE RMKS	–	OVERHEAD TO SODA TOWER CHASE(S) – BSI TO MAKE FINAL CONNECTIONS PER LOCAL CODES
031.03P4	1	SODA SYSTEM PACKAGE B.I.B.(RECIRCULATING– 3 TOWERS)	–	–	–	–	3/4"	–	1'–6"	3/4" IND	BSI TO MAKE CONNECTION FROM BACKFLOW PREVENTER (VERIFY HEIGHT IN FIELD)
031.03P8	1	SODA SYSTEM PACKAGE B.I.B.(RECIRCULATING– 3 TOWERS)	–	–	–	–	–	REFRIG LINES	SEE RMKS	–	FROM REMOTE CONDENSING UNIT
032.02P1	1	REVERSE OSMOSIS WATER FILTRATION SYSTEM – TANKLESS	–	–	–	–	3/8" FLTR	–	SEE RMKS	–	FLEX LINE OVERHEAD FROM SODA SYSTEM –BSI TO MAKE FINAL CONN PER LOCAL CODES
032.02P2	1	REVERSE OSMOSIS WATER FILTRATION SYSTEM – TANKLESS	–	–	–	–	–	3/8" OUTLET	SEE RMKS	–	FLEX LINE OVERHEAD TO RAPID STEAMER, ESPRESSO, AND COFFEE (OPT.) –BSI TO MAKE FINAL CONN PER LOCAL CODES
032.02P3	1	REVERSE OSMOSIS WATER FILTRATION SYSTEM – TANKLESS	–	–	–	–	–	–	–	1/4" WASTE	–
032.04P1	1	WATER FILTRATION SYSTEM	–	–	–	–	–	3/4" INLET	6'–0"	–	–
032.04P2	1	WATER FILTRATION SYSTEM	–	–	–	–	–	3/4" OUTLET	–	–	3/4" GHT RINSE CONN. FLEX LINE OVHD. TO RAPID STEAMER, ESPRESSO, & COFFEE (OPT.) –BSI TO MAKE FINAL CONN PER LOCAL CODE
032.05P1	1	WATER FILTRATION SYSTEM	–	–	–	–	–	3/4" INLET	SEE RMKS	–	FLEX LINE OVERHEAD FROM R.O. SYSTEM –BSI TO MAKE FINAL CONN PER LOCAL CODES
032.05P2	1	WATER FILTRATION SYSTEM	–	–	–	–	–	3/4" OUTLET	SEE RMKS	–	FLEX LINE OVERHEAD TO COMBI OVENS AND STAGING CABINET –BSI TO MAKE FINAL CONN PER LOCAL CODES
038.00P1	1	CLEAN IN PLACE PANEL	–	–	–	–	1/2" FLTR	–	6'–0"	–	FOR CLEANING BULK COKE TANKS. INSTALL HEIGHT TO BOTTOM OF UNIT
039.10P2	1	ICE MACHINE – 1400 LB.	–	–	–	–	1/2" TRTD	–	SEE RMKS	3/4" IND	WATER LINE OVERHEAD FROM SODA SYSTEM – BSI TO MAKE FINAL CONNECTIONS PER LOCAL CODES

VIF = Verify in Field
PC = Plumbing Contractor
BSI = Beverage System Installer

PLUMBING SCHEDULE

TAG #	QTY	DESCRIPTION	GAS TYPE	GAS BTU	GAS SIZE	HW	CW	MISC PLBG	HGT AFF	DRAIN	REQUIREMENTS & REMARKS
039.10P3	1	ICE MACHINE – 1400 LB.	–	–	–	–	–	REFRIG LINES	–	–	REFRIGERATION LINES OVERHEAD FROM REMOTE CONDENSING UNIT
039.15P2	2	ICE MACHINE – 1000 LB.	–	–	–	–	1/2" TRTD	–	SEE RMKS	3/4" IND	WATER LINE OVERHEAD FROM SODA SYSTEM – BSI TO MAKE FINAL CONNECTIONS PER LOCAL CODES
039.15P3	2	ICE MACHINE – 1000 LB.	–	–	–	–	–	REFRIG LINES	–	–	REFRIGERATION LINES OVERHEAD FROM REMOTE CONDENSING UNIT
049.00P1	1	CO2 FILL BOX	–	–	–	–	–	–	3'–4"	–	HEIGHT IS TO BOTTOM OF FILL BOX;SUPPLIED BY MANUFACTURER;INSTALLED BY G.C. SEE BUILDING ELEVATIONS.
114.00P1	1	HUMIDIFIED HOLDING CABINET	–	–	–	–	3/8" R.O.	–	SEE RMKS	–	BSI EXTENDS CW LINE OVERHEAD FROM R.O. SYSTEM & TERM. W/QUICK DISCONN. AND SHUTOFF
125.00P1	2	RAPID BUN STEAMER	–	–	–	–	3/8" R.O.	–	SEE RMKS	–	BSI EXTENDS CW LINE FROM R.O. SYSTEM & TERM. W/QUICK DISCONN.
130.00P1	2	COMBI OVEN	–	–	–	–	1/2" FLTR	–	SEE RMKS	1 1/2" IND	BSI EXTENDS CW LINE OVERHEAD FROM SODA SYSTEM & TERM. W/QUICK DISCONN. AND SHUTOFF
130.00P2	2	COMBI OVEN	–	–	–	–	3/8" R.O.	–	SEE RMKS	–	BSI EXTENDS CW LINE OVERHEAD FROM R.O. SYSTEM & TERM. W/QUICK DISCONN. AND SHUTOFF
134.00P1	1	VEGETABLE SINK	–	–	–	–	3/4"	–	1'–10"	1–1/2" IND	–
151.46P1	1	SOILED DISHTABLE – RIGHT HAND – 90.5" WIDE	–	–	–	3/4" 140	3/4"	–	1'–6"	–	PC MAKES FINAL CONNECTIONS PER LOCAL CODE
152.08P1	1	WAREWASHER – HIGH TEMP	–	–	–	–	3/4"	–	SEE RMKS	1" INDIRECT	PC TO PROVIDE HW, CW, INDIRECT DRAIN PIPING AND MAKE ALL FINAL CONNECTIONS. CW @ 1'–0" AFF, DRAIN @ 36"
160.01P1	3	CHEMICAL SYSTEM	–	–	–	3/4" 110	–	–	SEE RMKS	–	PC TO PROVIDE 3/4" MHT. FINAL CONNECTIONS BY EQUIPMENT INSTALLER PER LOCAL CODE. SEE SHEET P3.0 FOR INSTALLATION HEIGHT
175.18P1	1	COOLER EVAPORATOR	–	–	–	–	–	–	–	3/4" COND.	PC TO ROUTE CONDENSATE DRAIN LINE TO FLOOR DRAIN. PC TO LIQUID–TIGHT SEAL OPENING FOR LINE EXITING BOX
175.18P3	1	COOLER EVAPORATOR	–	–	–	–	–	REFRIG LINES	–	–	RUN TO REMOTE CONDENSING UNIT–INSULATE FULL RUN LENGTH –INSTALLED BY REFRIG. CONTRACTOR
176.27P1	1	FREEZER EVAPORATOR	–	–	–	–	–	–	–	3/4" COND.	PC TO ROUTE CONDENSATE DRAIN LINE TO FLOOR DRAIN. PC TO LIQUID–TIGHT SEAL OPENING FOR LINE EXITING BOX. HEAT TAPE BY REF.
176.27P3	1	FREEZER EVAPORATOR	–	–	–	–	–	REFRIG LINES	–	–	RUN TO REMOTE CONDENSING UNIT–INSULATE FULL RUN LENGTH–INSTALLED BY REFRIG. CONTRACTOR
205.08P1	1	BIC MACHINE	–	–	–	–	1/2" FLTR	–	SEE RMKS	1" IND	DN CHASE. IF NO CHASE RUN IN 2"COND TO JB –BSI TO CONNECT LINES PER LOCAL CODES
205.09P1	1	FROZEN BEVERAGE DISPENSER	–	–	–	–	1/2" FLTR	3/8" CO2	SEE RMKS	–	DN CHASE. IF NO CHASE RUN IN 2"COND TO JB –BSI TO CONNECT LINES PER LOCAL CODES
223.07P1	1	WASHER	–	–	–	3/4" 140	3/4"	–	4'–0"	1 1/2" D	SEE PLUMBING DWGS FOR WALL BOX. INSTALL HEIGHT IS TO BOTTOM OF THE BOX
700.18P1	1	BULK OIL FILL BOX	–	–	–	–	–	–	3'–4"	–	HEIGHT IS TO BOTTOM OF FILL BOX;SUPPLIED BY MANUFACTURER;INSTALLED BY G.C. SEE BUILDING ELEVATIONS.

REV	DATE	DESCRIPTION	BY
1	04/08/2025	COUNTY COMMENTS, M/O QC COMMENTS, & UTILITY COORDINATION	
2	05/09/2025	PLAYPLACE ADDITION	

Robert D. Anderson ,Inc.
MEP Engineering & Design Consultants
HVAC*Illumination*Plumbing*Power Distribution*Controls

Robert D. Anderson
4403 Zion Rd.
Garland ,TX 75043

voice: 972-814-7324
email: robert.d.anderson@sbcglobal.net
contact: Mark Swanson-Project Manager
voice: 817-556-0986
email: mark@mepdesignrx.com

DRAWING IS DIAGRAMMATIC, AND AS SUCH ADJUSTMENTS FOR UNKNOWN FIELD CONDITIONS MAY BE REQUIRED. THIS DRAWING WAS PREPARED FOR SPECIFIC USE ON THE DATE AND SITE INDICATED HEREON. ANY USE OF THIS DRAWING ON ANY OTHER SITE OR FOR ANY OTHER PROJECT REQUIRES THE SERVICES OF THE ENGINEER. DRAWINGS ARE SUBJECT TO COPYRIGHT AND MAY NOT BE REPRODUCED, DISTRIBUTED, PUBLISHED OR USED IN ANY WAY WITHOUT THE EXPRESS WRITTEN CONSENT OF ROBERT D. ANDERSON, P.E.

STATE OF TEXAS
ROBERT D. ANDERSON
44987
LICENSED PROFESSIONAL ENGINEER
05/12/25
Firm No. F-5324

PREPARED FOR:
McDonald's USA, LLC

© 2024 McDonald's USA, LLC
These drawings and specifications are the confidential and proprietary property of McDonald's USA, LLC and shall not be copied or reproduced without written authorization. The contract documents were prepared for use on this specific site in connection with its issued date and are not suitable for use on other projects or sites. Re-use of or modifications to these drawings for reference or example on another project requires the services of properly licensed architects and/or engineers. Reproduction of the contract documents for reuse on another project is not authorized.

DRAWN BY: MES
STD ISSUE DATE: 2024
REVIEWED BY: JAW
DATE ISSUED: 10/11/2024

TITLE: 2024 STANDARD BUILDING – BB20
4584–WOOD/WOOD

DESCRIPTION: WOOD BEARING WALLS WITH HARDIE SIDING
WOOD ROOF TRUSS FRAMING
EIFS/BATTEN/METAL/HARDIE SIDING EXTERIOR FINISHES

SITE ID: 042–3591
SITE ADDRESS: NWC OF FM 460 & FM 740, FORNEY TEXAS

JAWA 24–0151

SHEET NO. P1.6
OVERHEAD ROUGH–IN

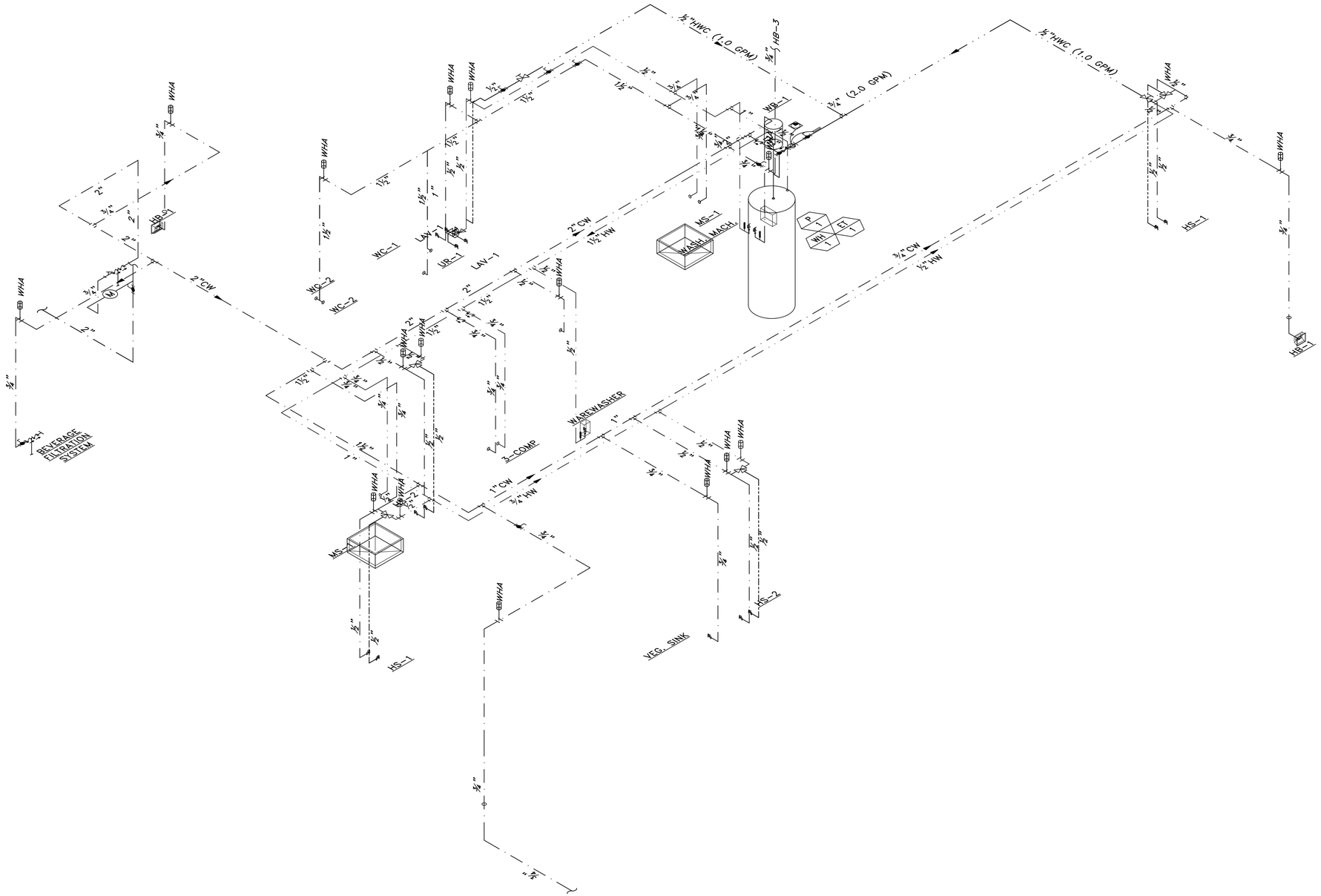

1 P2.0 DOMESTIC WATER PIPING ISOMETRIC

SCALE: NONE

REV	DATE	DESCRIPTION	BY

Robert D. Anderson ,Inc.
MEP Engineering & Design Consultants
HVAC*Illumination*Plumbing*Power Distribution*Controls

Robert D. Anderson
4403 Zion Rd.
Garland ,TX 75043

voice: 972-814-7324
email: robert.d.andersonrbe@cgl.net
contact: Mark Swanson-Project Manager
voice: 817-556-0986
email: mark@mepdesigntx.com

DRAWING IS DIAGRAMMATIC, AND AS SUCH ADJUSTMENTS FOR UNKNOWN FIELD CONDITIONS MAY BE REQUIRED. THIS DRAWING WAS PREPARED FOR SPECIFIC USE ON THE DATE AND SITE INDICATED HEREON. ANY REUSE OF THIS DRAWING FOR OTHER PURPOSES OR ON OTHER PROJECT REQUIRES THE SERVICES OF THE ENGINEER. DRAWINGS ARE SUBJECT TO COPYRIGHT AND MAY NOT BE REPRODUCED, DISTRIBUTED, PUBLISHED OR USED IN ANY WAY WITHOUT THE EXPRESS WRITTEN CONSENT OF ROBERT D. ANDERSON, P.E.

STATE OF TEXAS
ROBERT D. ANDERSON
44987
LICENSED PROFESSIONAL ENGINEER
Firm No. F-5324 09/24/24

PREPARED FOR:
McDonald's USA, LLC
© 2024 McDonald's USA, LLC
These drawings and specifications are the confidential and proprietary property of McDonald's USA, LLC and shall not be copied or reproduced without written authorization. The contract documents were prepared for use on this specific site in connection with the issuance date and are not suitable for use on other projects or at other locations. Use of these drawings for reference or example on another project requires the services of properly licensed architects and engineers. Reproduction of the contract documents for reuse on another project is not authorized.

DRAWN BY	MES
STD ISSUE DATE	2024
REVIEWED BY	JAW
DATE ISSUED	10/11/2024

TITLE: 2024 STANDARD BUILDING – BB20 4584–WOOD/WOOD

DESCRIPTION: WOOD BEARING WALLS WITH HARDIE SIDING
WOOD ROOF TRUSS FRAMING
EIFS/BATTEN/METAL/HARDIE SIDING EXTERIOR FINISHES

SITE ID: 042–3591
SITE ADDRESS: NWC OF FM 460 & FM 740, FORNEY TEXAS

JAWA 24–0151

SHEET NO. P2.0
DOMESTIC WATER ISOMETRIC

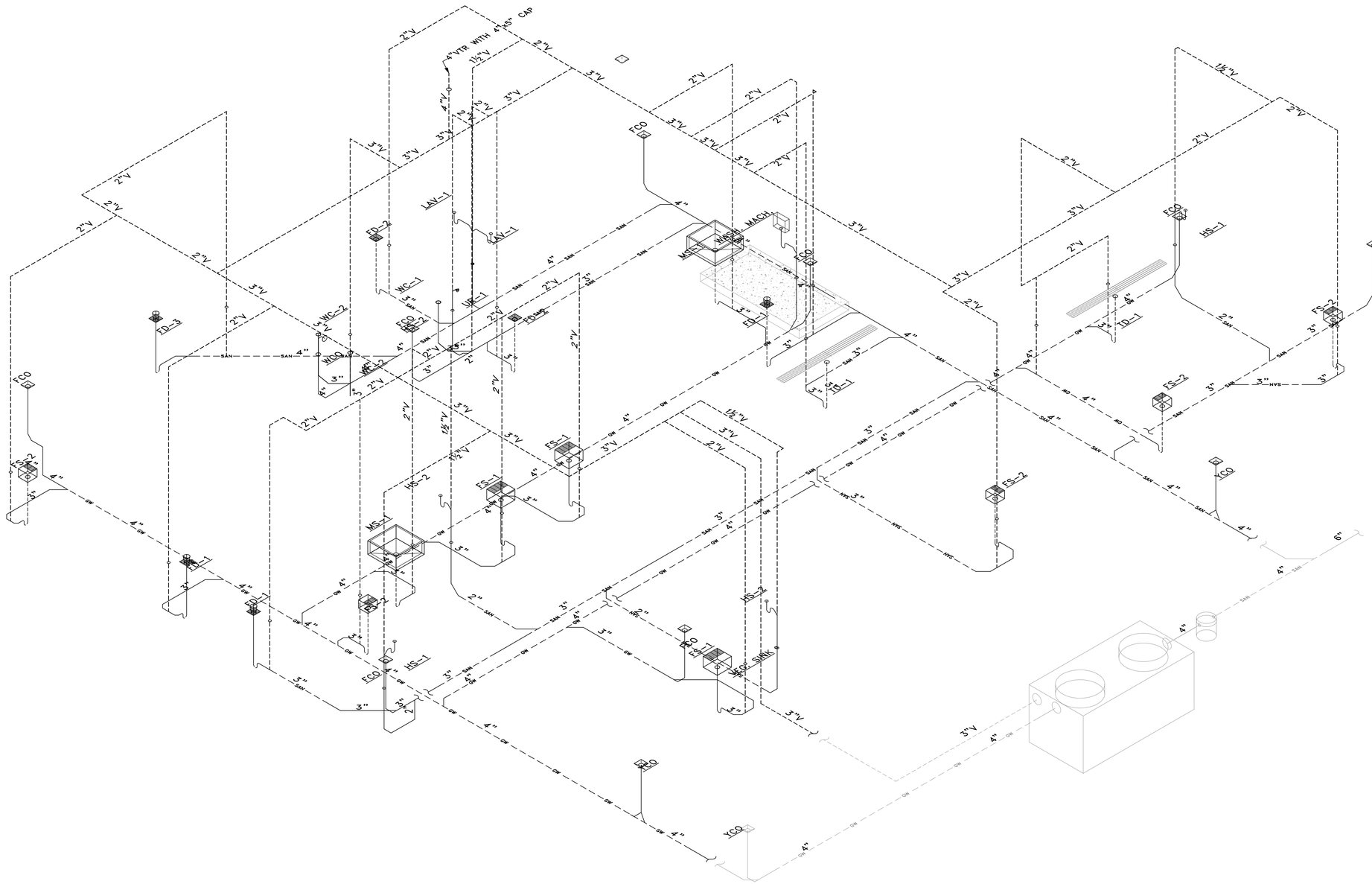

1 P2.1 WASTE & VENT PIPING ISOMETRIC

SCALE: NONE

REV	DATE	DESCRIPTION	BY
1	04/08/2025	COUNTY COMMENTS, MCD OC COMMENTS, & UTILITY COORDINATION	

Robert D. Anderson ,Inc.
MEP Engineering & Design Consultants
HVAC*Illumination*Plumbing*Power Distribution*Controls

Robert D. Anderson
4403 Zion Rd.
Garland ,TX 75043

voice: 972-814-7324
email: robert.d.andersonrdbe@gmail.net
contact: Mark Swanson-Project Manager
voice: 817-556-0986
email: mark@mepdesignrts.com

DRAWING IS DIAGRAMMATIC, AND AS SUCH ADJUSTMENTS FOR UNKNOWN FIELD CONDITIONS MAY BE REQUIRED. THIS DRAWING WAS PREPARED FOR SPECIFIC USE ON THE DATE AND SITE INDICATED HEREON. ANY REUSE OF THE DRAWING FOR OTHER PURPOSES OR ON OTHER PROJECT REQUIRES THE SERVICES OF THE ENGINEER. DRAWINGS ARE SUBJECT TO COPYRIGHT AND MAY NOT BE REPRODUCED, DISTRIBUTED, PUBLISHED OR USED IN ANY WAY WITHOUT THE EXPRESS WRITTEN CONSENT OF ROBERT D. ANDERSON, P.E.

STATE OF TEXAS
ROBERT D. ANDERSON
44987
LICENSED PROFESSIONAL ENGINEER
04/04/25
Firm No. F-5324

PREPARED FOR:
McDonald's USA, LLC

© 2024 McDonald's USA, LLC

These drawings and specifications are the confidential and proprietary property of McDonald's USA, LLC and shall not be copied or reproduced without written authorization. The contract documents were prepared for use on this specific site for construction with its issue date only and not for any other purpose or project. Modification of these drawings for reference or example on another project requires the services of properly registered architects and engineers. Reproduction of the contract documents for reuse on another project is not authorized.

DRAWN BY: MES
STD ISSUE DATE: 2024
REVIEWED BY: JAW
DATE ISSUED: 10/11/2024

TITLE: 2024 STANDARD BUILDING – BB20
4584–WOOD/WOOD

DESCRIPTION:
WOOD BEARING WALLS WITH HARDIE SIDING
WOOD ROOF TRUSS FRAMING
EIFS/BATTEN/METAL/HARDIE SIDING EXTERIOR FINISHES

SITE ID: 042–3591
SITE ADDRESS: NWC OF FM 460 & FM 740, FORNEY TEXAS

JAWA 24–0151

SHEET NO.
P2.1
WASTE & VENT ISOMETRIC

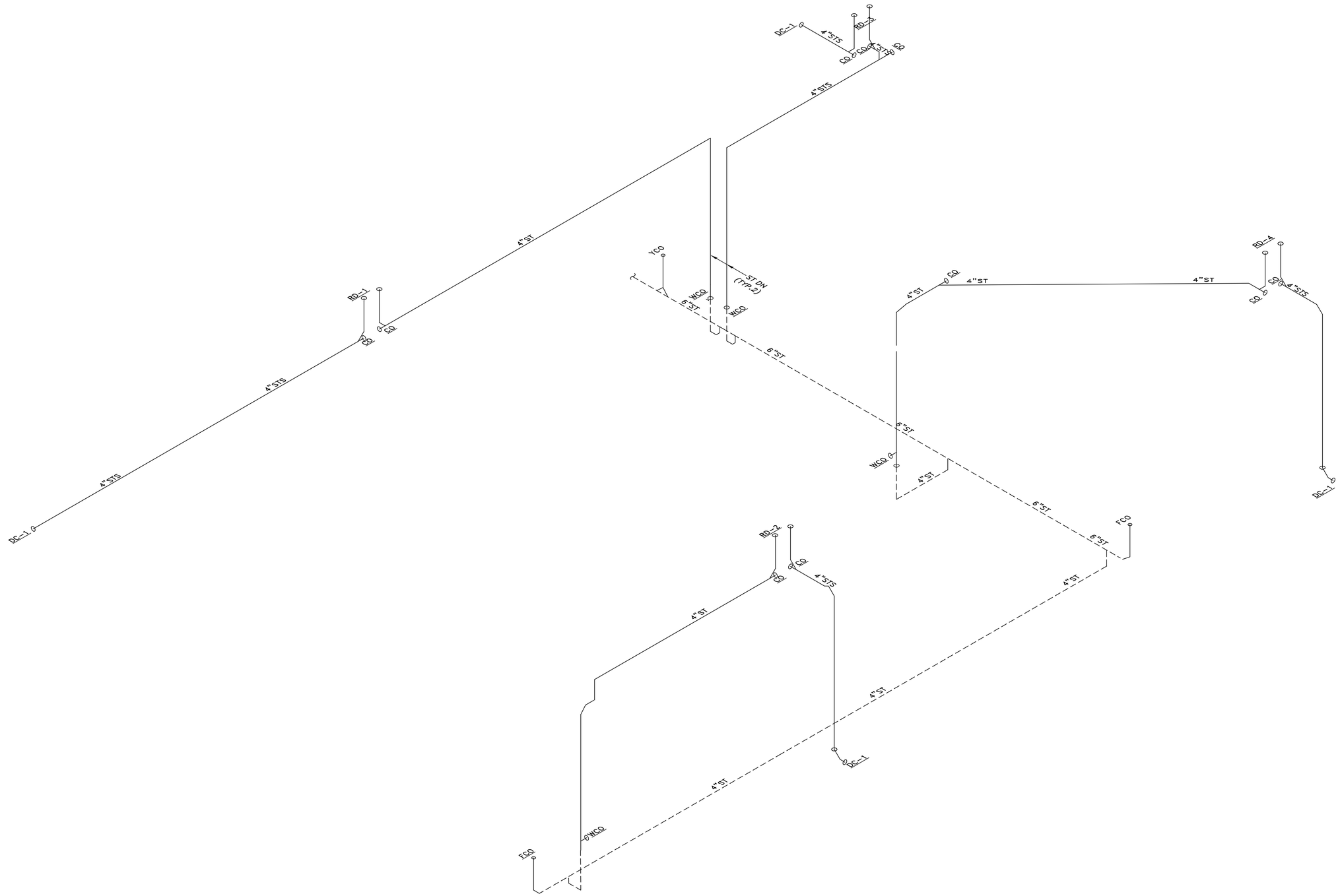

1 P2.2 STORM PIPING ISOMETRIC

SCALE: NONE

1

REV	DATE	DESCRIPTION	BY
1	04/08/2025	COUNTY COMMENTS, MCD OC COMMENTS, & UTILITY COORDINATION	

Robert D. Anderson ,Inc.
MEP Engineering & Design Consultants
HVAC*Illumination*Plumbing*Power Distribution*Controls

Robert D. Anderson
4403 Zion Rd.
Garland ,TX 75043

voice: 972-814-7324
email: robert.d.anderson@sbcglobal.net
contact: Mark Swanson-Project Manager
voice: 817-556-0986
email: mark@mepdesigntx.com

DRAWING IS DIAGRAMMATIC, AND AS SUCH ADJUSTMENTS FOR UNKNOWN FIELD CONDITIONS MAY BE REQUIRED. THIS DRAWING WAS PREPARED FOR SPECIFIC USE ON THE DATE AND SITE INDICATED HEREON. ANY USE OF THIS DRAWING ON OTHER SITES OR FOR OTHER THAN THIS PROJECT REQUIRES THE SERVICES OF THE ENGINEER. DRAWINGS ARE SUBJECT TO COPYRIGHT AND MAY NOT BE REPRODUCED, DISTRIBUTED, PUBLISHED OR USED IN ANY WAY WITHOUT THE EXPRESS WRITTEN CONSENT OF ROBERT D. ANDERSON, P.E.

STATE OF TEXAS
ROBERT D. ANDERSON
44987
PROFESSIONAL ENGINEER
Robert D. Anderson 04/04/25
Firm No. F-5324

PREPARED FOR:
McDonald's USA, LLC

© 2024 McDonald's USA, LLC
These drawings and specifications are the confidential and proprietary property of McDonald's USA, LLC and shall not be copied or reproduced without written authorization. The contract documents were prepared for use on this specific site in conjunction with its issue date and are not suitable for use on other sites or with later issue dates. Use of these drawings for reference or example on another project requires the permission of properly licensed architects and engineers. Modification of the contract documents for reuse on another project is not authorized.

DRAWN BY	MES
STD ISSUE DATE	2024
REVIEWED BY	JAW
DATE ISSUED	10/11/2024

TITLE
2024 STANDARD BUILDING – BB20
4584–WOOD/WOOD

DESCRIPTION
WOOD BEARING WALLS WITH HARDIE SIDING
WOOD ROOF TRUSS FRAMING
EIFS/BATTEN/METAL/HARDIE SIDING EXTERIOR FINISHES

SITE ID	SITE ADDRESS
042–3591	NWC OF FM 460 & FM 740, FORNEY TEXAS

SHEET NO.
JAWA 24–0151
P2.2
STORM ISOMETRIC

FIXTURE INFORMATION:

NAME	TYPE	FLOW RATE	OTHER	QTY.
3–COMP. SINK	3–COMPARTMENT SINK	GPM (1–MINUTE DRAIN TIME): 46.636 GPM (2–MINUTE DRAIN TIME): 21.818	DFU: 6 CAPACITY: 58.182 GAL.	1
FLOOR SINK/DRAIN	FLOOR SINK	GPM (1–MINUTE DRAIN TIME): 5 GPM (2–MINUTE DRAIN TIME): 2.5	DFU: 2 CAPACITY: 0 GAL.	11
MOP SINK – MS–1	MOP BASIN	GPM (1–MINUTE DRAIN TIME): 22.442 GPM (2–MINUTE DRAIN TIME): 11.221	DFU: 3 CAPACITY: 29.922 GAL.	2
VEGETABLE PREP SINK	PREP SINK ONE BOWL	GPM (1–MINUTE DRAIN TIME): 4.675 GPM (2–MINUTE DRAIN TIME): 2.338	DFU: 2 CAPACITY: 6.234 GAL.	1
WAREWASHER (HOBART AM16–SVLT)	DOOR TYPE 1	GPM (1–MINUTE DRAIN TIME): 60 GPM (2–MINUTE DRAIN TIME): 30	DFU: 2 CAPACITY: 60 GAL.	1
TOTALS:		GPM (1–MINUTE DRAIN TIME): 208.19 GPM (2–MINUTE DRAIN TIME): 104.1	DFU: 38 CAPACITY: 184.26 GAL.	

SIZING DETAILS:

PROJECT INFORMATION
CONSTRUCTIONS TYPE: NEW CONSTRUCTION
ADDITIONAL NOTES: McDONALD'S 4584 BUILDING – PROTOTYPICAL

LOCATION: OUTDOORS
BURIED: YES
HIGH WATER AREA: NO

FLOW RATE CALCULATION:
FLOW RATE TO INTERCEPTOR = (LESSER OF FLOW RATE BY PIPE SIZE AND FLOW RATE BY FIXTURES)
SIZE OF PIPE CONNECTED TO THE GREASE INTERCEPTOR: 4 IN.
DRAINAGE PERIOD: 2 MINUTES
FLOW RATE BY PIPE SIZE: 75 GPM
FLOW RATE BY FIXTURES, 2–MINUTE DRAINAGE PERIOD: 104.097 GPM
FLOW RATE BY FIXTURES, 1–MINUTE DRAINAGE PERIOD: 208.195 GPM
FLOW RATE USED TO SELECT GREASE INTERCEPTOR: 75 GPM
FIXTURE DFU: 38

GREASE OUTPUT:
MENU TYPE: FAST FOOD – FULL PREP
FRYER IN KITCHEN: YES
FOOD WASTE DISPOSER: YES
NUMBER OF SEATS: 43 SEATS
GREASE PRODUCTION VALUE: 0.035 LBS. PER SERVING (6.02 LBS. PER DAY)

30–DAY GREASE PRODUCTION 180.6 LBS.
60–DAY GREASE PRODUCTION: 361.2 LBS.
90–DAY GREASE PRODUCTION: 541.8 LBS.

CALCULATION:
GREASE OUTPUT=(NUMBER OF SEATS)x4(AVERAGE TURNS PER SEAT PER 24 HOURS)x(GREASE PRODUCTION VALUE)x(DAYS BETWEEN PUMP–OUT).

DETAIL 1 / P3.0
GREASE INTERCEPTOR
SCALE: NONE

SPECIFICATIONS
Notes:
1. 4" FPT inlet/outlet with 4" plain end adapters, single inlet and triple outlet.
2. Unit weight - w/ cast iron covers: 528 lbs. (For wet weight add 4,254 lbs.)
3. Maximum operating temperature: 150° F continuous
4. Capacities - Liquid: 510 gal.
   Grease: 3,048 lbs. (417 gal.) @100 GPM
   Solids: 128 gal.
5. Built-in flow control. For series installations, only install flow control on the first unit in the series if necessary.
6. For gravity drainage applications only.
7. Do not use for pressure applications.
8. Cover placement allows full access to tank for proper maintenance.
9. A Vent shall be installed downstream of grease interceptor.
10. Engineered inlet and outlet diffusers with inspection ports are removable to inspect / clean piping.
11. Integral air relief / Anti-siphon / Sampling access.
12. Adjustable cover adapters provide up to 4" of additional height.
13. Designed for below-grade, above-grade, indoor or outdoor installations.
14. Safety Star®, access restrictor built into each cover adapter, prevents accidental entry to tanks (450 lb rating).

ENGINEER SPECIFICATION GUIDE
Schier Great Basin™ grease interceptor model # GB-500 shall be lifetime guaranteed and made in USA of seamless, rotationally-molded polyethylene with minimum 7/16" uniform wall thickness. Flow control cartridge shall be PVC. Interceptor shall be furnished for above or below-grade installation with adjustable cover adapter, Safety Star® access restrictor built into each cover adapter, and three outlet options. Interceptor shall be certified to ASME A112.14.3 (Type C) and CSA B481.1. Interceptor flow rate shall be 100 GPM. Interceptor grease capacity shall be 3,048 lbs. Cover shall provide water/gas-tight seal and have minimum 16,000 lbs. load capacity.

CERTIFIED PERFORMANCE
Great Basin™ hydromechanical grease interceptors are third party performance-tested and listed by IAPMO to ASME A112.14.3 and CSA B481.1 grease interceptor standards and greatly exceed requirements for grease separation and storage. They are compliant to the Uniform Plumbing Code and the International Plumbing Code.

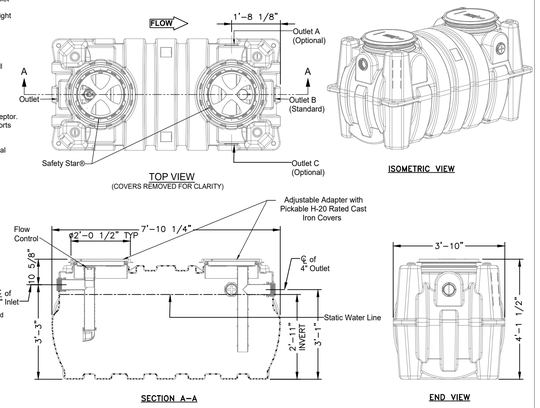

SPECIFICATION SHEET

MODEL NUMBER: GB-500
PART NUMBER: 4075-001-01
DESCRIPTION: GB-500 GREASE INTERCEPTOR 100 GPM, 4" INLET/OUTLET, H-20 RATED CAST IRON COVERS

PROPRIETARY AND CONFIDENTIAL
THE INFORMATION CONTAINED IN THIS DRAWING IS THE SOLE PROPERTY OF SCHIER PRODUCTS. REPRODUCTION IN PART OR WHOLE WITHOUT WRITTEN PERMISSION OF SCHIER PRODUCTS IS PROHIBITED.

DWG BY: C. BUSENITZ DATE: 4/14/2022 REV: - ECO: -

SCHIER
6455 Woodland Dr
Shawnee, KS 66218
Tel: 913-951-3300
Fax: 913-951-3399
schierproducts.com

KEYED NOTES:
1. ACCESS PANEL FOR THERMOSTATIC MIXING VALVE (SEE CHEMICAL SYSTEM INSTALLATION DETAIL)
2. ECOLAB CHEMICAL SYSTEM (SEE CHEMICAL SYSTEM INSTALLATION DETAIL)
3. 24"Wx36"H WALL GUARD (QTY. 2) FURNISHED WITH MOP SINK (SEE PLUMBING FIXTURE SCHEDULE)
4. MOP SINK FAUCET WITH INTEGRAL VACUUM BREAKER (SEE PLUMBING FIXTURE SCHEDULE)
5. HOSE FURNISHED WITH MOP SINK FAUCET (SEE PLUMBING FIXTURE SCHEDULE)
6. HOSE BRACKET FURNISHED WITH MOP FAUCET (SEE PLUMBING FIXTURE SCHEDULE)
7. FLOOR GRATE

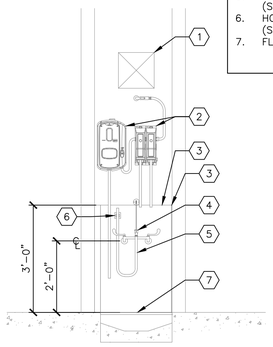

DETAIL 2 / P3.0
RECESSED MOP SINK
SCALE: ½"=1'–0"

KEYED NOTES:
1. FAUCET (SEE PLUMBING FIXTURE SCHEDULE)
2. LAVATORY OR HAND SINK (SEE PLUMBING FIXTURE SCHEDULE)
3. CORIAN COUNTERTOP – TOILET ROOMS ONLY (FURNISHED BY G.C.)
4. LAVATORY CARRIER – TOILET ROOMS ONLY (SEE ARCHITECTURAL DRAWINGS)
5. OUTLINE OF ADA COMPLIANT WRAP (SEE PLUMBING FIXTURE SCHEDULE)
6. THERMOSTATIC MIXING VALVE (SEE VALVE SCHEDULE)
7. HOT WATER AND HWC DOWN WALL (WITH BALANCING VALVE AND CHECK VALVE INSTALLED).
8. COLD WATER DOWN TO MIXING VALVE
9. TEMPERATED WATER TO FIXTURES
10. COLD WATER TO FIXTURES AS APPLICABLE.

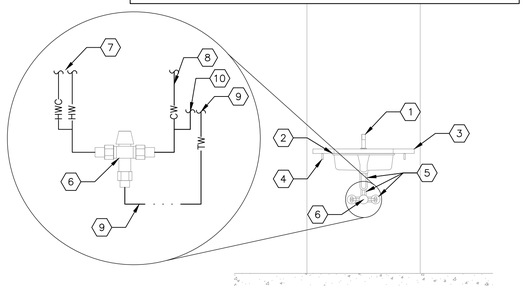

DETAIL 3 / P3.0
LAVATORY (PUBLIC)
SCALE: ½"=1'–0"

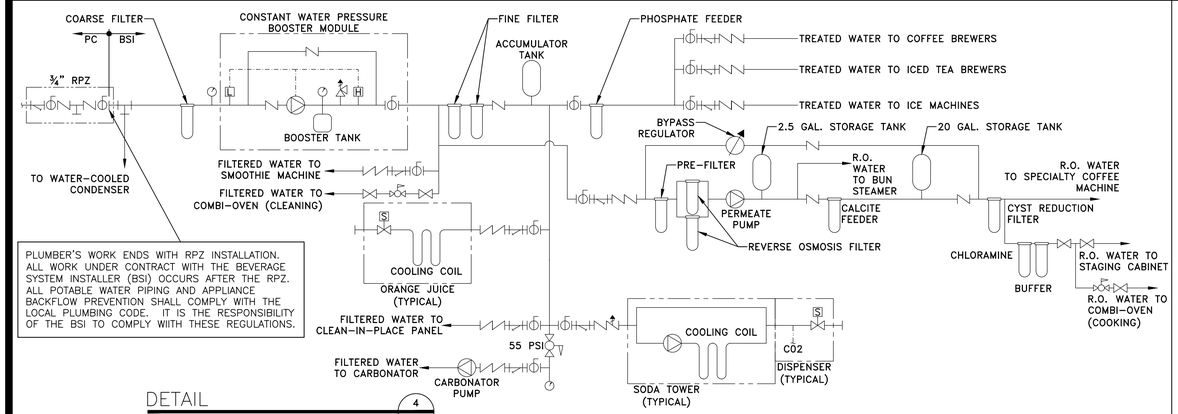

PLUMBER'S WORK ENDS WITH RPZ INSTALLATION. ALL WORK UNDER CONTRACT WITH THE BEVERAGE SYSTEM INSTALLER (BSI) OCCURS AFTER THE RPZ. ALL POTABLE WATER PIPING AND APPLIANCE BACKFLOW PREVENTION SHALL COMPLY WITH THE LOCAL PLUMBING CODE. IT IS THE RESPONSIBILITY OF THE BSI TO COMPLY WITH THESE REGULATIONS.

DETAIL 4 / P3.0
BEVERAGE SYSTEM DISTRIBUTION SCHEMATIC
SCALE: NONE

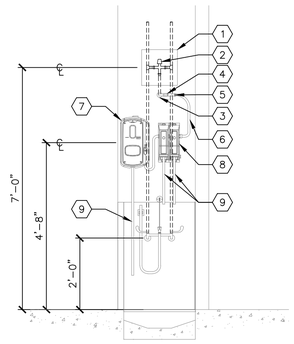

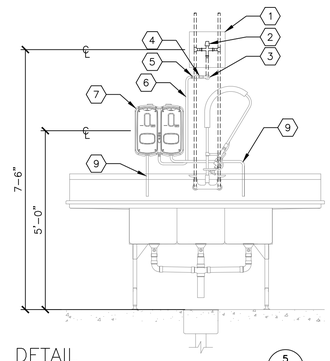

DETAIL 5 / P3.0
CHEMICAL SYSTEM INSTALLATION
SCALE: ½"=1'–0"

KEYED NOTES:
1. 12"x12" ACCESS PANEL (COORDINATE INSTALLATION WITH G.C.)
2. THERMOSTATIC MIXING VALVE SET TO 110°F (SEE VALVE SCHEDULE)
3. PIPE THROUGH WALL WITH ESCUTCHEON PLATE
4. SHUT–OFF VALVE
5. ¾" MHT CONNECTION

PLUMBER'S WORK ENDS AT MHT CONNECTION

6. HOSE TO CHEMICAL SYSTEM
7. ECOLAB SOLIDSENSE CHEMICAL DISPENSER
8. ECOLAB SMARTSHAPE CHEMICAL DISPENSER
9. CHEMICAL DISPENSING HOSE

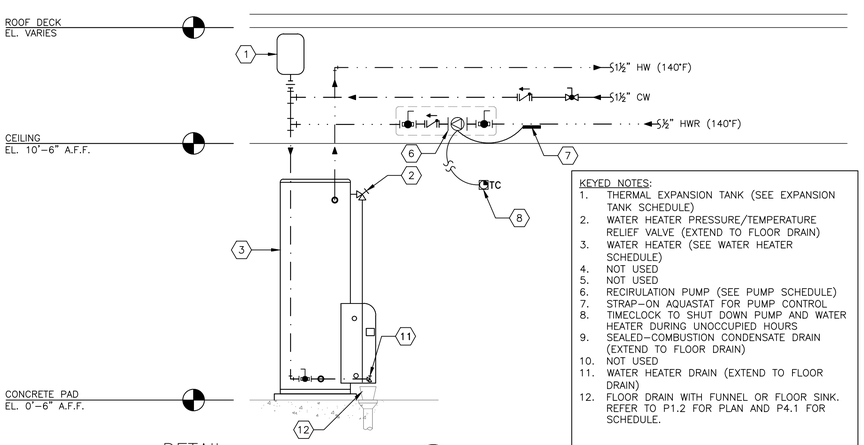

KEYED NOTES:
1. THERMAL EXPANSION TANK (SEE EXPANSION TANK SCHEDULE)
2. WATER HEATER PRESSURE/TEMPERATURE RELIEF VALVE (EXTEND TO FLOOR DRAIN)
3. WATER HEATER (SEE WATER HEATER SCHEDULE)
4. NOT USED
5. NOT USED
6. RECIRULATION PUMP (SEE PUMP SCHEDULE)
7. STRAP–ON AQUASTAT FOR PUMP CONTROL
8. TIMECLOCK TO SHUT DOWN PUMP AND WATER HEATER DURING UNOCCUPIED HOURS
9. SEALED–COMBUSTION CONDENSATE DRAIN (EXTEND TO FLOOR DRAIN)
10. NOT USED
11. WATER HEATER DRAIN (EXTEND TO FLOOR DRAIN)
12. FLOOR DRAIN WITH FUNNEL OR FLOOR SINK. REFER TO P1.2 FOR PLAN AND P4.1 FOR SCHEDULE.

DETAIL 6 / P3.0
WATER HEATER PIPING
SCALE: NONE

KEYED NOTES:
1. INCOMING UNDERGROUND WATER SERVICE SIZED PER DOMESTIC WATER CALCULATIONS. (MIN. 2")
2. BLOCKING AT CHANGES IN DIRECTION
3. MINIMUM ½" ANNULAR CLEARANCE
4. UNION
5. BRONZE STRAINER
6. QUARTER–TURN BALL VALVE
7. REDUCED PRESSURE ZONE (RPZ) ASSEMBLY
8. AIR GAP FOR RELIEF VALVE
9. PIPING FROM AIR GAP TO FLOOR DRAIN
10. GALVANIZED STEEL PIPE SUPPORTS AS REQUIRED
11. 2"x1½" BUSHING
12. 1½" WATER METER
13. FLOOR DRAIN–PITCH FLOOR TOWARDS DRAIN
14. P–TRAP
15. PIPE TO SEWER–PITCH AND VENT PER CODE
16. 2" PIPE FOR WATER SERVICE
17. WATER PIPING FROM 5 FT. FROM BUILDING TO CEILING PENETRATION SHALL BE COPPER.

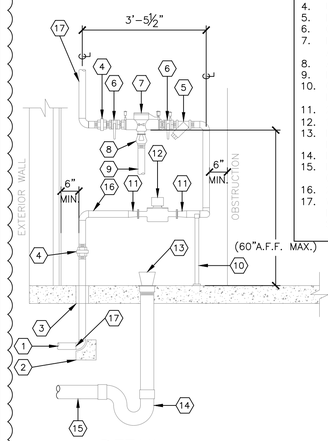

DETAIL 7 / P3.0
INCOMING WATER SERVICE
SCALE: ½"=1'–0"

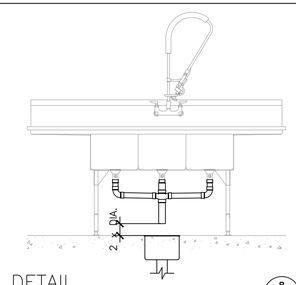

DETAIL 8 / P3.0
INDIRECT DRAINAGE PIPING (TYP.)
SCALE: ½"=1'–0"

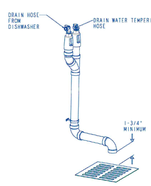

DETAIL 9 / P3.0
WAREWASHER DRAIN AIR GAP KIT
SCALE: NTS

REV	DATE	DESCRIPTION	BY
1	04/08/2025	COUNTY COMMENTS, McD OC COMMENTS, & UTILITY COORDINATION	

Robert D. Anderson ,Inc.
MEP Engineering & Design Consultants
HVAC*Illumination*Plumbing*Power Distribution*Controls
Robert D. Anderson
4403 Zion Rd.
Garland ,TX 75043
voice: 972-814-7324
email: robert.d.anderson@bellsouth.net
contact: Mark Swanson-Project Manager
voice: 817-556-0986
email: mark@mepdesigntx.com

DRAWING IS DIAGRAMMATIC, AND AS SUCH ADJUSTMENTS FOR UNKNOWN FIELD CONDITIONS MAY BE REQUIRED. THIS DRAWING WAS PREPARED FOR SPECIFIC USE ON THE DATE AND SITE INDICATED HEREON. ANY USE OF THIS DRAWING FOR OTHER PURPOSES OR AT OTHER SITES OR PROJECT REQUIRES THE SERVICES OF THE ENGINEER. DRAWINGS ARE SUBJECT TO COPYRIGHT AND MAY NOT BE REPRODUCED, DISTRIBUTED, PUBLISHED OR USED IN ANY WAY WITHOUT THE EXPRESS WRITTEN CONSENT OF ROBERT D. ANDERSON, P.E.

ROBERT D. ANDERSON 44987 TEXAS PROFESSIONAL ENGINEER 04/04/25
Firm No. F-5324

PREPARED FOR: McDonald's USA, LLC
© 2024 McDonald's USA, LLC
These drawings and specifications are the confidential and proprietary property of McDonald's USA, LLC and shall not be copied or reproduced without written authorization. The contract documents were prepared for use on this specific site in conjunction with its issue date and are not suitable for use at other locations or at a later date. Use of these drawings for reference or example on another project requires the services of properly licensed architects and engineers. Reproduction of the contract documents for reuse on another project is not authorized.

DRAWN BY: MES
STD ISSUE DATE: 2024
REVIEWED BY: JAW
DATE ISSUED: 10/11/2024

TITLE: 2024 STANDARD BUILDING – BB20
4584–WOOD/WOOD
DESCRIPTION: WOOD BEARING WALLS WITH HARDIE SIDING
WOOD ROOF TRUSS FRAMING
EIFS/BATTEN/METAL/HARDIE SIDING EXTERIOR FINISHES
SITE ID: 042–3591
SITE ADDRESS: NWC OF FM 460 & FM 740, FORNEY TEXAS

JAWA 24–0151
SHEET NO. P3.0
DETAILS

GENERAL PLUMBING NOTES

GENERAL:

1. ALL WORK PERFORMED SHALL BE IN ACCORDANCE WITH ALL LOCAL CODES AND ACCEPTABLE TO THE AUTHORITY HAVING JURISDICTION.
2. ALL PLUMBING WORK SHALL BE PERFORMED BY A LICENSED PLUMBER.
3. ALL DIMENSIONS, CLEARANCES AND TOLERANCES SHALL BE VERIFIED PRIOR TO INSTALLATION. ALL ROUGH-IN LOCATIONS SHALL BE COORDINATED WITH THE MANUFACTURER'S SUBMITTAL INFORMATION.
4. ALL DIMENSIONAL INFORMATION IS AS FOLLOWS (UNLESS NOTED OTHERWISE):
   A. UNDERGROUND PIPE IS TO FOUNDATION
   B. OVERHEAD PIPE IS TO FINISHED WALL
   C. ELEVATIONS ARE TO FINISHED FLOOR
5. ALL MATERIALS, FIXTURES AND EQUIPMENT USED SHALL BE IN ACCORDANCE WITH McDONALD'S SPECIFICATIONS. SPECIFICATIONS ARE CONTAINED WITHIN THESE DRAWINGS AND THE McDONALD'S PROJECT MANUAL. ANY CONTRACTOR IN NEED OF A COPY OF THE McDONALD'S PROJECT MANUAL SHALL CONTACT THE McDONALD'S AREA CONSTRUCTION MANAGER. ANY VARIANCE FROM THE McDONALD'S SPECIFICATIONS SHALL BE REVIEWED AND APPROVED BY THE ENGINEER-OF-RECORD.
6. SEE COORDINATION SCHEDULE FOR ADDITIONAL SCOPE OF WORK.
7. ALL EQUIPMENT SHALL BE INSTALLED IN ACCORDANCE WITH ITS LISTING AND/OR THE MANUFACTURER'S INSTALLATION INSTRUCTIONS.
8. WHERE POOR SOIL CONDITIONS EXIST OR WHERE SUBSTANTIAL SETTLEMENT OF EITHER THE PIPING, THE BUILDING OR ADJACENT WALKS, PLANTERS, ETC., MAY OCCUR, THE CONTRACTOR SHALL PROVIDE ADEQUATE UNDERSLAB STAINLESS STEEL PIPE HANGERS OR APPROVED OTHER SUPPORT.
9. ALL PIPE SLEEVES SHALL BE PROPERLY SEALED AND INSULATED TO PREVENT HEAT LOSS AND SEEPAGE.
10. ALL PIPE INSULATION SHALL BE PROTECTED FROM DAMAGE FROM PIPE HANGERS. PROTECTION SHALL BE LIGHT GAUGE GALVANIZED STEEL OR EQUAL.
11. ALL PENETRATIONS OF FIRE-RATED WALLS SHALL BE FIRESTOPPED WITH AN APPROVED AND LISTED FIRESTOPPING SYSTEM.

SANITARY AND VENT SYSTEMS:

1. THE BUILDING SANITARY PIPE SHALL BE LOCATED A MINIMUM OF 10 FT. FROM THE INCOMING WATER SERVICE. WHERE A 10 FT. SEPARATION IS NOT POSSIBLE, THE BOTTOM OF THE WATER SERVICE PIPE SHALL BE A MINIMUM OF 12 IN. ABOVE THE TOP OF THE HIGHEST POINT OF THE SANITARY PIPE.
2. ALL SANITARY AND VENT PIPE SHALL BE PVC TYPE DWV, ABS OR CAST-IRON WHERE REQUIRED BY CODE.
3. ALL HORIZONTAL SANITARY PIPE SHALL BE INSTALLED WITH A MINIMUM PITCH AS FOLLOWS:

PIPE SIZE	MIN. SLOPE
2½" OR LESS	¼" PER FT.
3" TO 6"	⅛" PER FT.
8" OR LARGER	⅛" PER FT. (MIN)

4. CLEANOUTS SHALL BE INSTALLED IN ALL HORIZONTAL DRAINAGE PIPE AND SHALL BE LOCATED NOT MORE THAN 100 FT. APART. (UNLESS OTHERWISE DICTATED BY LOCAL CODES).
5. CLEANOUTS SHALL BE INSTALLED AT ALL CHANGES OF DIRECTION GREATER THAN 45 DEGREES. WHERE MORE THAN ONE CHANGE OF DIRECTION OCCURS IN A SINGLE PIPE RUN, ONLY ONE (1) CLEANOUT SHALL BE REQUIRED FOR EVERY 40 FEET OF DEVELOPED LENGTH.
6. CLEANOUTS SHALL BE INSTALLED ON PIPES PRIOR TO ANY SLAB PENETRATION.
7. WHERE PIPING IS LOCATED WITHIN WALL CAVITIES, ACCESS TO THE CLEANOUTS SHALL BE PROVIDED.
8. CLEANOUTS ON 6-IN. AND SMALLER PIPES SHALL BE PROVIDED WITH A CLEARANCE OF NOT LESS THAN 18 IN. CLEANOUTS ON 8-IN. AND LARGER PIPE SHALL BE PROVIDED WITH A CLEARANCE OF NOT LESS THAN 36 IN.
9. ALL SUSPENDED SANITARY AND VENT PIPE SHALL BE SUPPORTED AS FOLLOWS:

MATERIAL	MAX. HORIZ. SPACING	MAX. VERT. SPACING
ABS	4 FT.	10 FT.
PVC (TYPE DWV)	4 FT.	10 FT.
CAST-IRON (<10 FT. PIPE SECTIONS)	5 FT.	15 FT.
CAST-IRON (10 FT. PIPE SECTIONS)	10 FT.	15 FT.

10. ALL PLUMBING FIXTURES SHALL BE VENTED AND THE MAXIMUM DISTANCE FROM THE FIXTURE TRAP TO THE VENT SHALL BE AS FOLLOWS:

TRAP SIZE	SLOPE	DISTANCE
1¼"	¼" PER FT.	2'-6"
1½"	¼" PER FT.	3'-6"
2"	¼" PER FT.	5'-0"
3"	⅛" PER FT.	6'-0"
4" & LARGER	⅛" PER FT.	10'-0"

11. ALL PLUMBING VENTS THROUGH THE ROOF SHALL TERMINATE A MINIMUM OF 12 INCHES ABOVE THE ROOF AND SHALL BE LOCATED A MINIMUM OF 8 FT. FROM ANY PARAPET WALL. WHERE A VENT TERMINATES WITHIN 8 FT. OF A PARAPET WALL, THE VENT SHALL TERMINATE A MINIMUM OF 6 INCHES ABOVE THE PARAPET.
12. ALL PLUMBING VENTS SHALL TERMINATE A MINIMUM OF 10 FT. HORIZONTALLY FROM ANY OUTDOOR AIR INTAKE. WHERE A PLUMBING VENT IS LOCATED WITHIN 10 FT. OF AN INTAKE, THE VENT SHALL TERMINATE A MINIMUM OF 2 FT. ABOVE THE INTAKE.
13. ALL SIDE WALL VENT TERMINATIONS SHALL BE PROTECTED TO PREVENT BIRDS OR RODENTS FROM ENTERING OR BLOCKING THE VENT OPENING.
14. ALL FLOOR DRAINS THAT DO NOT SERVE EQUIPMENT SHALL BE PROTECTED AGAINST DRYING OUT EITHER THROUGH THE INSTALLATION OF A TRAP PRIMER, DEEP SEAL TRAP OR PROSET TRAP GUARD. ALL TRAPS SHALL BE FILLED WITH AN INITIAL LAYER OF COOKING OIL.
15. ALL APPLIANCES SHALL DRAIN TO AN APPROVED SANITARY WASTE RECEPTOR (FLOOR SINK OR FLOOR DRAIN WITH FUNNEL). INDIRECT DRAINAGE FROM AN APPLIANCE SHALL MAINTAIN AN AIR GAP BETWEEN THE PIPE OUTLET AND THE TOP OF THE RECEPTOR. THE MINIMUM DISTANCE BETWEEN THE PIPE OUTLET AND THE TOP OF THE RECEPTOR SHALL BE TWICE THE DIAMETER OF THE APPLIANCE DRAIN PIPE.

GREASE INTERCEPTORS:

1. SEE SITE PLAN FOR THE SIZE AND LOCATION OF THE GREASE INTERCEPTOR.
2. THE GREASE INTERCEPTOR SHALL BE INSTALLED IN A LOCATION THAT IS ACCESSIBLE FOR PUMPING.
3. THE GREASE INTERCEPTOR SHALL BE CONSTRUCTED OF FIBERGLASS OR ROTATIONALLY-MOLDED POLYETHYLENE. GREASE INTERCEPTOR CONSTRUCTION SHALL CONFORM TO ALL LOCAL CODES. CONCRETE GREASE INTERCEPTORS ARE NOT PERMITTED UNLESS REQUIRED BY THE LOCAL AHJ.
4. GREASE INTERCEPTORS SHALL BE GRAVITY OR HYDROMECHANICAL TYPE, SIZED FOR THE APPLICATION LISTED.
5. THE GREASE INTERCEPTOR SHALL BE VENTED.
6. ACCESS TO THE GREASE INTERCEPTOR SHALL BE PROVIDED WITH TWO (2) 24-IN. MANHOLES. COVER SHALL PROVIDE WATER/GAS-TIGHT SEAL AND HAVE A MINIMUM 16,000 LBS. LOAD CAPACITY. ALL SURFACE WATER MUST DRAIN AWAY FROM MANHOLES.
7. PIPING INLET AND OUTLET SIDES SHALL BE CLEARLY LABELED ON THE TOP OF THE GREASE INTERCEPTOR TO INSURE PROPER INSTALLATION.

DOMESTIC SUPPLY SYSTEMS:

1. THE INCOMING WATER SERVICE PIPE SHALL BE LOCATED A MINIMUM OF 10 FT. FROM THE EXITING SANITARY PIPE. WHERE A 10 FT. SEPARATION IS NOT POSSIBLE, THE BOTTOM OF THE WATER SERVICE PIPE SHALL BE A MINIMUM OF 12 IN. ABOVE THE TOP OF THE HIGHEST POINT OF THE SANITARY PIPE.
2. ALL UNDERGROUND SITE PLUMBING SHALL CONFORM TO NSF 61, SHALL BE TYPE K COPPER TUBING OR COPPER PIPE, POLYETHYLENE (PE), PEX OR CPVC. IF CPVC IS USED, FOAM INSULATION SHALL BE INSTALLED AT ALL CHANGES OF DIRECTION TO ACCOUNT FOR EXPANSION AND CONTRACTION.
3. IF PEX PIPING IS USED, ALL MAINS SHALL BE UPSIZED BY 0.5" DIAMETER.
4. INCOMING WATER SERVICE PRESSURE SHOULD BE BETWEEN 50 AND 55 PSI STATIC. WHERE WATER PRESSURE SERVICE EXCEEDS 80 PSI STATIC, AN APPROVED WATER-PRESSURE REDUCING VALVE WITH STRAINER CONFORMING TO ASSE 1003 SHALL BE INSTALLED. WHERE INCOMING WATER PRESSURE IS BELOW 50 PSI STATIC, A PRESSURE BOOSTER SYSTEM SHALL BE INSTALLED.
5. IF THE RESTAURANT HAS A COMBINED WATER AND FIRE SPRINKLER SERVICE, THE INCOMING WATER SERVICE SHALL BE SIZED BASED ON THE FIRE SPRINKLER CONTRACTOR'S HYDRAULIC CALCULATIONS.
6. PROVIDE A MINIMUM ½" ANNULAR CLEARANCE AROUND ALL PIPE SLAB PENETRATIONS.
7. A REDUCED PRESSURE PRINCIPLE BACKFLOW PREVENTER (RPZ) SHALL BE INSTALLED AT THE INCOMING SERVICE WHERE REQUIRED BY CODE. (MIN. 60" A.F.F.)
8. AN EXPANSION TANK SHALL BE INSTALLED ON THE COLD WATER LINE INLET TO THE WATER HEATER. SEE EXPANSION TANK SCHEDULE.
9. ALL WATER SUPPLY PIPE WITHIN 5 FT. OF THE BUILDING AND INSIDE THE BUILDING SHALL COMPLY WITH NSF 61 AND SHALL BE TYPE L COPPER TUBING, COPPER PIPE, PEX OR CPVC PIPE.
10. CPVC PIPE SHALL BE FLOWGUARD GOLD OR FLOWGUARD BENDABLE AS MANUFACTURED BY LUBRIZOL.
11. CPVC PIPE SHALL BE CONNECTED WITH FLOWGUARD GOLD YELLOW LOW-VOC SOLVENT CEMENT AS MANUFACTURED BY IPS WELD-ON OR OATEY.
12. ALL CPVC PIPE SHALL BE INSULATED TO PREVENT EXPOSURE TO GREASE.
13. ALL SUSPENDED PIPE SHALL BE SUPPORTED AS FOLLOWS:

MATERIAL	MAX. HORIZ. SPACING	MAX. VERT. SPACING
COPPER PIPE	12 FT.	10 FT.
COPPER TUBING ≤1¼"	6 FT.	10 FT.
COPPER TUBING >1½"	10 FT.	10 FT.
CPVC ≤1"	3 FT.	10 FT.
CPVC ≥1¼"	4 FT.	10 FT.
PEX ≤1"	3 FT.	10 FT.
PEX ≥1¼"	4 FT.	10 FT.

14. A REDUCED PRESSURE PRINCIPLE BACKFLOW PREVENTER (RPZ) SHALL BE INSTALLED AT THE INLET TO THE WATER FILTRATION SYSTEM. ALL PIPING DOWNSTREAM OF THE RPZ SHALL BE COPPER OR CROSS-LINKED POLYETHYLENE (PEX).
15. ALL DEVICES, APPLIANCES, AND APPARATUS INTENDED TO SERVE SOME SPECIAL FUNCTION (EX.: SODA MACHINE, COFFEE MACHINE, BEVERAGE DISPENSERS, ETC.) SHALL BE PROVIDED WITH PROTECTION AGAINST BACKFLOW AND CONTAMINATION OF THE WATER SUPPLY SYSTEM. ALL BACKFLOW PREVENTION DEVICES SHALL BE ASSE LISTED AND APPROVED FOR THE DEVICE OR APPLIANCE THEY SERVE.
16. ALL WATER SUPPLY LINES SHALL BE PROVIDED WITH A QUARTER-TURN SHUT-OFF VALVE BEFORE FINAL CONNECTION TO EQUIPMENT.
17. QUARTER-TURN SHUT-OFF VALVES SHALL BE INSTALLED UPSTREAM OF ANY INLINE BACKFLOW PREVENTION DEVICE.
18. ALL VALVES AND BACKFLOW PREVENTION DEVICES SHALL BE INSTALLED WITH FITTINGS THAT FACILITATE REMOVAL IN CASE OF FAILURE.
19. ALL OVERHEAD WATER LINES SHALL BE INSULATED PER SCHEDULE THIS SHEET WITH EXTERNAL JACKETED INSULATION AND A MINIMUM INSTALLED R-VALUE OF 3.7.
20. PRIOR TO BUILDING TURNOVER, THE DOMESTIC WATER SUPPLY SYSTEM SHALL BE PURGED OF DELETERIOUS MATERIAL AND DISINFECTED. DISINFECTION SHALL BE DONE IN ACCORDANCE WITH THE LOCAL HEALTH CODE, PLUMBING CODE OR IN ACCORDANCE WITH AWWA C651 OR AWWA C652.

STORM DRAINAGE SYSTEMS:

1. ALL ROOF DRAINS SHALL BE SIZED IN ACCORDANCE WITH LOCAL CODES AND SHALL CONFORM TO ASME A112.21.2M OR A112.3.1.
2. ALL STORM DRAINAGE PIPING SHALL BE ABS, PVC TYPE DWV OR CAST-IRON WHERE REQUIRED BY CODE.
3. ALL SUSPENDED STORM DRAINAGE PIPE SUPPORT REQUIREMENTS SHALL BE THE SAME AS THE SANITARY AND VENT REQUIREMENTS.
4. ALL HORIZONTAL STORM DRAINAGE PIPE PITCH REQUIREMENTS SHALL BE THE SAME AS THE SANITARY AND VENT REQUIREMENTS.
5. ALL HORIZONTAL STORM DRAINAGE PIPE SHALL BE INSULATED WITH 1" THICK EXTERNAL JACKETED INSULATION AND A MINIMUM INSTALLED R-VALUE OF 3.7 TO PROTECT AGAINST CONDENSATION.
6. CLEANOUTS SHALL BE INSTALLED IN ALL HORIZONTAL DRAINAGE PIPE AND SHALL BE LOCATED NOT MORE THAN 100 FT. APART.
7. CLEANOUTS SHALL BE INSTALLED AT ALL CHANGES OF DIRECTION GREATER THAN 45 DEGREES. WHERE MORE THAN ONE CHANGE OF DIRECTION OCCURS IN A SINGLE PIPE RUN, ONLY ONE (1) CLEANOUT SHALL BE REQUIRED FOR EVERY 40 FEET OF DEVELOPED LENGTH.
8. CLEANOUTS SHALL BE INSTALLED ON PIPES PRIOR TO ANY SLAB PENETRATION.
9. WHERE PIPING IS LOCATED WITHIN WALL CAVITIES, ACCESS TO THE CLEANOUTS SHALL BE PROVIDED.
10. ROOF DRAINS AND OVERFLOW ROOF DRAINS SHALL BE PIPED INDEPENDENTLY. OVERFLOW ROOF DRAINS SHALL NOT BE CONNECTED TO THE PRIMARY ROOF DRAINAGE SYSTEM.
11. MINIMUM PIPING INSULATION THICKNESS HEATING AND HOT-WATER SYSTEMS (STEAM, STEAM CONDENSATE, HOT-WATER HEATING AND DOMESTIC WATER SYSTEMS). PLEASE REFER TO THE LATEST EDITION OF IECC FOR MINIMUM PIPE INSULATION THICKNESS (TABLE C403.12.3)

PIPING	MINIMUM INSULATION THICKNESS (IN INCHES) PER NOMINAL PIPE OR TUBE SIZE				
NOMINAL PIPE SIZE	<1	1 TO 1.5	1.5 TO <4	4 TO <8	≥8
DOMESTIC COLD WATER (40°F TO 60°F)	0.5	0.5	1.0	1.0	1.0
TEMPERATE HOT WATER (105°F TO 140°F)	1.0	1.0	1.5	1.5	1.5
HOT WATER (141°F TO 200°F)	1.5	1.5	2.0	2.0	2.0
STORM DRAIN (HORIZONTAL)	–	–	1.0	1.0	1.0

LEGEND

	COLD WATER PIPING
	TEMPERED WATER PIPING (110°F)
	HOT WATER PIPING (140°F)
	RECIRCULATED HOT WATER PIPING
	OVERHEAD LINES (BY P.C.)
SAN	UNDERGROUND SANITARY PIPING
GW	UNDERGROUND GREASE WASTE PIPING
	VENT PIPING
STS	ABOVE GROUND SECONDARY STORM PIPING
ST	ABOVE GROUND STORM PIPING
ST	UNDERGROUND STORM PIPING
	HOSE BIBB
	CHECK VALVE
	BALL VALVE
	THERMOSTATIC MIXING VALVE
	FLOOR DRAIN
	CLEAN-OUT (FLOOR OR YARD)
	FLOOR SINK
	PRESSURE GUAGE
L	LOW PRESSURE SWITCH
H	HIGH PRESSURE SWITCH
S	SOLENOID VALVE
	THREE-WAY VALVE
	PRESSURE REGULATOR
	DUAL CHECK VALVE OR RPZ
	DUAL CHECK VALVE WITH ATMOSPHERIC VENT
	STRAINER
	RELIEF VENT
	WATER-HAMMER ARRESTER

ABBREVIATIONS

ACM	AREA CONSTRUCTION MANAGER
AVB	ATMOSPHERIC VACUUM BREAKER
BSI	BEVERAGE SYSTEM INSTALLER
CO	CLEAN-OUT
DC	DOWNSPOUT COVER
DFU	DRAINAGE FIXTURE UNIT(S)
EC	ELECTRICAL CONTRACTOR
FAC	FIRE ALARM CONTRACTOR
FCO	FLOOR CLEAN-OUT
FD	FLOOR DRAIN
FPC	FIRE PROTECTION CONTRACTOR
FS	FLOOR SINK
GC	GENERAL CONTRACTOR
GI	GREASE INTERCEPTOR
GPF	GALLONS PER FLUSH
GPM	GALLONS PER MINUTE
GW	GREASE WASTE
HS	HAND SINK
I.P.S.	IRON PIPE SIZE (ALSO NPS)
KEI	KITCHEN EQUIPMENT INSTALLER
KES	KITCHEN EQUIPMENT SUPPLIER
LAV	LAVATORY
MC	MECHANICAL CONTRACTOR
MHT	MALE HOSE THREADS
MS	MOP SINK
NPS	NATIONAL PIPE THREAD STANDARD
NPT	NATIONAL PIPE THREAD TAPERED
O/O	OWNER/OPERATOR
OH	OVERHEAD
P	PUMP
PC	PLUMBING CONTRACTOR
RC	REFRIGERATION CONTRACTOR
RPZ	REDUCED PRESSURE PRINCIPLE BACKFLOW PREVENTER
SS	SANITARY SEWER
ST STS	STORM SEWER (PRIMARY) STORM SEWER (SECONDARY)
SVB	ANTI-SIPHON, SPILL RESISTANT VACUUM BREAKER
TAB	TEST AND BALANACE CONTRACTOR
UG	UNDERGROUND
UR	URINAL
V	VENT
WC	WATER CLOSET
WCO	WALL CLEAN-OUT
WSFU	WATER SUPPLY FIXTURE UNIT(S)
YC	YARD CLEAN-OUT

REV	DATE	DESCRIPTION	BY

Robert D. Anderson ,Inc.
MEP Engineering & Design Consultants
HVAC/Illumination/Plumbing/Power Distribution/Controls

Robert D. Anderson
4403 Zion Rd.
Garland , TX 75043

voice: 972-814-7324
email: robert.d.anderson@sbcglobal.net
contact: Mark Swanson-Project Manager
voice: 817-556-0986
email: mark@mepdesigntx.com

DRAWING IS DIAGRAMMATIC, AND AS SUCH ADJUSTMENTS FOR UNKNOWN FIELD CONDITIONS MAY BE REQUIRED. THIS DRAWING WAS PREPARED FOR SPECIFIC USE ON THE DATE AND SITE INDICATED HEREON. ANY USE OF THIS DRAWING ON ANOTHER PROJECT OR AT A LATER DATE ON THIS PROJECT REQUIRES THE SERVICES OF THE ENGINEER. DRAWINGS ARE SUBJECT TO COPYRIGHT AND MAY NOT BE REPRODUCED, DISTRIBUTED, PUBLISHED OR USED IN ANY WAY WITHOUT THE EXPRESS WRITTEN CONSENT OF ROBERT D. ANDERSON, P.E.

STATE OF TEXAS
ROBERT D. ANDERSON
44987
LICENSED PROFESSIONAL ENGINEER
09/24/24
Firm No. F-5324

@ 2024 McDonald's USA, LLC

PREPARED FOR:
McDonald's USA, LLC

These drawings and specifications are the confidential and proprietary property of McDonald's USA, LLC and shall not be copied or reproduced without written authorization. The contract documents were prepared for use on this specific site in conjunction with the issue date cited for this site. Modification of these documents for use on another site or use of these drawings for reference or example on another project requires the services of properly licensed architects and engineers. Reproduction of the contract documents for reuse on another project is not authorized.

DRAWN BY: MES
STD ISSUE DATE: 2024
REVIEWED BY: JAW
DATE ISSUED: 10/11/2024

TITLE: 2024 STANDARD BUILDING – BB20
4584-WOOD/WOOD

DESCRIPTION:
WOOD BEARING WALLS WITH HARDIE SIDING
WOOD ROOF TRUSS FRAMING
EIFS/BATTEN/METAL/HARDIE SIDING EXTERIOR FINISHES

SITE ID: 042-3591
SITE ADDRESS: NWC OF FM 460 & FM 740, FORNEY TEXAS

JAWA 24-0151

SHEET NO.: P4.0
GENERAL NOTES

COORDINATION SCHEDULE

GENERAL REQUIREMENTS	FURNISH	INSTALL	FINAL CONNECTION	NOTES
MECHANICAL PERMIT	MC			1–3
HOT WORK (WELDING) PERMIT (IF APPLICABLE)	MC			1–3
REFRIGERATION PERMIT (IF APPLICABLE)	KES			1–3
PLUMBING PERMIT	PC			1–3
ELECTRICAL PERMIT	EC			1–3
FIRE SPRINKLER PERMIT (IF APPLICABLE)	FPC			1–3
FIRE ALARM PERMIT (IF APPLICABLE)	FAC			1–3
CONTRACTOR COORDINATION REQUIREMENTS				
HEATING & AIR–CONDITIONING				
ROOFTOP UNITS, INTAKE AND RELIEF	MCD CP	MC		1–5, 17, 22
ROOF CURBS	MCD CP	MC		1–3, 20, 22
GAS PIPING AND GAS PIPE KIT	PC	PC	PC	1–3, 14, 22–23
CONTROLS WIRING	MC	EC	EC	1–3, 19, 22, 24
POWER WIRING	EC	EC	EC	1–3, 19, 22, 24
CONDENSATE TRAP	MC	PC		1–3, 22–23
CONDENSATE PIPING (IF APPLICABLE)	PC	PC		1–3, 22–23
DUCT–MOUNTED SMOKE DETECTOR	MC	MC	EC	1–3, 22, 24
GENERAL EXHAUST SYSTEMS				
EXHAUST FANS	MCD CP	MC		1–3, 17, 22
ROOF CURBS	MCD CP	MC		1–3, 22
CONTROLS (WHERE APPLICABLE)	MC	EC	EC	1–3, 22, 24
POWER WIRING	EC	EC	EC	1–3, 22, 24
TEMPERATURE CONTROLS				
BUILDING AUTOMATION SYSTEM	MCD CP	MC	EC	1–3, 22, 24
REMOTE SENSORS (RH AND/OR TEMPERATURE)	MC	MC	EC	1–3, 22, 24
CONTROLS WIRING (WHERE APPLICABLE)	MC	EC	EC	1–3, 22, 24
POWER WIRING	EC	EC	EC	1–3, 22, 24
DUCTWORK AND ACCESSORIES				
GALVANIZED SHEET METAL DUCTWORK	MC	MC		1–3, 22
EXTERNAL INSULATION	MC	MC		1–3, 22
INTERNAL INSULATION (IF APPLICABLE)	MC	MC		1–3, 22
WEATHERPROOFING (IF APPLICABLE)	MC	MC		1–3, 22
SPIN–IN COLLARS	MC	MC		1–3, 22
FLEXIBLE DUCTWORK	MC	MC		1–3, 22
VOLUME/BALANCING DAMPERS	MC	MC		1–3, 22
FIRE DAMPERS (IF APPLICABLE)	MC	MC		1–3, 22
FIRESTOPPING (IF APPLICABLE)	MC	MC		1–3, 22
AIR DEVICES AND ACCESSORIES	MC	MC	MC	1–3, 7, 22, 28
PLUMBING SYSTEMS				
WATER HEATERS	MCD CP	PC	PC	1–3, 11–12, 23
HOT AND COLD WATER PIPE	PC	PC	PC	1–3, 23
VENTS AND INTAKES	PC	PC	PC	1–3, 23
THERMOSTATIC MIXING VALVE	PC	PC	PC	1–3, 23
POWER AND CONTROL WIRING	EC	EC	EC	1–3, 23–24
KITCHEN EXHAUST SYSTEMS				
McDONALD'S BACKSHELF EXHAUST HOODS	KES	KEI		1–3, 6, 22, 27
CANOPY EXHAUST HOODS (IF APPLICABLE)	KES	KEI		1–3, 6, 22, 27
BLACK IRON DUCTWORK	KES	KEI		1–3, 6, 22
STAINLESS STEEL DUCTWORK (IF APPLICABLE)	KES	KEI		1–3, 6, 22
ALUMINUM DUCTWORK (IF APPLICABLE)	KES	KEI		1–3, 6, 22
UL LISTED DUCT WRAP	MC	MC		1–3, 6, 22
FIRE–RATED DUCT ENCLOSURE (IF APPLICABLE)	GC	GC		1–3, 6, 20, 22
EXHAUST FANS	MCD CP	MC		1–3, 6, 17, 22
ROOF CURBS	MCD CP	MC		1–3, 6, 20, 22
CURB EXTENSIONS	MC	MC		1–3, 6, 22
CONTROLS (WHERE APPLICABLE)	EC	EC	EC	1–3, 6, 22, 24
POWER WIRING	EC	EC	EC	1–3, 6, 22, 24
FIRE SUPPRESSION SYSTEM	KES	KES	KES	1–3, 16, 22, 27
KITCHEN EQUIPMENT				
COOLER/FREEZER	KES	GC		1–3, 27
EVAPORATOR COILS	KES	MC		1–3, 27
CONDENSATE PIPING	PC	PC	PC	1–3, 23, 27
REMOTE CONDENSING UNIT (MAC)	KES	MC		1–3, 22, 27
ROOF CURBS	MC	MC		1–3, 22
REFRIGERANT PIPING	KES	MC	MC	1–3, 22, 27
POWER WIRING	EC	EC	EC	1–3, 22, 24, 27
CONTROL WIRING	EC	EC	EC	1–3, 24, 27
PIPE PORTALS	MC	MC		1–3, 22
ICE MACHINES	KES	KEI		1–3, 27
WATER SUPPLY PIPING	KES	KEI	BSI	1–3, 27
REMOTE CONDENSING UNITS	KES	MC		1–3, 22, 27
ROOF CURBS	MC	MC		1–3, 22, 27
REFRIGERANT PIPING	KES	MC	MC	1–3, 22, 27
POWER WIRING	EC	EC	EC	1–3, 22, 24, 27
CONTROL WIRING	KES	EC	EC	1–3, 24, 27
PIPE PORTALS	MC	MC		1–3, 22
GRILLS	KES	KES		1–3, 27
GAS PIPING (IF APPLICABLE)	PC	PC	PC	1–3, 23, 27
POWER WIRING	EC	EC	EC	1–3, 24, 27
CONTROL CABLE (6' CLAMSHELL ONLY)	MC	EC	EC	1–3, 23, 24, 27
FRYERS	KES	KES		1–3, 27
GAS PIPING (IF APPLICABLE)	PC	PC	PC	1–3, 23, 27
POWER WIRING	EC	EC	EC	1–3, 24, 27
3–COMPARTMENT SINK	KES	KES		1–3, 12, 27
FAUCETS AND PRE–RINSE SPRAYER	KES	KES		1–3, 27
WATER SUPPLY PIPING	PC	PC	PC	1–3, 23, 27
SANITARY DRAIN PIPING	PC	PC	PC	1–3, 23, 27
HAND SINKS	MCD CP	PC		1–3, 23, 27
FAUCET	MCD CP	PC		1–3, 23, 27
WATER SUPPLY PIPING	PC	PC	PC	1–3, 23, 27
SANITARY DRAIN PIPING	PC	PC	PC	1–3, 23, 27
VEGETABLE SINK	KES	KES		1–3, 23, 27
FAUCET	KES	KES		1–3, 23, 27
WATER SUPPLY PIPING	PC	PC	PC	1–3, 23, 27
SANITARY DRAIN PIPING	PC	PC	PC	1–3, 23, 27
WASHING MACHINE	KES	KES		1–3, 23, 27
WATER SUPPLY PIPING	PC	PC	PC	1–3, 23, 27
SANITARY DRAIN PIPING	PC	PC	PC	1–3, 23, 27
WARE WASHER	KES	KES		1–3, 23, 27
WATER SUPPLY PIPING	PC	PC	PC	1–3, 23, 27
SANITARY DRAIN PIPING	PC	PC	PC	1–3, 23, 27
MISCELLANEOUS ITEMS				
FIRE SPINKLER SYSTEMS	FPC	FPC	FPC	1–3, 15, 25
HVAC EQUIPMENT START–UP	MC			1–3, 22
TEST, ADJUST AND BALANCE HVAC SYSTEMS	TAB			1–3, 22
DOOR GRILLES (IF APPLICABLE)	MC	GC		1–3, 20, 22
ROOF/WALL OPENINGS	GC			1–3, 20–24
APPLIANCE BACKFLOW PREVENTION	KES/BSI	PC	PC	1–3, 23, 27
CO2 DETECTION SYSTEM	KES/BSI	EC/BSI	EC/BSI	1–3, 22, 27

NOTES:

1. THIS SCHEDULE IS INTENDED AS A GUIDE FOR THE WORK TO BE PERFORMED. ALL WORK SHALL BE COORDINATED BETWEEN THE McDONALD'S AREA CONSTRUCTION MANAGER AND ALL GC AND O/O SUBCONTRACTORS.
2. ONE (1) COPY OF THE DECOR PACKAGE DRAWINGS SHALL BE SUPPLIED TO THE GENERAL CONTRACTOR AND EACH OF THE SUBCONTRACTORS. IT SHALL BE THE RESPONSIBILITY OF THE GENERAL CONTRACTOR AND THE SUBCONTRACTORS TO INSURE THAT THEY HAVE RECEIVED THE DECOR PACKAGE DRAWINGS.
3. FOR ANY WORK NOT CLARIFIED IN THIS SCHEDULE OR IN THE NOTES AND SPECIFICATIONS, PLEASE CONSULT THE McDONALD'S CONSTRUCTION MANAGER FOR SCOPE OF WORK.
4. ALL ROOFTOP UNIT EQUIPMENT SUPPLIED BY THE MECHANICAL CONTRACTOR AND THE KITCHEN EQUIPMENT SUPPLIER SHALL BE ON SITE AT THE SAME TIME FOR A SINGLE CRANE LIFT. EQUIPMENT SITE ARRIVAL DATE SHALL BE COORDINATED BETWEEN THE CONSTRUCTION MANAGER, MECHANICAL CONTRACTOR AND KITCHEN EQUIPMENT SUPPLIER.
5. ALL ROOFTOP UNITS INSTALLED IN McDONALD'S RESTAURANTS SHALL BE HIGH EFFICIENCY EQUIPMENT. THE INSTALLATION OF STANDARD EFFICIENCY ROOFTOP UNITS IS PROHIBITED. PLEASE REFER TO THE LATEST EDITION OF IECC FOR HVAC EQUIPMENT PERFORMANCE REQUIREMENTS.
6. ALL KITCHEN EQUIPMENT REQUIRING EXHAUST SHALL BE INSTALLED IN ACCORDANCE WITH THESE PLANS. ANY VARIATION FROM THESE PLANS SHALL BE REPORTED TO THE CONSTRUCTION MANAGER AND THE ENGINEER–OF–RECORD.
7. WHERE GYPSUM BOARD CEILINGS ARE INSTALLED, THE MECHANICAL CONTRACTOR SHALL SUPPLY DRYWALL MOUNTING FRAMES FOR LAY–IN TYPE DIFFUSERS.
8. ALL WORK SHOWN ON P1.6 DRAWING(S) SHALL BE COMPLETED BY THE BEVERAGE SYSTEM INSTALLER (OR K.E.S.) UNLESS OTHERWISE NOTED IN THE PLUMBING DRAWINGS.
9. ALL WORK ON P1.0 & P1.2 DRAWING(S) SHALL BE BY THE PLUMBING CONTRACTOR.
10. THE BEVERAGE SYSTEM INSTALLER FURNISHES, RUNS AND CONNECTS ALL FLEXIBLE WATER AND SYRUP LINES FOR ALL AFFECTED EQUIPMENT INCLUDING THE FOLLOWING:
    A. HOT CHOCOLATE
    B. COFFEE BREWER
    C. ICE MACHINE
    D. O.J.
    E. SODA TOWERS
11. NOT USED.
12. THE CONSTRUCTION MANAGER, PLUMBING CONTRACTOR AND KITCHEN EQUIPMENT SUPPLIER SHALL COORDINATE WHICH SOILED DISHWASHER (3–COMPARTMENT SINK) IS BEING INSTALLED IN THE RESTAURANT.
13. NOT USED.
14. NOT USED.
15. ALL FIRE PROTECTION DRAWINGS CONTAINED WITHIN THIS SET ARE STRICTLY FOR REFERENCE ONLY. FIRE SPRINKLER DRAWINGS SHALL BE DESIGNED AND PERMITTED BY A FIRE PROTECTION CONTRACTOR.
16. ALL R–102 WET CHEMICAL FIRE SUPPRESSION SYSTEMS FOR TYPE I HOODS SHALL BE DESIGNED AND INSTALLED BY A LOCAL ANSUL AGENT. THE USE OF DRY CHEMICAL SYSTEMS IS PROHIBITED. THE LOCAL ANSUL AGENT CONTRACT IS HANDLED THROUGH THE KITCHEN EQUIPMENT SUPPLIER.
17. ALL ROOFTOP UNITS AND EXHAUST FANS ARE SUPPLIED WITH A FACTORY–INSTALLED DISCONNECT SWITCH.
18. ELECTRICAL CONTRACTOR SHALL PROVIDE DISCONNECT SWITCHES FOR REMOTE CONDENSING UNITS.
19. ALL ELECTRICAL CONDUITS FOR ROOFTOP EQUIPMENT SHALL BE BROUGHT UP THROUGH THE BASE OF THE UNIT TO MINIMIZE ROOF PENETRATIONS. WHERE THIS IS NOT POSSIBLE, THE ELECTRICAL CONTRACTOR SHALL PROVIDE THE NECESSARY PIPE PORTALS ON ROOF.
20. WALK–IN COOLER AND WALK–IN FREEZER REFRIGERATION SYSTEMS SHALL MEET THE PERFORMANCE REQUIREMENTS OUTLINED IN THE LATEST EDITION OF IECC. MINIMUM ANNUAL WALK–IN ENERGY FACTOR (AWEF) PROVIDED BY EQUIPMENT MANUFACTURER IS DETERMINED IN ACCORDANCE WITH AHRI 1250.
21. SEE ARCHITECTURAL DRAWINGS FOR ADDITIONAL INFORMATION.
22. SEE STRUCTURAL DRAWINGS FOR ADDITIONAL INFORMATION.
23. SEE MECHANICAL DRAWINGS FOR ADDITIONAL INFORMATION.
24. SEE PLUMBING DRAWINGS FOR ADDITIONAL INFORMATION.
25. SEE ELECTRICAL DRAWINGS FOR ADDITIONAL INFORMATION.
26. SEE FIRE PROTECTION DRAWINGS FOR ADDITIONAL INFORMATION.
27. SEE FIRE ALARM DRAWINGS FOR ADDITIONAL INFORMATION.
28. SEE KITCHEN DRAWINGS FOR ADDITIONAL INFORMATION.
29. SEE DECOR DRAWINGS FOR ADDITIONAL INFORMATION.

EXPANSION TANK SCHEDULE

TAG	MANUFACTURER	MODEL	TOTAL VOL.	CONNECTION	ACCESSORIES
ET–1	AMTROL	ST–12	4.4 GAL.	¾"	–

NOTES:
1. SEE DETAIL 6 ON DRAWING P3.0

PUMP SCHEDULE

TAG	MANUFACTURER	MODEL	HP	V	Ø	Hz	ACCESSORIES
P–1	GRUNDFOS	UP 15–18 B7	1/25	120	1	60	1–3

ACCESSORIES:
1. TIMECLOCK
2. AQUASTAT
3. CHECK VALVE

NOTES:
1. SEE ELECTRICAL DRAWINGS FOR TIMECLOCK WIRING
2. DESIGN: 2 GPM, 7 FT. HEAD
3. SEE DETAIL 6 ON DRAWING P3.0

BACKFLOW PREVENTER SCHEDULE

TYPE	MFR.	MODEL	ASSE LISTING	SERVES	LOCATION
AG	FURN. WITH CHEM. SYS.		1055B	CHEMICAL SYSTEM	DIN. RM.–MOP SINK
AG	FURN. WITH CHEM. SYS.		1055B	CHEMICAL SYSTEM	KITCHEN–MOP SINK
AVB	FURN. WITH CHEM. SYS.		1001	CHEMICAL SYSTEM	SUPP. RM.–3–COMP
AVB	FURN. WITH FAUCET		–	MOP SINK FAUCET	SEE DRAWINGS
VB	FURN. WITH HB		1011	WALL HYDRANT	SEE DRAWINGS
DCV	FURN. WITH HB		1052	YARD HYDRANT	TRASH CORRAL
DCV	FURN. WITH HB		1052	ROOF HYDRANT	ROOF
RPZ	WATTS	375XL–AG	1022	SODA TOWERS AND SPEC. COFFEE	
RPZ	WILKINS	375XL–SXL–AG	1022	INCOMING WATER	SUPPORT ROOM
RPZ	WILKINS	375XL–AG	1022	FILTRATION SYSTEM	SUPPORT ROOM

WATER HEATER SCHEDULE

TAG	MANUFACTURER	MODEL	SIZE GAL.	HEATING TYPE	HEATING KW	RECOV. 100°F ΔT GPH	ELECTRICAL VOLTS	ELECTRICAL Ø	ELECTRICAL Hz	ELECTRICAL F.L.A.
WH–1	RHEEM–RUDD	ES120–54–G	120	ELEC	54	221	208	3	60	150
	BRADFORD WHITE	CEHD120(A)54–3*CF	120							

ACCESSORIES:
1. INSTALLATION KIT

VALVE SCHEDULE

MANUFACTURER	MODEL	TEMP. SETTING	LISTING	SERVES
WATTS	LFMMV	110°F	ASSE 1017,1069,1070	CHEMICAL SYSTEM MIXING
WATTS	LFMMV	104°F	ASSE 1017,1069,1070	LAVS & HAND SINKS MIXING
ZURN	ZW3870XLT	104°F		
WATTS	LFUSG–B	110°F	ASSE 1016, 1070	VEGETABLE PREP. SINK MIXING
B & G	CB–1/2	–	–	RECIRC. SYSTEM BALANCING VALVE
NIBCO	585–70–HC	–	–	CHEMICAL SYSTEM SHUT–OFF
NIBCO	S–FP–600A–LF	–	–	RESTROOM SHUT–OFF
NIBCO	S–FP–600A–LF	–	–	COMBI OVEN WATER SHUT OFF
WATTS	LFFBV–PEX	–	–	COMBI OVEN RO WATER SHUT OFF

INTERCEPTOR SCHEDULE

TAG	DESCRIPTION	MANUFACTURER	MODEL	ACCESSORIES	NOTES
GI–1	EXTERIOR GREASE INTERCEPTOR	SCHIER PRODUCTS	GB–500	4" INLET, 4" OUTLET	1–3

NOTES:
1. SEE GREASE INTERCEPTOR NOTES AND ACCESSORIES ON DRAWING P4.0
2. GREASE INTERCEPTOR IS SIZED FOR CITY SEWER APPLICATIONS ONLY. DO NOT USE FOR SEPTIC FIELDS.
3. FOR SCHIER HYDROMECHANICAL GREASE INTERCEPTOR ORDERING, CONTACT: LEE FLASHER, HUGHES SUPPLY, DIRECT LINE: (407) 509–7626, OR E–MAIL: MCDCOORD@HAJOCA.COM

PLUMBING FIXTURE SCHEDULE

TAG	DESCRIPTION	MANUFACTURER	MODEL	WATER USE	ACCESSORIES/COMMENTS	
F–1	FAUCET FOR LAV–1	SLOAN ZURN	SF–2150 ZG6950XL–F–10S	0.5 GPM (0.08 GAL/10 SEC CYCLE)	FAUCET OPERATION: SENSOR	
F–2	FAUCET FOR MS–1	ZURN	Z843M4		FAUCET OPERATION: MANUAL SEE DETAIL 2 ON DRAWING P3.0	5' VINYL HOSE WALL HOOK
FCO	6x6 FLOOR CLEAN OUT	ZURN JAY R. SMITH	Z1400–SZ 4040		SEE DRAWINGS FOR PIPE SIZES SEE NOTE 8	
FD–1	6x6 FLOOR DRAIN WITH FUNNEL	ZURN JAY R. SMITH	Z415–SZ1 3510–F25		PIPE SIZE: 3" STRAINER SIZE: 6" NICKEL BRONZE	FUNNEL: ZURN Z329 SEE NOTE 8
FD–2	6x6 FLOOR DRAIN	ZURN JAY R. SMITH	Z415–SZ1 2005		PIPE SIZE: 3" STRAINER SIZE: 6" NICKEL BRONZE	FUNNEL: NONE SEE NOTE 8
FD–3	6x6 FLOOR DRAIN WITH FUNNEL	ZURN JAY R. SMITH	Z415–SZ1 3510–F25		PIPE SIZE: 4" STRAINER SIZE: 6" NICKEL BRONZE	FUNNEL: ZURN Z329 SEE NOTE 8
FD–4	6x6 FLOOR DRAIN	ZURN JAY R. SMITH	Z415–SZ1 2005		PIPE SIZE: 4" STRAINER SIZE: 6" NICKEL BRONZE	FUNNEL: NONE SEE NOTE 8
FS–1	12x12 FLOOR SINK WITH HALF–GRATE	ZURN JAY R. SMITH	ZN1901 3435		PIPE SIZE: 3" DOME STRAINER: ALUMINUM	GRATE: HALF – NICKEL–BRONZE SEE NOTE 8
FS–2	8x8 FLOOR SINK WITH HALF–GRATE	ZURN JAY R. SMITH	ZN1910 3415		PIPE SIZE: 3" DOME STRAINER: ALUMINUM	GRATE: HALF – NICKEL–BRONZE SEE NOTE 8
FS–3	8x8 FLOOR SINK	ZURN JAY R. SMITH	ZN1910 3415		PIPE SIZE: 3" DOME STRAINER: ALUMINUM	GRATE: FULL – NICKEL–BRONZE SEE NOTE 8
HB–1	WALL HYDRANT	WOODFORD ZURN JAY R. SMITH	B65 Z1320–EZ 5519		WALL CLAMP: ADJUSTABLE VERIFY WALL THICKNESS	SEE NOTE 3
HB–2	YARD HYDRANT	WOODFORD	S4H		SEE NOTES 4 & 9	
HB–3	ROOF HYDRANT	WOODFORD	RHY2–MS		(NO DRAIN REQUIRED)	
HS–1	STAINLESS STEEL HAND SINK	ADVANCE TABCO	7–PS–61		FAUCET: INCLUDED WITH SINK	SEE NOTES 6 & 10
HS–2	STAINLESS STEEL HAND SINK – ADA	ADVANCE TABCO	7–PS–26		FAUCET: INCLUDED WITH SINK	SEE NOTES 6 & 10
LAV–1	LAVATORY	KOHLER SLOAN	K–2882–0 SS3021		FAUCET: F–1 TRUEBRO LAVGUARD2 MODEL #102–E–Z CORIAN COUNTER BY G.C.	SEE NOTE 10 SEE DETAIL 3 ON P3.0 SEE NOTE 11
MS–1	MOP SINK	FIELD FABRICATED ADVANCE TABCO	RECESSED – FLOOR (24x24x12) 9–OP–24FM–SS		FAUCET: F–2 INCLUDES HOSE, HOSE BRACKET AND TWO (2) 24"Wx36"H WALL GUARDS SEE DETAIL 2 ON P3.0	
TD–1	TRENCH DRAIN	ZURN	Z886–DGC		CLASS A STAINLESS STEEL MESH SCREEN GRATE. NO–HUB BOTTOM OUTLET. BOTTOM DOME STRAINER. CLOSED END CAP	
UR–1	ADA WALL–HUNG URINAL	SLOAN ZURN –	SU–1009 ZK5755.380.00 –	0.125 GPF	FLUSH VALVE: SLOAN SOLIS 8186 ZURN ZTR6203–ULF–LL ¾" I.P.S., 1" TOP SPUD	FLUSH VALVE OPERATION: SENSOR SEE NOTE 2
WB–1	WALL BOX FOR WASHING MACHINE	SIOUX CHIEF	696–2313		HAMMER ARRESTERS INCLUDED WITH BOX MOUNTING HEIGHT: 12" A.F.F.	SEE NOTE 7
WB–2	WALL BOX FOR WAREWASHER	SIOUX CHIEF	687–3PV		MOUNTING HEIGHT: 12" A.F.F.	SEE NOTE 7
WC–1	WATER CLOSET	SLOAN ZURN –	ST–2009 ZK5655.381.00.03.00 –	1.28 GPF	FLUSH VALVE: SLOAN SOLIS 8111 ZURN ZTR6200EV–LL 1" I.P.S., 1½" TOP SPUD	FLUSH VALVE OPERATION: SENSOR SEAT: BEMIS MODEL 2155CT
WC–2	ADA WATER CLOSET	SLOAN ZURN –	ST–2029 ADA ZK5655.4MC.00.03.00 –	1.28 GPF	FLUSH VALVE: SLOAN SOLIS 8111 ZURN ZTR6200EV–CC–LL 1" I.P.S., 1½" TOP SPUD	FLUSH VALVE OPERATION: SENSOR SEAT: BEMIS MODEL 2155CT
–	SOILED DISHTABLE (3–COMPARTMENT SINK)	–	–		ITEM: 151.46	SEE NOTE 7
–	VEGETABLE PREPARATION SINK	–	–		ITEM: 134.02	SEE NOTE 7
–	WAREWASHER	HOBART	AM16SVLT WITH DRAIN WATER ENERGY RECOVERY		ITEM: 152.05 WALL BOX: WB–2	SEE NOTE 7
–	WASHING MACHINE	–	–		ITEM: 223.07 WALL BOX: WB–1	SEE NOTE 7
WHA	WATER–HAMMER ARRESTER	SIOUX CHIEF	SERIES 650		–	SEE SHEET P1.2
WCO	WALL CLEANOUT	ZURN JAY R. SMITH	Z1446 9776T		SEE DRAWINGS FOR PIPE SIZES	INCLUDE VANDAL–PROOF SCREWS IN PUBLIC AREAS
	ROOF DRAINS AND ACCESSORIES					
DC–1	OVERFLOW DOWNSPOUT COVER	ZURN JAY R. SMITH	Z199–SS 1770–BS		SEE DRAWINGS FOR PIPE SIZES BIRD SCREEN	SEE NOTE 8
RD–1 THRU RD–4	COMBINATION MAIN ROOF AND OVERFLOW DRAIN	ZURN	Z165		SEE DRAWINGS FOR PIPE SIZES ROOF OPENING: 30"x14"	SEE NOTE 8

NOTES:
1. SEE McDONALD'S PROJECT MANUAL FOR ADDITIONAL MANUFACTURERS
2. PLUMBING CONTRACTOR SHALL COORDINATE WITH G.C. TO PROVIDE BLOCKING FOR PROPER URINAL SUPPORT
3. PLUMBING CONTRACTOR SHALL COORDINATE WITH G.C. TO PROVIDE INTERIOR BLOCKING ON W/W BUILDING FOR WALL CLAMP
4. YARD HYDRANT IS FOR TRASH CORRAL – SEE SITE PLAN FOR LOCATION
5. PLUMBING CONTRACTOR SHALL ROUTE ⅛" DRAIN PIPE FROM HOSE BIBB TO NEAREST FLOOR DRAIN OR FLOOR SINK
6. PLUMBING CONTRACTOR SHALL COORDINATE WITH G.C. TO PROVIDE BLOCKING FOR PROPER SINK SUPPORT
7. SEE KITCHEN DRAWINGS FOR ADDITIONAL INFORMATION – PLUMBING CONTRACTOR SHALL COORDINATE INSTALLATION WITH K.E.S.
8. PLUMBING CONTRACTOR SHALL SPECIFY CONNECTION MATERIAL/TYPE WHEN ORDERING
9. PLUMBING CONTRACTOR SHALL SPECIFY BURY DEPTH WHEN ORDERING
10. PLUMBING CONTRACTOR SHALL PROVIDE GRID DRAIN, P–TRAP AND VALVE STOPS FOR ALL SINKS & LAVS
11. FOR ALTERNATIVE LAVATORY OPTIONS, SUCH AS MOLDED SINKS OR DECK MOUNTED HAND DRYER, PLEASE CONTACT USRD OR HUGHES DIRECTLY.

TO ORDER PLUMBING FIXTURES, CONTACT HUGHES SUPPLY:
E–MAIL:
MCDCOORD@HUGHESSUPPLY.COM
OR MCDCOORD@HAJOCA.COM

REV	DATE	DESCRIPTION	BY
1	04/08/2025	COUNTY COMMENTS, McD QC COMMENTS, & UTILITY COORDINATION	

Robert D. Anderson ,Inc.
MEP Engineering & Design Consultants
10136"Illuminator"Plano/Frisco Distribution/Controls
Robert D. Anderson
4403 Zion Rd.
Garland ,TX 75043
voice: 972-814-7324
email: robert.d.anderson@sbcglobal.net
contact: Mark Swanson-Project Manager
voice: 817-556-0986
email: mark@mepdesigntx.com

DRAWING IS DIAGRAMMATIC AND AS SUCH ADJUSTMENTS FOR UNKNOWN FIELD CONDITIONS MAY BE REQUIRED. THIS DRAWING WAS PREPARED FOR SPECIFIC USE ON THE DATE AND SITE INDICATED HEREON. ANY REUSE OF THIS DRAWING FOR OTHER PURPOSES OR ON OTHER PROJECT REQUIRES THE SERVICES OF THE ENGINEER. DRAWINGS ARE SUBJECT TO COPYRIGHT AND MAY NOT BE REPRODUCED, DISTRIBUTED, PUBLISHED OR USED IN ANY WAY WITHOUT THE EXPRESS WRITTEN CONSENT OF ROBERT D. ANDERSON, P.E.

ROBERT D. ANDERSON 44987 LICENSED PROFESSIONAL ENGINEER 04/04/25
Firm No. F-5324

@ 2024 McDonald's USA, LLC

PREPARED FOR: McDonald's USA, LLC

These drawings and specifications are the confidential and proprietary property of McDonald's USA, LLC and shall not be copied or reproduced without written authorization. The contract documents were prepared for use on the specific site described herein. Reuse of these documents on another site without its express written consent and adaptation to the site conditions and requirements of the governing authorities, is not authorized.

DRAWN BY: MES
STD ISSUE DATE: 2024
REVIEWED BY: JAW
DATE ISSUED: 10/11/2024

TITLE: 2024 STANDARD BUILDING – BB20
4584–WOOD/WOOD

DESCRIPTION: WOOD BEARING WALLS WITH HARDIE SIDING
WOOD ROOF TRUSS FRAMING
EIFS/BATTEN/METAL/HARDIE SIDING EXTERIOR FINISHES

SITE ID: 042–3591
SITE ADDRESS: NWC OF FM 460 & FM 740, FORNEY TEXAS

JAWA 24–0151

SHEET NO. P4.1

SCHEDULES

THE PURPOSE OF THIS SHEET IS TO PROVIDE A CHECKLIST AND VISUAL GUIDE SO THE INSTALLING EC CAN VERIFY THE WORK IS IN COMPLIANCE WITH MCDONALD'S SPECIFICATIONS THAT ARE CRITICAL TO THE PROPER FUNCTIONING OF OUR POINT OF SALE (POS) COMPUTER SYSTEMS.

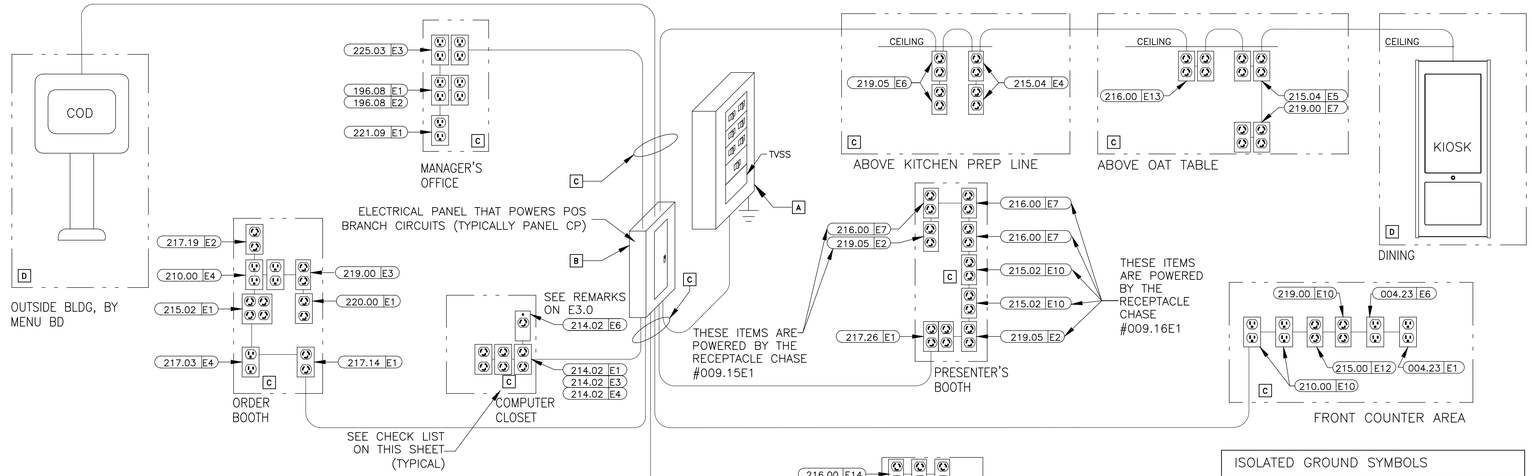

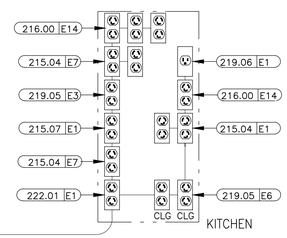

POS ELECTRICAL RISER DIAGRAM

THIS RISER DIAGRAM SHOWS THE ELECTRICAL ROUGH-INS REQUIRED FOR A TYPICAL POINT OF SALE (POS) SYSTEM IN A FREE STANDING FAST FORWARD RESTAURANT. VERIFY ALL POS ROUGH-INS AND MOUNTING HEIGHTS WITH THE ELECTRICAL ROUGH-IN PLAN, NOTES AND INFORMATION DRAWINGS.

ISOLATED GROUND SYMBOLS

SYMBOL	DESCRIPTION
	IG4710
	IG4700A
	IG5261
	IG5262
	IG2610

LOW VOLTAGE CABLE MANAGEMENT SPECIFICATION

GENERAL/MATERIALS

1. THE GC OR EC SHALL FURNISH AND INSTALL A COMPLETE LOW VOLTAGE CABLE MANAGEMENT SYSTEM UTILIZING CADDY-ERICO TYPE CAT-32 J-HOOK SUPPORTS (2-INCH DIAMETER LOOP MINIMUM). ALL J-HOOKS SHALL;
   - HAVE A MINIMUM BEARING SURFACE OF 1⅜",
   - HAVE FLARED EDGES TO PREVENT DAMAGE TO HIGH PERFORMANCE CABLES,
   - HAVE AN ELECTRO-GALVANIZED FINISH,
   - HAVE 3/8" WIDE CABLE RETAINING STRAPS,
   - BE UL LISTED AND LABELED,
   - BEAR THE UL SYMBOL MARKING ON THE PART FOR IDENTIFICATION
   - BE INSTALLED PER THE MANUFACTURERS INSTALLATION INSTRUCTIONS.
2. THE ENTIRE INSTALLATION SHALL BE IN COMPLIANCE WITH THE NATIONAL ELECTRICAL CODE (NEC), NEC SECTION 800, BICSI STANDARDS 568 & 569, ALL APPLICABLE NATIONAL, STATE, LOCAL, AND SAFETY CODES, AND McDONALD'S SPECIFICATIONS.

INSTALLATION

1. LOW VOLTAGE J-HOOK CABLE PATHWAY (FOR POS CABLING SYSTEM) SHALL BE PROVIDED FROM THE MANAGERS OFFICE (OR COMPUTER CLOSET) DATA CONDUIT STUB-UP LOCATION TO THE FOLLOWING DATA CONDUIT STUB-UP LOCATIONS (AS APPLICABLE):
   - FRONT COUNTER.
   - PRESENTERS BOOTH.
   - CASHIERS BOOTH.
   - THIRD DRIVE-THRU WINDOW(IF PRESENT).
   - CREW ROOM.
   - VALENCE WALL.
   - REMOTE ORDERING STATIONS.
   - NETPOP TELEPHONE PANEL LOCATION.
   - KIOSK
   - DIGITAL MERCHANDISER

   CABLE SUPPORTS SHALL BE PROVIDED WITHIN 24 INCHES OF THESE STUB-UP LOCATIONS. ALL STUB-UP CONDUITS SHALL BE PROVIDED WITH AN INSULATED BUSHING TO PROTECT CABLES DURING INSTALLATION.
2. THE LOCATION AND ROUTING OF THE LOW VOLTAGE CABLE MANAGEMENT SYSTEM SHALL BE COORDINATED WITH ALL OTHER CONSTRUCTION TRADES PRIOR TO INSTALLATION TO AVOID CONFLICTS WITH THE OTHER TRADES FINAL INSTALLATIONS, BOTH BEFORE AND AFTER THE CABLE MANAGEMENT SYSTEM AND THE POS CABLING ARE INSTALLED. FINAL INSTALLATION LOCATION SHALL BE READILY ACCESSIBLE TO ALLOW FOR EASE IN INSTALLATION OF THE POS CABLING BY THE POS VENDOR'S INSTALLER.
3. LOW VOLTAGE J-HOOK CABLE SUPPORTS AND APPURTENANCES SHALL BE FASTENED TO THE BUILDING STRUCTURAL AND/OR FRAMING MEMBERS. LOW VOLTAGE J-HOOK CABLE SUPPORTS SHALL NOT BE FASTENED OR UTILIZE THE CEILING GRID SUSPENSION WIRES OR T-BAR GRID FOR INSTALLATION. CONTRACTOR SHALL PROVIDE ALL NECESSARY BRACKETS, HANGERS, RODS, CLAMPS, FLANGES, SUPPORTS, ETC. FOR A COMPLETE AND FULLY FUNCTIONAL SYSTEM. THE INSTALLATION OF THE LOW-VOLTAGE CABLE MANAGEMENT SYSTEM SHALL BE DONE SO THAT THE ROUTING OF THE CABLES IS PARALLEL TO AND/OR PERPENDICULAR TO FRAMING AND STRUCTURAL BUILDING MEMBERS.
4. LOW VOLTAGE J-HOOK CABLE SUPPORTS SHALL BE INSTALLED A MAXIMUM OF 36 INCHES APART. AT TRANSITION LOCATIONS, THE CONTRACTOR SHALL PROVIDE ADDITIONAL J-HOOKS TO ALLOW FOR A MINIMUM ONE-FOOT RADIUS BEND AND FOR ADDITIONAL CABLE SUPPORT AT THESE TRANSITION POINTS.
5. TO AVOID ELECTROMAGNETIC INTERFERENCE (EMI), ALL PATHWAYS SHALL PROVIDE A MINIMUM CLEARANCE OF 4 FEET (1.2 METERS) FROM MOTORS AND TRANSFORMERS AND A MINIMUM CLEARANCE OF 1 FOOT (0.3 METERS) FROM CONDUIT AND CABLES UTILIZED FOR ELECTRICAL POWER DISTRIBUTION, AND OTHER NON-POS LOW VOLTAGE CONDUCTORS.
6. ANY CEILING TILES IN THE AREA WHERE THE LOW-VOLTAGE CABLE MANAGEMENT SYSTEM IS LOCATED SHALL NOT BE INSTALLED UNTIL THE POS VENDOR'S CONTRACTOR COMPLETES THE INSTALLATION OF ALL POS CABLING.
7. ALL NON-POS LOW VOLTAGE CABLING SHALL BE INSTALLED IN A SEPARATE CABLE MANAGEMENT SYSTEM INDEPENDENT OF THE LOW-VOLTAGE CABLE MANAGEMENT SYSTEM UTILIZED FOR THE POS CABLING.
8. THE POS INSTALLER SHALL BE RESPONSIBLE TO FURNISH AND INSTALL ALL LOW VOLTAGE CABLING REQUIRED FOR THE COMPLETE AND FULLY FUNCTIONAL OPERATION OF THE POS SYSTEM. ALL POS CABLING SHALL BE INSTALLED WITHIN THE LOW-VOLTAGE CABLE MANAGEMENT SYSTEM.
9. GENERAL CONTRACTOR TO COORDINATE WITH POS INSTALLER. POS INSTALLER TO PERFORM POS CABLE INSTALLATION PRIOR TO CLOSING OF WALLS AND CEILING.

ELECTRICAL POS CERTIFICATION

AS OF THE DATE BELOW, I HEREBY CERTIFY THAT ALL ELECTRICAL WORK, ELECTRICAL SERVICE AND ELECTRICAL SYSTEMS, MATERIALS AND LABOR RELATED TO THE POS ELECTRICAL INSTALLATION IN WHICH THE UNDERSIGNED ARE DIRECTLY OR INDIRECTLY RESPONSIBLE HAVE BEEN PROPERLY INSTALLED IN FULL COMPLIANCE WITH ALL CONSTRUCTION DOCUMENTS AND ALL NFPA, BUILDING, ELECTRICAL AND OTHER APPLICABLE CODES, ALONG WITH ALL OF THE REQUIREMENTS OUTLINED ON THIS DRAWING. I FURTHER CERTIFY THAT THE ELECTRIC SERVICE POWERING THE POS SYSTEM HAS BEEN PROPERLY INSTALLED BY A QUALIFIED ELECTRICIAN. SKILLED, KNOWLEDGEABLE AND TRAINED TO INSTALL ALL THE REQUIRED ELECTRICAL DISTRIBUTION COMPONENTS NECESSARY TO POWER THE POINT OF SALE (POS) SYSTEM.

GENERAL CONTRACTOR: _____ ELECTRICAL CONTRACTOR: _____

BY: _____ BY: _____

DATE: _____ DATE: _____

START HERE

A VISUALLY INSPECT THE MAIN ELECTRICAL PANEL (MDP)

YES NO N/A

1. IS AN EQUIPMENT GROUND BAR INSTALLED SUCH THAT IT IS ELECTRICALLY CONNECTED TO THE PANEL?
2. DO ALL NEUTRAL CONDUCTORS TERMINATE ONLY TO THE NEUTRAL BAR?
3. DO ALL EQUIPMENT GROUND CONDUCTORS TERMINATE ONLY TO THE EQUIPMENT GROUND BAR?
4. DOES THE ISOLATED GROUND CONDUCTOR (GREEN W/YELLOW STRIPE) TERMINATE ON THE EQUIPMENT GROUND BAR?
5. IS THERE AN APPROPRIATE ELECTRICAL CONNECTION (BOND) BETWEEN THE NEUTRAL BAR AND THE EQUIPMENT GROUND BAR?
6. DOES THE GROUNDING SYSTEM COMPLY WITH MCDONALD'S "BUILDING ELECTRICAL GROUNDING DETAIL"?
7. IS A SURGE PROTECTOR INSTALLED THAT COMPLIES WITH MCDONALD'S "TVSS INSTALLATION GUIDE" OR DETAIL?
8. ARE ALL ELECTRICAL CONNECTIONS (WIRING & BUSING) PROPERLY TIGHTENED?
9. ARE ALL CIRCUIT BREAKERS CLEARLY LABELED?

B VISUALLY INSPECT THE PANEL "CP" THAT POWERS POS

YES NO N/A

1. IS AN EQUIPMENT GROUND BAR INSTALLED SUCH THAT IT IS ELECTRICALLY CONNECTED TO THE PANEL?
2. IS AN ISOLATED GROUND BAR INSTALLED SUCH THAT IT IS ELECTRICALLY INSULATED FROM THE PANEL?
3. DO ALL NEUTRAL CONDUCTORS TERMINATE ONLY TO THE NEUTRAL BAR?
4. DO ALL EQUIPMENT GROUND CONDUCTORS TERMINATE ONLY TO THE EQUIPMENT GROUND BAR?
5. DO ALL ISOLATED GROUND CONDUCTORS (GREEN W/YELLOW STRIPE) TERMINATE ONLY TO THE ISOLATED GROUND BAR?
6. ARE ALL ELECTRICAL CONNECTIONS (WIRING & BUSING) PROPERLY TIGHTENED?
7. ARE ALL POS AND COD CIRCUIT BREAKERS ON THE SAME PANEL?
8. ARE ALL CIRCUIT BREAKERS CLEARLY LABELED?
9. DO ALL POS & COD CIRCUIT BREAKERS HAVE A LOCKING MECHANISM ON THEIR HANDLES TO PREVENT THEM FROM BEING SHUT OFF BY MISTAKE?
10. DOES THE FEEDER CIRCUIT FOR THIS SUBPANEL CONTAIN PHASE, NEUTRAL ONE EQUIPMENT GROUND AND ONE ISOLATED GROUND CONDUCTORS THAT ARE PROPERLY TERMINATED (SEE POS & COD ISO GND/DED CKT DETAIL)?

VISUALLY INSPECT ALL REMAINING ELECTRICAL SUBPANELS

YES NO N/A

1. IS AN EQUIPMENT GROUND BAR INSTALLED SUCH THAT IT IS ELECTRICALLY CONNECTED TO THE PANEL?
2. DO ALL NEUTRAL CONDUCTORS TERMINATE ONLY TO THE NEUTRAL BAR?
3. DO ALL EQUIPMENT GROUND CONDUCTORS TERMINATE ONLY TO THE EQUIPMENT GROUND BAR?
4. ARE ALL ELECTRICAL CONNECTIONS (WIRING & BUSING) PROPERLY TIGHTENED?
5. ARE ALL CIRCUIT BREAKERS CLEARLY LABELED?
6. DOES THE FEEDER CIRCUIT FOR THIS SUBPANEL CONTAIN PHASE, NEUTRAL AND ONE EQUIPMENT GROUND CONDUCTORS THAT ARE PROPERLY TERMINATED? (SEE BUILDING ELECTRICAL GROUNDING DETAIL)

C VISUALLY INSPECT THE POS BRANCH CIRCUITS

YES NO N/A

1. ARE THE POS BRANCH CIRCUITS ROUTED IN THEIR OWN CONDUIT BY THEMSELVES?
2. IF THE POS BRANCH CIRCUIT IS ROUTED ABOVE GRADE, IS IT IN A METALLIC CONDUIT?
3. DOES EACH POS BRANCH CIRCUIT CONTAIN: ONE PHASE (BLACK COLORED INSULATION) ONE NEUTRAL (WHITE COLORED INSULATION) ONE EQUIPMENT GROUND (GREEN COLORED INSULATION) ONE ISOLATED GROUND (GREEN W/YELLOW STRIPE COLORED INSULATION).
4. DO ALL POS BRANCH CIRCUITS TERMINATE AT EITHER AN IG4700, IG4710, IG5261, IG5262 RECEPTACLES OR ANY COMBINATION OF THESE?
5. ARE ALL ELECTRICAL TERMINATIONS TO IG RECEPTACLES MADE WITH SOLID #12 AWG WIRE CAPTURED AROUND THE SCREW BARREL AND SUITABLY TIGHTENED?
6. ARE ALL BRANCH CIRCUIT CONNECTIONS PROPERLY TIGHTENED?
7. ARE THE CORRECT AMOUNT AND TYPE OF IG RECEPTACLES PROVIDED AS SHOWN IN THE ELECTRICAL ROUGH-IN PLAN, NOTES AND INFORMATION?
8. DO ALL POS RECEPTACLES HAVE ORANGE "COMPUTER ONLY" COVERPLATES?
9. DO ALL POS BRANCH CIRCUITS COMPLY WITH THE "POS & COD ISOLATED GROUND/DEDICATED CIRCUIT DETAIL?

D VISUALLY INSPECT THE POS BRANCH CIRCUIT FOR THE COD & KIOSK

YES NO N/A

1. ARE THE COD AND KIOSK BRANCH CIRCUITS ROUTED IN THEIR OWN CONDUIT BY THEMSELVES?
2. DOES EACH COD AND KIOSK BRANCH CIRCUIT CONTAIN;
   - ONE PHASE (BLACK COLORED INSULATION),
   - ONE NEUTRAL (WHITE COLORED INSULATION),
   - ONE EQUIPMENT GROUND (GREEN COLORED INSULATION),
   - ONE ISOLATED GROUND (GREEN W/YELLOW STRIPE COLORED INSULATION).
3. ARE THE COD(S) AND KIOSK(S) POWERED FROM THE SAME PANEL AS THE POS?
4. DO THE BREAKERS FOR THE COD(S) AND KIOSK(S) HAVE A LOCKING MECHANISM ON THEIR HANDLES THAT WILL PREVENT IT FROM BEING SHUT OFF?
5. DO THE COD BRANCH CIRCUIT(S) COMPLY WITH THE "POS & COD ISOLATED GROUND/DEDICATED CIRCUIT DETAIL?

ARE ALL BOXES CHECKED "YES"?

NO → REWORK ELECTRICAL SYSTEM TO BRING INTO COMPLIANCE WITH MCDONALD'S SPECIFICATIONS

YES → FINISHED

ALL WORK IS NOT CONSIDERED TO MEET MCDONALD'S SPECIFICATIONS UNTIL THE INSTALLED ELECTRICAL SYSTEM SUPPORTS A "YES" ANSWER FOR ALL QUESTIONS ASKED.

AS PART OF THIS PROCESS, THE EC AND THE GC WILL BE REQUIRED TO SIGN THE ELECTRICAL CERTIFICATION DOCUMENT INDICATING THAT THE INSTALLED ELECTRICAL SYSTEM MEETS MCDONALD'S SPECIFICATIONS.

NOTICE:

CHANGES SHALL NOT BE MADE TO THE POS ELECTRICAL SYSTEM AFTER THE POS EQUIPMENT HAS BEEN INSTALLED WITHOUT FIRST NOTIFYING THE POS VENDOR.

IF CHANGES ARE MADE TO THE POS ELECTRICAL SYSTEM AFTER THE CERTIFICATION PROCESS HAS BEEN COMPLETED, THEN A SYSTEM RE-CERTIFICATION SHALL BE REQUIRED.

REV	DATE	DESCRIPTION	BY

Robert D. Anderson ,Inc.
MEP Engineering & Design Consultants
HVAC*Illumination*Plumbing*Power Distribution*Controls

Robert D. Anderson
4403 Zion Rd.
Garland ,TX 75043

voice: 972-814-7324
email: robert.d.andersonrib@cglocal.net
contact: Mark Swanson-Project Manager
voice: 817-556-0986
email: mark@mepdesignrts.com

DRAWING IS DIAGRAMMATIC, AND AS SUCH AGREEMENTS FOR UNKNOWN FIELD CONDITIONS MAY BE REQUIRED. THIS DRAWING WAS PREPARED FOR SPECIFIC USE ON THE DATE AND SITE INDICATED HEREON. ANY REUSE OF THIS DRAWING FOR OTHER SITES OR ANY OTHER PROJECT REQUIRES THE SERVICES OF THE ENGINEER. DRAWINGS ARE SUBJECT TO COPYRIGHT AND MAY NOT BE REPRODUCED, DISTRIBUTED, PUBLISHED OR USED IN ANY WAY WITHOUT THE EXPRESS WRITTEN CONSENT OF ROBERT D. ANDERSON, P.E.

STATE OF TEXAS
ROBERT D. ANDERSON
44987
LICENSED PROFESSIONAL ENGINEER
09/24/24
Firm No. F-5324

PREPARED FOR: McDonald's USA, LLC
© 2024 McDonald's USA, LLC
These drawings and specifications are the confidential and proprietary property of McDonald's USA, LLC and shall not be copied or reproduced without written authorization. The contract documents were prepared for use on this specific site in conjunction with the issue date cited on the cover sheet. Modifications to these plans and specifications or any of these drawings for reference or example on another project requires the services of properly licensed architects and engineers. Reproduction of the contract documents for reuse on another project is not authorized.

DRAWN BY MES | STD ISSUE DATE 2024 | REVIEWED BY JAW | DATE ISSUED 10/11/2024

TITLE: 2024 STANDARD BUILDING – BB20 4584-WOOD/WOOD

DESCRIPTION: WOOD BEARING WALLS WITH HARDIE SIDING, WOOD ROOT TRUSS FRAMING, EIFS/BATTEN/METAL/HARDIE SIDING EXTERIOR FINISHES

SITE ID: 042-3591 | SITE ADDRESS: NWC OF FM 460 & FM 740, FORNEY TEXAS

JAWA 24-0151

SHEET NO. E1.0
POS RISER DIAGRAM

K:\STANDARDS\PROTOTYPES\2024 PROTOTYPES\4584\2024 BB20 4584 MS HB FULL SET CAD\ELEC.DWG 09-23-2024 08:40

TRASH CORRAL POWER:
3/4"C–4#10 & 1#10 GND TO A 20A–1P CB IN PANEL AP–2 FOR WP GFCI DCO. VERIFY EXACT LOCATION AND ALL REQUIREMENTS OF TRASH CORRAL IN FIELD.

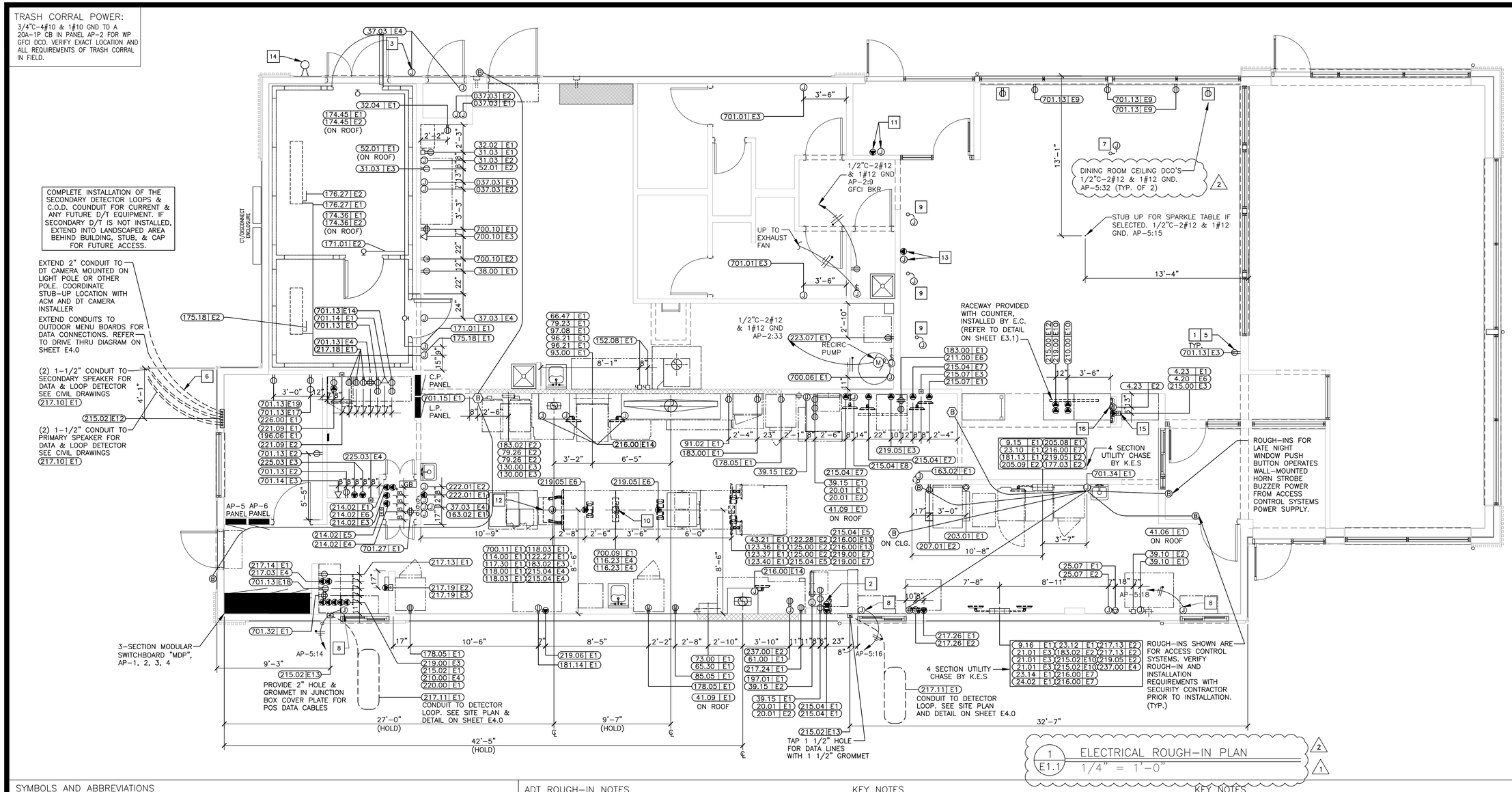

1 E1.1 ELECTRICAL ROUGH–IN PLAN
1/4" = 1'–0"

SYMBOLS AND ABBREVIATIONS

SYMBOL	DESCRIPTION	SYMBOL	DESCRIPTION
	SINGLE POLE SWITCH, 3W=THREE WAY SWITCH, K=KEYED SWITCHED, VS=VACANCY SENSOR	(B)	BUZZER
T	MANUAL SWITCH (T=THERMAL OVERLOADS)	(B)	BUTTON FOR BUZZER
	TRANSFORMER		PULLBOX
	JB WITH DUPLEX CONVENIENCE OUTLET (FLUSH WITH CEILING)		PANELBOARD
	JB WITH SINGLE CONVENIENCE OUTLET		CIRCUIT BREAKER
	JB WITH DUPLEX CONVENIENCE OUTLET	A	AMPERES
	JB WITH TWO DUPLEX CONVENIENCE OUTLETS	ACM	AREA CONSTRUCTION MANAGER
	JB WITH SPECIAL PURPOSE OUTLET	AFF	ABOVE FINISHED FLOOR
	JB WITH ISOLATED GROUND OUTLET	C	CONDUIT
	= IG4710, =IG5261, =IG4700A, =IG5262	CCT	CIRCUIT
	INTERCOM STATION W/ 3/4"C– TO MAIN STATION	EC	ELECTRICAL CONTRACTOR
	TELEPHONE JACK	GC	GENERAL CONTRACTOR
(J)	JUNCTION BOX – WALL OR CEILING MOUNTED	GFI/GFCI	GROUND FAULT CIRCUIT INTERRUPTER
	DISCONNECT SWITCH	GND	GROUND
(S)	STUB UP THRU ROOF	IG	ISOLATED GROUND
(T)	THERMOSTAT SENSOR W/ 1/2"C– UP TO CEILING SPACE	JB	JUNCTION BOX
(M)	MOTOR CONNECTION	KES	KITCHEN EQUIPMENT SUPPLIER
	CONDUIT RUN CONCEALED IN CEILING OR WALLS	MLO	MAIN LUGS ONLY
	CONDUIT RUN IN FLOOR SLAB	WP	WEATHERPROOF
|X	HOT (SHORT), NEUTRAL (LONG), EQUIP GRD (LONG WITH DOT), & & 'X' DENOTES ISOLATED GRD	(CO)	CARBON MONOXIDE SENSOR
	J–BOX WITH FINAL EQUIPMENT CONNECTION	GB	GROUND BUS TERMINAL
(OS)	CEILING MOUNTED OCCUPANCY SENSOR	(DS)	DAYLIGHT SENSOR

ADT ROUGH–IN NOTES

1. COORDINATE EXACT INSTALLATION REQUIREMENTS WITH ADT PRIOR TO INSTALLATION TEL. 800–417–8238
2. EC SHALL PROVIDE A 2 GANG 3 25/32" X 3 25/32" X 3 1/2"D JUNCTION BOX AT DOOR FOR INSTALLATION OF DOOR ALARM UNIT. STUB 1/2"C ABOVE CEILING FROM JUNCTION BOX. PROVIDE 1/2"C FROM J–BOX TO DOOR MAGNETIC SWITCH LOCATION.
3. EC SHALL PROVIDE 4" X 4" JUNCTION BOX ABOVE CEILING FOR INSTALLATION OF LOW VOLTAGE TRANSFORMER. VERIFY EXACT LOCATION WITH ADT PRIOR TO INSTALLATION. PROVIDE 1/2"C–2#12 TO LOCKOUT TYPE CB IN PANEL LP–1.

GENERAL NOTES

1. SEE SHEET E3.0 FOR PANEL & CIRCUIT BREAKER ASSIGNMENT, VOLT/PH, FLA, BREAKER SIZE, COND/WIRE, RECEPTACLE TYPE, HEIGHT ABOVE FINISHED FLOOR, REQUIREMENTS & REMARKS FOR ALL ELECTRICAL EQUIPMENT.
2. SEE LOW VOLTAGE CABLE MANAGEMENT SPECIFICATION ON SHEET E1.0 FOR POS, DATA, AND SOUND SYSTEM REQUIREMENTS.
3. GC/EC SHALL COORDINATE LOCATION AND ALL REQUIREMENTS OF CT& METER CABINET WITH LOCAL UTILITY COMPANY. CT & METER CABINET SHALL NOT BE INSTALLED ON D/T SIDE OF BUILDING. GC SHALL PAINT TO MATCH BUILDING COLOR.

KEY NOTES

1. TAMPER RESISTANT GFCI DUPLEX RECEPTACLE IN PUBLIC AREAS. EC SHALL PROVIDE HUBBELL GFTRST* ("*": AL=ALMOND, BK=BLACK, –=BROWN, GY=GRAY, I=IVORY, LA=LIGHT ALMOND, R=RED, W=WHITE). SPECIFIED RECEPTACLE BECOMES DE–ENERGIZED UPON FAILURE OF GFCI DEVICE. NO SUBSTITUTIONS.(TYPICAL)
2. SEE POS ELECTRICAL RISER DIAGRAM ON SHEET E1.0. (TYPICAL)

KEY NOTES

3. EC TO FURNISH AND INSTALL A FLUSH MOUNTED JUNCTION BOX WITH WEATHERPROOF GASKET AND OUTDOOR WEATHERPROOF, 24 VOLT CO2 HORN/STROBE UNIT COMPATIBLE WITH CO2 ALARM SYSTEM – EDWARDS GENESIS WGAVRN OR APPROVED EQUAL. STROBE SHALL HAVE AN AMBER COVER AND MEET ALL LOCAL REGULATORY REQUIREMENTS FOR SPECIFICATIONS AND INSTALLATION. PROVIDE A 3/4" CONDUIT STUB–IN INTO BUILDING WITH THERMOPLASTIC BUSHING FROM WEATHERPROOF BACKBOX. PROVIDE FINAL WIRING TERMINATIONS AT HORN/STROBE UNIT AND THEN PROVIDE 36 INCHES OF PIGTAIL WIRING FROM HORN/STROBE INTO THE BUILDING AND NEATLY COIL FOR FINAL CONNECTION. FINAL WIRING CONNECTION FROM OUTDOOR HORN/STROBE PIGTAILS TO THE CO2 ALARM SYSTEM INSTALLATION TO BE PROVIDED BY BEVERAGE INSTALLER.
4. NOT USED.
5. COORDINATE LOCATION OF RECEPTACLES SO THAT RECEPTACLES ARE LOCATED ON FULL HEIGHT WALLS PER THE DECOR PLAN. STUB UP AND CIRCUIT IN HALF WALL FOR RECEPTACLES NOT ON FULL HEIGHT WALLS, CONFIRM FINAL LOCATIONS WITH DECOR DRAWINGS PRIOR TO ROUGH–IN.
6. IF MOUNTED TO A LIGHTING POLE, DT CAMERA SHALL ONLY BE INSTALLED ON A POLE WITH MAXIMUM OF (2) LIGHTING HEADS. PROVIDE ISOLATION OF DT CAMERA MOUNTING HARDWARE AND POLE TO PREVENT BI–METALLIC OR GALVANIC CORROSION.
7. E.C. TO PROVIDE AN ALLOWANCE IN BID TO PROVIDE TWO(2) FLEXIBLE POWER CONNECTIONS FOR POWER TO FURNITURE/ FAMILY EXPERIENCE ELEMENTS AS PART OF THE DECOR PACKAGE. E.C. SHALL VERIFY EXACT LOCATIONS IN FIELD AND WITH DECOR DRAWINGS. PROVIDE ALL NECESSARY MATERIALS AND LABOR FOR A COMPLETE AND FULLY NEC CODE COMPLIANT INSTALLATION. ALL COMPONENTS SHALL BE FED FROM A GFCI TYPE CIRCUIT BREAKER AND BRANCH CIRCUIT SHALL CONTAIN TWO PATHS OF GROUNDING (CONDUIT BODY AND AN INSULATED GROUNDING CONDUCTOR) TO COMPLY WITH McDONALD'S GROUNDING STANDARDS.
8. DRIVE THRU WINDOW POWER, CONFIRM REQUIREMENTS WITH MANUFACTURER DRAWINGS.

KEY NOTES

9. PROVIDE POWER FOR CONNECTION TO SELF ORDER KIOSKS. COORDINATE EXACT LOCATION OF KIOSKS WITH DECOR DRAWINGS. PROVIDE 2#12, 1#12 GRD., & 1#12 ISOLATED GROUND ON A 20A DEDICATED CIRCUIT FED FROM THE CP PANEL FOR EVERY KIOSK.
10. VERIFY DROP CORDS AND RECEPTACLES DO NOT FALL BELOW HEIGHTS LISTED ON E3.0 ELECTRICAL SCHEDULE. RECEPTACLES SHOULD BE LOCATED AT HEIGHTS TO AVOID CONTACT WITH HOT APPLIANCES.
11. PROVIDE POWER AND DATA ROUGH–INS FOR DIGITAL MERCHANDISER. EXTEND CIRCUIT TO THIS LOCATION FROM FRONT COUNTER MERCHANDISER IN SERVICE AREA. EXTEND J–HOOKS FROM SERVICE AREA FOR DATA CABLES. REFER TO 3/E3.1.
12. EC TO INSTALL DROP CORDS JUSTIFIED TO THE DRIVE THRU SIDE OF THE BUILDING.
13. PROVIDE POWER AND DATA ROUGH–INS FOR CASH HANDLERS REFER TO 4/E3.1 FOR MORE INFORMATION. COORDINATE EXACT LOCATION WITH DECOR DRAWINGS.
14. AT&T TO PROVIDE #8 GRD CONDUCTOR FROM BUILDING EXTERIOR WIRELESS ACCESS POINT TO ABOVE INTERIOR CEILING. EC TO EXEND CONDUCTOR TO BUILDING GROUNDING SYSTEM. COORDINATE EXACT LOCATION OF ACCESS POINT IN FIELD WITH AT&T.
15. CONTRACTOR TO PUNCH HOLES IN SERVICE POD FOR CABLE AND CONDUIT ROUTING. UTILIZE BUSHINGS PROVIDE WITH SERVICE POD TO PROTECT CABLES.
16. REFER TO DETAIL ON A3.1 FOR DIMENSIONS OF DIGITAL MERCHANDISER ROUGH–INS.

REV	DATE	DESCRIPTION	BY
1	04/08/2025	COUNTY COMMENTS, MCD QC COMMENTS, & UTILITY COORDINATION	
2	05/09/2025	PLAYPLACE ADDITION	

Robert D. Anderson ,Inc.
MEP Engineering & Design Consultants
HVAC*Illumination*Plumbing*Power Distribution*Controls
Robert D. Anderson
4403 Zion Rd.
Garland ,TX 75043
voice: 972-814-7324
email: robert.d.andersonrb@cglegal.net
contact: Mark Swanson-Project Manager
voice: 817-556-0986
email: mark@mepdesigntx.com

DRAWING IS DIAGRAMMATIC, AND AS SUCH ADJUSTMENTS FOR UNKNOWN FIELD CONDITIONS MAY BE REQUIRED. THIS DRAWING WAS PREPARED FOR SPECIFIC USE ON THE DATE AND SITE INDICATED HEREON. ANY USE OF THIS DRAWING ON ANOTHER SITE OR FOR ANOTHER PROJECT REQUIRES THE SERVICES OF THE ENGINEER. DRAWINGS ARE SUBJECT TO COPYRIGHT AND MAY NOT BE REPRODUCED, DISTRIBUTED, PUBLISHED OR USED IN ANY WAY WITHOUT THE EXPRESS WRITTEN CONSENT OF ROBERT D. ANDERSON, P.E.

STATE OF TEXAS
ROBERT D. ANDERSON
44987
LICENSED PROFESSIONAL ENGINEER
05/12/25
Firm No. F-5324

PREPARED FOR:
McDonald's USA, LLC
© 2024 McDonald's USA, LLC
These drawings and specifications are the confidential and proprietary property of McDonald's USA, LLC and shall not be copied or reproduced without written authorization. The contract documents were prepared for use on this specific site in conjunction with its issue date and are not suitable for use on any other project. Modification of these drawings for reference or example on another project requires the person or properly licensed architect and engineer. Reproduction of the contract documents for use on another project is not authorized.

DRAWN BY	MES
STD ISSUE DATE	2024
REVIEWED BY	JAW
DATE ISSUED	10/11/2024

TITLE: 2024 STANDARD BUILDING – BB20
4584–WOOD/WOOD
DESCRIPTION: WOOD BEARING WALLS WITH HARDIE SIDING
WOOD ROOF TRUSS FRAMING
EIFS/BATTEN/METAL/HARDIE SIDING EXTERIOR FINISHES
SITE ID: 042–3591
SITE ADDRESS: NWC OF FM 460 & FM 740, FORNEY TEXAS

SHEET NO.
JAWA 24–0151
E1.1
ROUGH–IN PLAN

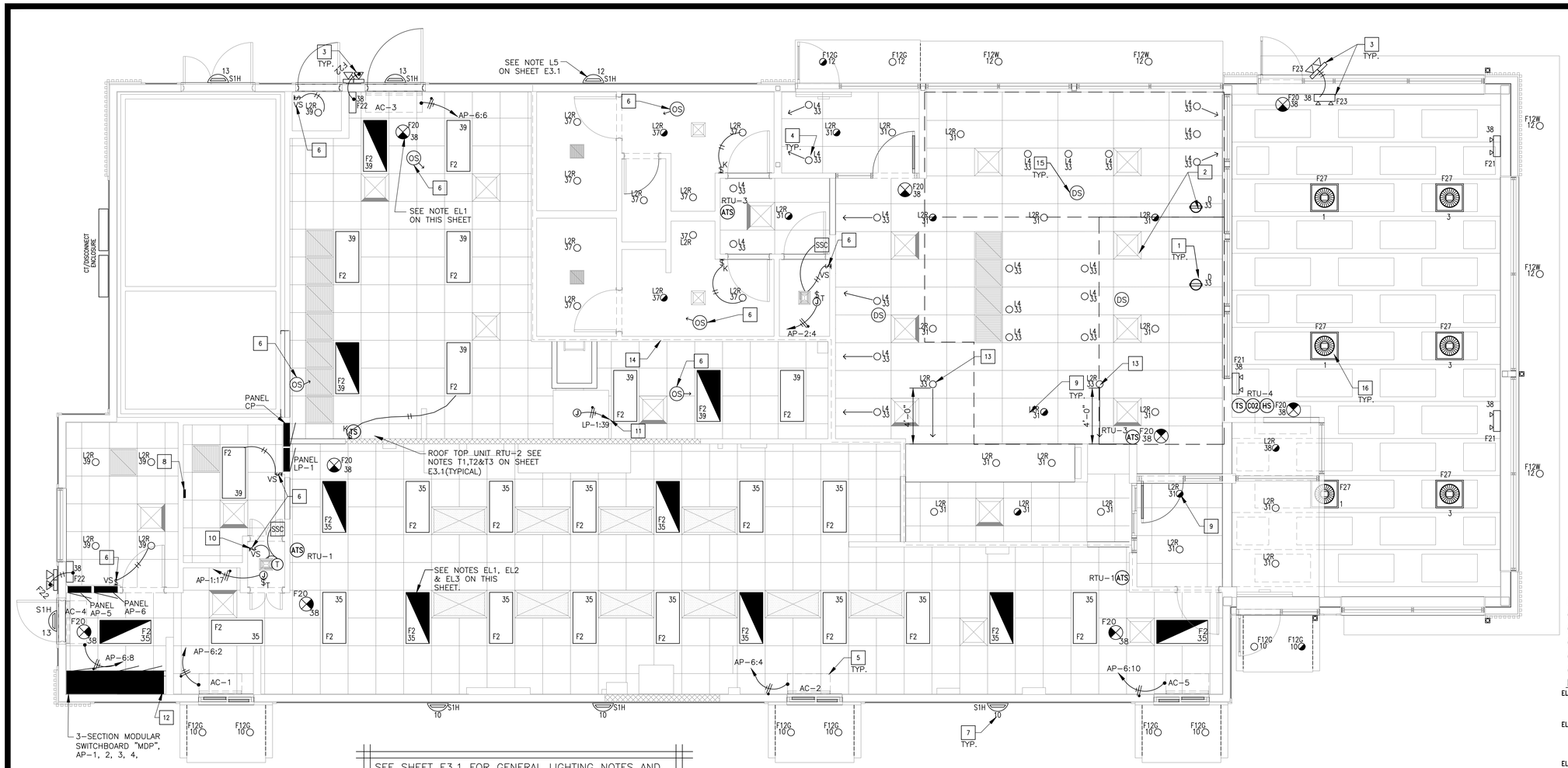

SEE SHEET E3.1 FOR GENERAL LIGHTING NOTES AND "ROOF PLAN" (SHEET E2.1) FOR ADDITIONAL ELECTRICAL ROUGH-IN & LIGHTING REQUIREMENTS.

1 E2.0 LIGHTING FLOOR PLAN 1/4"=1'-0"

KEY

DENOTES FIXTURE TYPE — F2

DENOTES CIRCUIT NUMBER — 41

LIGHTING FIXTURES SHOWN HALF HATCHED SHALL BE WIRED TO AN EMERGENCY INVERTER AND CIRCUITED AS SWITCHED EMERGENCY FIXTURES SO THE FIXTURE IS CONTROLLED VIA TIMECLOCK BUT TURNS ON UPON LOSS OF POWER. SEE NOTE EL3 ON THIS SHEET. COORDINATE LOCATION WITH DECOR.

LIGHTING FIXTURES SHOWN WITH ARROW DENOTES GENERAL DIRECTION TO AIM ADJUSTABLE FIXTURES. VERIFY IN FIELD.

KEY NOTES

1. CENTER PENDANT LIGHTS OVER TABLES (TYPICAL)
2. ALL SOFFIT LOCATIONS, LIGHTING, & SUPPLY GRILLS SHALL BE COORDINATED WITH DECOR COMPANY DRAWING PRIOR TO INSTALLATION.
3. EC SHALL INSTALL AND CONFIGURE REMOTE EMERGENCY LIGHTING AT ALL EGRESS EXTERIOR DOORS FOR MAXIMUM ILLUMINATION AT POINTS OF EGRESS. INSTALL WP J-BOX WITHIN SOFFIT TO ALLOW A FLUSH INSTALLATION OF ANY EXTERIOR EMERGENCY EGRESS LIGHTING (TYPICAL).
4. OPTIONAL ADJUSTABLE WALL WASH FIXTURE TO ILLUMINATE LOGO OR GRAPHICS. EC SHALL VERIFY EXACT LOCATION SO AS TO ADEQUATELY ILLUMINATE McDONALD'S ARCH LOGO SIGN AND GRAPHICS.
5. AIR CURTAIN UNIT. NON HEATED VERSION TO USE 1/2"C. 2#12, 1#12GRD. HEATED VERSION TO USE 1"C. 2#6, 1#10 GRD. (TYPICAL).
6. PROVIDE DUAL TECHNOLOGY CEILING MOUNTED OCCUPANCY SENSOR OR WALL MOUNTED VACANCY SENSOR AS SHOWN. ORDER ALL SENSORS FROM SECURITY LIGHTING SYSTEMS, INC.
7. RADIAL WALL SCONCE. SEE NOTE L2 ON SHEET E3.1 AND ARCHITECTURAL ELEVATIONS ON SHEETS A2.0 & A2.1. (TYPICAL)
8. BUILDING AUTOMATION SYSTEM LOCATION. SEE LIGHTING CONTROL DETAILS ON SHEET E4.1.
9. PROVIDE LIGHTING INVERTER FOR USE WITH FIXTURES SHOWN SLASHED. MODEL #LG125T SHOULD BE USED FOR L2R, L4 & F12G WITH NOT MORE THAN SEVEN DOWNLIGHTS CONNECTED TO EACH INVERTER, AND NOT MORE THAN TWO F2 FIXTURES. IF DECOR USES ALTERNATE FIXTURES, COORDINATE INVERTER TO BE USED WITH LIGHTING SUPPLIER. E.C. SHALL VERIFY THE QUANTITY OF FIXTURES THAT CAN BE CONNECTED WITHOUT EXCEEDING OPERATING CAPACITY OF UNIT AND PROVIDE ADDITIONAL CIRCUITS AND INVERTERS AS REQUIRED. (TYPICAL)
10. CENTER VACANCY SENSOR SWITCH OPPOSITE COMPUTER RACK IN A LOCATION ACCESSIBLE FROM BOTH DOORS FOR CONTROL OF CEILING MOUNTED LIGHT, IN DATA ROOM. FAN CONTROLLED BY LOCAL THERMOSTAT.
11. PROVIDE POWER FOR LIGHT WITHIN EXHAUST HOOD. INTEGRATE INTO LOCAL LIGHTING CONTROLS.
12. LIGHTING CONTACTORS IN NEMA 1 ENCLOSURE JUST BELOW CEILING. EC SHALL PROVIDE 120 VOLT CONTROL CIRCUIT TO CONTACTOR PANEL. VERIFY EXACT LOCATION IN FIELD AND REFER TO DRAWING E4.1 FOR ADDITIONAL DETAILS.
13. ADJUST FIXTURE TO ILLUMINATE DELIVERY POD SHELVING.
14. DRAFT STOP ABOVE CEILING, SEAL ALL ELECTRICAL PENETRATIONS.
15. NEW DAYLIGHT SENSOR TO BE INSTALLED TO CONTROL DAYLIGHT AREAS IN THE DINNING AREAS. ORDER ALL DAYLIGHT SENSORS FROM; SECURITY LIGHTING SYSTEMS, INC.
16. LIGHTING SHALL BE INSTALLED SO THAT IT CANNOT BE ACCESSED FROM ANY CUSTOMER LOCATION ON OR WITHIN THE TOY ELEMENT. LIGHTING FIXTURES SHALL BE KEPT A MINIMUM 3'-0" (~1 METER) AWAY FROM THE TOY AND STRUCTURAL ELEMENTS. REFER TO MCDONALD'S PROJECT MANUAL SPECIFICATIONS, SECTION 16511-INTERIOR LIGHTING FOR ADDITIONAL INFORMATION AND MCDONALD'S SPECIFIC ELECTRICAL INSTALLATION REQUIREMENTS. (TYPICAL)

2

EMERGENCY LIGHTING NOTES

EL1. EC SHALL VERIFY ALL REQUIREMENTS AND FINAL EMERGENCY LIGHTING LOCATIONS WITH LOCAL AUTHORITIES. INCLUDE ALL COSTS IN BASE BID.

EL2. IF NOT INSTALLED BY MANUFACTURER, EC SHALL BE RESPONSIBLE FOR THE COMPLETE INSTALLATION OF THE EMERGENCY INVERTER IN SWITCHED EMERGENCY FIXTURES SHOWN ON THIS SHEET.

EL3. LED FIXTURES DENOTED AS SWITCHED EMERGENCY SHALL BE CONNECTED TO AN INVERTER. INVERTER SHALL BE CAPABLE OF ILLUMINATING FIXTURE FOR 1.5 HOURS TO COMPLY WITH NEC SECTION 700 AND UL924.

EL4. EMERGENCY BATTERY LIGHTING WALL PACKS IN PLAYPLACE SHALL BE LOCATED SO AS TO PROVIDE FOR MAXIMUM ILLUMINATION OF AREA. EC SHALL VERIFY EXACT PLACEMENT IN THE FIELD WITH McDONALD'S ACM. (IF APPLICABLE)

EL5. EMERGENCY LIGHTING HAS BEEN DESIGNED PER NFPA 101 TO MAINTAIN 1 FC IN PATH OF EGRESS. IF FIELD CONDITIONS REQUIRE ANY CHANGES TO LIGHTING DESIGN, EMERGENCY LIGHTING, SHALL BE INSTALLED TO MEET THE ABOVE REQUIREMENTS.

McDONALD'S SITE SIGNAGE:

EC SHALL PROVIDE:

ELECTRICAL CONTRACTOR SHALL COORDINATE POWER REQUIRED FOR ROAD SIGN. MOST SIGNS REQUIRE (1) 20 AMP 120V CIRCUIT. IF USED A 90-200 SIGN REQUIRES (4) 20 AMP 120V CIRCUITS OR ONE 1-PHASE 60 AMP 120/208V CIRCUIT. COORDINATE WITH SUPPLIERS DRAWINGS.
(1) 20 AMP 208 VOLT CIRCUIT, EC TO WIRE 2#12 TO 208 VOLT FLAG FLOODLIGHTS.
(1) 20 AMP 120 VOLT CIRCUIT TO D.C.O. IN ROAD SIGN BASE IF REQUIRED.
(2) 20 AMP 120 VOLT CIRCUITS FOR INGRESS/EGRESS DIRECTIONAL SIGNS (IF APPLICABLE).

*VERIFY EXACT LOCATIONS/TYPES/QUANTITIES OF ALL THE ABOVE WITH SITE/CIVIL PLANS AND MCD ACM.

LIGHTING FIXTURE SCHEDULE:

MARK	SYMBOL	DESCRIPTION	DIFFUSER	LAMPS WATTS	LAMPS TYPE	BALLAST	MOUNTING	MANUFACTURER AND CATALOG NUMBER
F2		2' X 4' GRID TROFFER	PRISMATIC ACRYLIC	44W	LED	–	RECESSED	SECURITY LIGHTING: # LCAT24-35HLG-EDU-WP-GK
F7		1' X 4' GRID TROFFER	PRISMATIC ACRYLIC	44W	LED	–	RECESSED	SECURITY LIGHTING # LCAT14-35HLG-EDU-WP-GK
L2R		4" LED ADJUSTABLE DOWN LIGHT	–	16W	LED	–	RECESSED	SECURITY LIGHTING # RDA-136LM-30-FL-S/RDA-136-H VERIFY DOWNLIGHT TO BE USED WITH PHOTOMETRIC
L4		3" LED ADJUSTABLE DOWN LIGHT	–	7W	LED	–	RECESSED	SECURITY LIGHTING # RDA-60LM-30-NF-S/RDA-60-H VERIFY DOWNLIGHT TO BE USED WITH PHOTOMETRIC 2
F12G		6" LED DOWN LIGHT – GOLD TRIM	–	12.5W	LED	–	RECESSED	SECURITY LIGHTING # 8542-5CCT
B		RING PENDANT	–	96W EA	LED	–	SUSPENDED	SECURITY LIGHTING # MPLN-63R-400-LM-30-DGCDS
D		ORBIT PENDANT	–	19W	LED	–	SUSPENDED	SECURITY LIGHTING # MPLN-11R-120-LM-30-DGCDG
E		LUNA CEILING ELEMENT	–	55W	LED	–	SURFACE	ACOUSTICAL SURFACES # MIKE@ACOUSTICALSURFACES.COM
F20		EXIT SIGN WITH BATTERY BACKUP	–	1.8W	LED	–	SURFACE	SECURITY LIGHTING: EVEURWE. SEE NOTE LS2 ON THIS SHEET.
F21		2 HEADED EMERGENCY BATTERY LIGHT	–	–	LED		SURFACE TO WALL OR CEILING	SECURITY LTG. #EV4D
F22		EMERG BATTERY & 2 REMOTE HEADS	–	–	LED	=	SURFACE TO WALL OR SOFFIT	SECURITY LTG. #EV4D-02L-0/EVODB
F23		2 HEADED EMERG LIGHT & 2 REMOTE HEAD IF REQ'D	–	–	LED	–	SURFACE TO WALL OR SOFFIT	SECURITY LTG. #EV4D/EVODB
S1H		"DOWN ONLY" RADIAL WALL SCONCE – SILVER	TEMPERED GLASS	(1)-14W	LED	–	SURFACE TO WALL	SECURITY LIGHTING: #RWSC-36L-5K-DO-U-PS
F27		LED HIGHBAY	–	139W	LED		PENDANT	SECURITY LIGHTING # SLHBL-60L-U-A-4K-N-070-WH-WP

LIGHTING SCHEDULE NOTES:

LS1. ORDER LED EXIT SIGNS WITH LETTER COLORS THAT COMPLY WITH LOCAL CODES.
– FOR RED LETTERS USE #EVE-U-R (UNIVERSAL),
– FOR GREEN LETTERS USE #EVE-U-G (UNIVERSAL), OR
IF THE ABOVE EXIT SIGNS DO NOT COMPLY WITH LOCAL CODES USE: LED SIGN WITH BATTERY BACKUP, LETTER SIZE, COLOR, TYPE & DIRECTIONAL ARROWS AS REQUIRED BY THE LOCAL AUTHORITIES.

LS2. ALL INTERIOR LIGHT FIXTURES SHALL BE 120 VOLT UNLESS NOTED OTHERWISE.

LS3. LIGHTING FIXTURES HAVE BEEN CHOSEN TO ACHIEVE MAXIMUM ENERGY CONSERVATION WHILE MAINTAINING ADEQUATE LEVEL OF ILLUMINATION. SPECIFICATIONS SHALL BE STRICTLY FOLLOWED. ANY DEVIATION FROM THE SPECIFICATIONS SHALL BE APPROVED IN WRITING BY McDONALD'S CORPORATION.

ORDER ALL LIGHT FIXTURES FROM:

SECURITY LIGHTING SYSTEMS, INC.
PHONE: 1-800-LIGHT-IT
EMAIL: QUOTATIONS@SECURITYLIGHTING.COM

CS ILLUMINATIONS
PHONE: 760-477-1244
EMAILS: MCD@CSILLUMINATIOINS.COM
WWW.CSILLUMINATIONS.COM/MCD

REV	DATE	DESCRIPTION	BY
1	04/08/2025	COUNTY COMMENTS, M&O QC COMMENTS, & UTILITY COORDINATION	
2	05/09/2025	PLAYPLACE ADDITION	

Robert D. Anderson ,Inc.
MEP Engineering & Design Consultants
HVAC*Illumination*Plumbing*Power Distribution*Controls

Robert D. Anderson
4403 Zion Rd.
Garland ,TX 75043

voice: 972-814-7324
email: robert.d.andersonrib@cgocal.net
contact: Mark Swanson-Project Manager
voice: 817-556-0986
email: mark@mepdesignrtx.com

DRAWING IS DIAGRAMMATIC, AND AS SUCH ADJUSTMENTS FOR UNKNOWN FIELD CONDITIONS MAY BE REQUIRED. THIS DRAWING WAS PREPARED FOR SPECIFIC USE ON THE DATE AND SITE INDICATED HEREON. ANY REUSE OF THIS DRAWING FOR OTHER PURPOSES OR ON OTHER PROJECT REQUIRES THE SERVICES OF THE ENGINEER. DRAWINGS ARE SUBJECT TO COPYRIGHT AND MAY NOT BE REPRODUCED, DISTRIBUTED, PUBLISHED OR LISTED IN ANY WAY WITHOUT THE EXPRESS WRITTEN CONSENT OF ROBERT D. ANDERSON, P.E.

STATE OF TEXAS
ROBERT D. ANDERSON
44987
05/12/25
Firm No. F-5324

PREPARED FOR: McDonald's USA, LLC
© 2024 McDonald's USA, LLC
These plans and specifications are the confidential and proprietary property of McDonald's USA, LLC, and shall not be copied or reproduced without written authorization. The contract documents were prepared for use on this specific site in conjunction with the issue date cited on these drawings. Any reuse of these documents at other locations or on these drawings for reference or example on another project, requires the services of properly licensed architects and engineers. Reproduction of the contract documents for reuse on another project is not authorized.

DRAWN BY MES | STD ISSUE DATE 2024 | REVIEWED BY JAW | DATE ISSUED 10/11/2024

TITLE: 2024 STANDARD BUILDING – BB20
4584-WOOD/WOOD
DESCRIPTION: WOOD BEARING WALLS WITH HARDIE SIDING, WOOD ROOF TRUSS FRAMING, EIFS/BATTEN/METAL/HARDIE SIDING EXTERIOR FINISHES
SITE ID: 042-3591
SITE ADDRESS: NWC OF FM 460 & FM 740, FORNEY TEXAS

JAWA 24-0151

SHEET NO. E2.0
LIGHTING PLAN

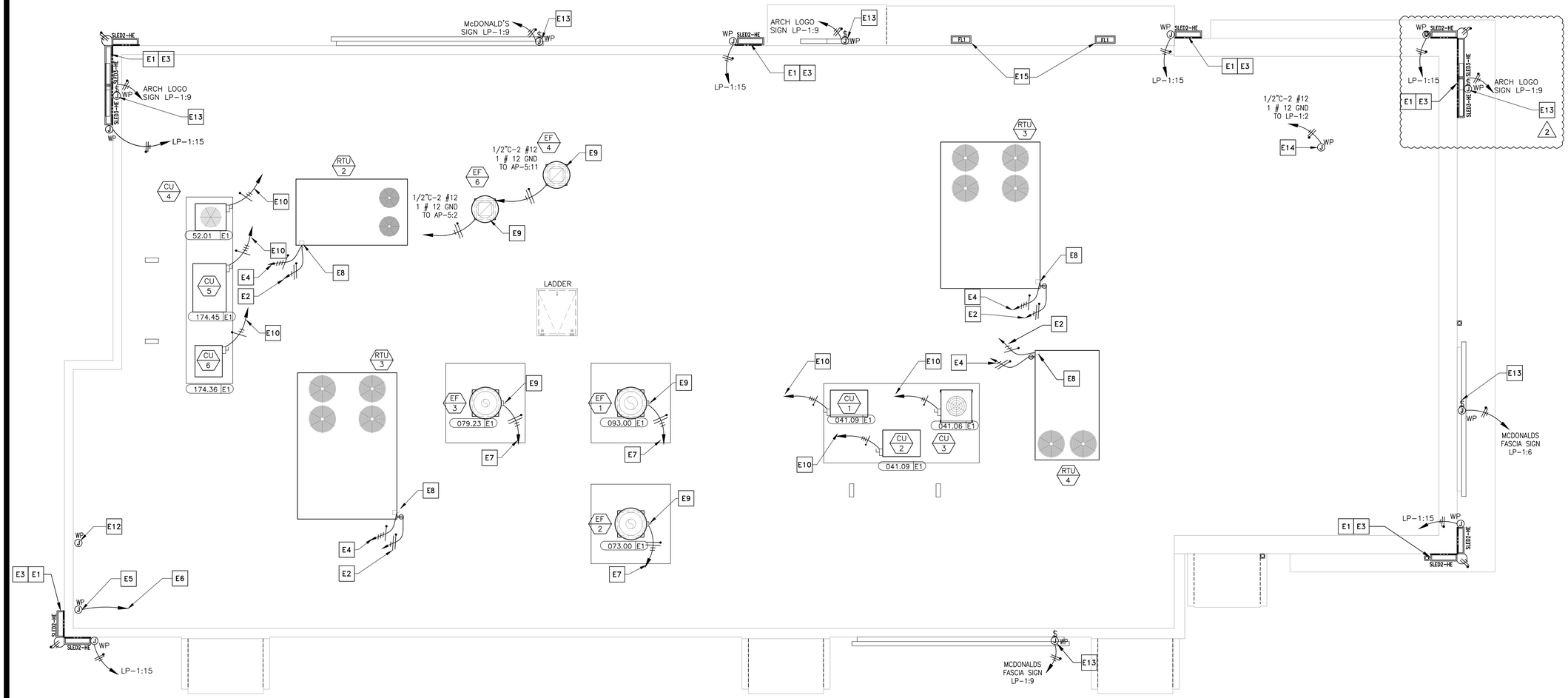

KEYED NOTES

- **E1** EVERY LINEAR RUN OF SLED FIXTURES REQUIRES A DEDICATED WHIP KIT PROVIDED WITH FIXTURE. CONTRACTOR TO FIELD VERIFY FIXTURE MOUNTING HEIGHT, LOCATION, QUANTITY, FIXTURE LENGTHS, AND ALL ELECTRICAL CONNECTION REQUIREMENTS WITH SECURITY LIGHTING PRIOR TO ORDERING AND INSTALLATION (TYPICAL).
- **E2** WEATHER PROOF RECEPTACLES WITH GFCI PROTECTION ARE PROVIDED AND MOUNTED WITHIN MOTOR HOUSING LOCATIONS PER NEC ARTICLE 210.63. CIRCUIT SHALL EMANATE FROM PANEL AP-5,CCT.#13.(TYPICAL).
- **E3** SMOOTH BRACING IS REQUIRED FOR LED FIXTURE INSTALLATION UNDER COPING/FLASHING.(TYPICAL)
- **E4** REFER TO SHEET E4.0 FOR CONDUIT AND WIRE SIZE.(TYPICAL)
- **E5** E.C SHALL PROVIDE A WEATHER-PROOF J-BOX ON INSIDE FACE OF PARAPET, MOUNTED 6" BELOW TOP OF PARAPET FOR LIGHTING CONTROL PANEL PHOTOCELL. (PHOTOCELL FURNISHED BY OTHERS AND INSTALLED BY EC). REFER TO LIGHTING CONTROL DETAILS ON E4.1
- **E6** TO LIGHTING ENCLOSURE W/ TIMER. COORDINATE WITH LIGHTING CONTROL DETAILS ON SHEET E4.1
- **E7** COOKING EQUIPMENT EXHAUST FANS. SEE SHEET E3.0 FOR ELECTRICAL REQUIREMENTS. SEE SHEET E3.2 FOR EXHAUST FAN INTERLOCK WIRING DIAGRAMS. (TYPICAL)
- **E8** PROVIDE NEMA 3R DISCONNECT WITH CURRENT LIMITING FUSES TO COMPLY WITH NEC 110 AND 440. ELECTRICAL CONTRACTOR SHALL STUB UP THRU RACEWAY IN CURB TO ELIMINATE CONDUIT PENETRATION OF ROOFING. (TYPICAL)
- **E9** EXTERNAL NEMA 3R MOUNTED ON SIDE OF FAN BY MANUFACTURER. ELECTRICAL CONTRACTOR SHALL STUB-UP THRU ROOF AND PROVIDE FLEXIBLE WEATHERPROOF CONDUIT FROM ROOF PENETRATION TO DISCONNECT (TYPICAL).
- **E10** REMOTE CONDENSING UNITS. SEE SHEET E3.0 FOR WIRING AND CIRCUITRY REQUIREMENTS.
- **E11** CANOPY LIGHT. LP-1:11 EC SHALL VERIFY EXACT SPECIFICATIONS AND LOCATION WITH MANUFACTURER. VERIFY EXACT INFEED REQUIREMENTS IN THE FIELD. SEE NOTE L5 ON SHEET E3.1. (TYPICAL)
- **E12** E.C. SHALL PROVIDE A WEATHER-PROOF JUNCTION BOX WITH ¾"C STUB DOWN TO CEILING SPACE WITH BUSHING FOR ROOF-TOP CAMERA OR SATELLITE. VERIFY EXACT LOCATION(S) WITH MCD AREA CONSTRUCTION MANAGER PRIOR TO INSTALLATION.
- **E13** E.C. SHALL PROVIDE A JUNCTION BOX FOR ARCH LOGO / McDONALD'S FASCIA / PLAY-PLACE SIGN. SEE NOTE L1 ON SHEET E3.1. COORDINATE EXACT LOCATION IN FIELD WITH ACM. ALL SIGNS PROVIDED WITH INTEGRAL DISCONNECT SWITCH FROM MANUFACTURER.(TYPICAL)
- **E14** E.C. SHALL PROVIDE A JUNCTION BOX FOR ROOF-TOP FLAG POLE LIGHTING. VERIFY LOCATION(S) WITH MCD PROJECT MANAGER PRIOR TO INSTALLATION.
- **E15** FLOOD LIGHT MOUNTED ABOVE CANOPY. LP-1:11 EC SHALL VERIFY EXACT SPECIFICATIONS AND LOCATION WITH ARCHITECTURAL ELEVATIONS. VERIFY EXACT INFEED REQUIREMENTS IN THE FIELD. SEE FLOOD LIGHT DETAIL ON SHEET E3.1. (TYPICAL)

DRAWING NOTES

1. SEE DRAWING M-4.0 FOR GENERAL MECHANICAL NOTES.
2. SEE DRAWINGS M-3.0 AND M-4.1 FOR MECHANICAL EQUIPMENT SCHEDULES AND DETAILS.
3. SEE DRAWING M-4.0 FOR MECHANICAL LEGEND.
4. SEE DRAWING K-2.1 FOR REMOTE CONDENSER AND MAC UNIT INFORMATION.
5. SEE ELECTRICAL DRAWINGS FOR ADDITIONAL INFORMATION.

LED GENERAL NOTES

1. PLACE LED FIXTURE AT DESIRED LOCATION AND ATTACH POWER SUPPLY AND MOUNTING BRACKET AS RECOMMENDED BY MANUFACTURER.
2. EC SHALL CONNECT NEW FIXTURES TO A 120V CIRCUIT AND MAKE ALL ELECTRICAL CONNECTIONS AS REQUIRED FOR A COMPLETE OPERATING SYSTEM.
3. POWER SUPPLY SHALL ALWAYS BE INSTALLED TO THE LEFT SIDE OF FIXTURE WHEN FACING BRAND WALL.

LED FIXTURE SCHEDULE:

MARK	SYMBOL	DESCRIPTION	DIFFUSER	LAMPS WATTS	LAMPS TYPE	BALLAST	MOUNTING	MANUFACTURER AND CATALOG NUMBER
SLED2-HE		DOWN ONLY ACCENT LIGHTING (SEE PLAN)	TEMPERED GLASS	1-10W PER FIXTURE	LED	–	SURFACE	SECURITY LIGHTING: SLED-HE-24-DO-U-IO CUSTOM BUILT FOR EXTERIOR ACCENT CHANNELS.
SLED3-HE		DOWN ONLY ACCENT LIGHTING (SEE PLAN)	TEMPERED GLASS	1-14W PER FIXTURE	LED	–	SURFACE	SECURITY LIGHTING: SLED-HE-36-DO-U-IO CUSTOM BUILT FOR EXTERIOR ACCENT CHANNELS.
SLED4-HE		DOWN ONLY ACCENT LIGHTING (SEE PLAN)	TEMPERED GLASS	1-19W PER FIXTURE	LED	–	SURFACE	SECURITY LIGHTING: SLED-HE-48-DO-U-IO CUSTOM BUILT FOR EXTERIOR ACCENT CHANNELS.
FL1		UP ONLY ACCENT LIGHTING (SEE PLAN)	TEMPERED GLASS	1-16W PER FIXTURE	LED	–	SURFACE	SECURITY LIGHTING: EL218-W-5-8L-5K-UV-IO-JWIO

REV	DATE	DESCRIPTION	BY
1	04/08/2025	COUNTY COMMENTS, MCD QC COMMENTS, & UTILITY COORDINATION	
2	05/09/2025	PLAYPLACE ADDITION	

Robert D. Anderson ,Inc.
MEP Engineering & Design Consultants
HVAC*Illumination*Plumbing*Power Distribution*Controls

Robert D. Anderson
4403 Zion Rd.
Garland ,TX 75043

voice: 972-814-7324
email: robert.d.anderson@sbcglobal.net
contact: Mark Swanson-Project Manager
voice: 817-556-0986
email: mark@mepdesignrts.com

DRAWING IS DIAGRAMMATIC, AND AS SUCH ADJUSTMENTS FOR UNKNOWN FIELD CONDITIONS MAY BE REQUIRED. THIS DRAWING WAS PREPARED FOR SPECIFIC USE ON THE DATE AND SITE INDICATED HEREON. ANY REUSE OF THIS DRAWING FOR OTHER PURPOSES OR ON OTHER PROJECT REQUIRES THE SERVICES OF THE ENGINEER. DRAWINGS ARE SUBJECT TO COPYRIGHT AND MAY NOT BE REPRODUCED, DISTRIBUTED, PUBLISHED OR USED IN ANY WAY WITHOUT THE EXPRESS WRITTEN CONSENT OF ROBERT D. ANDERSON, P.E.

STATE OF TEXAS
ROBERT D. ANDERSON
44987
LICENSED
05/12/25
Firm No. F-5324

@ 2024 McDonald's USA, LLC

PREPARED FOR:
McDonald's USA, LLC

These drawings and specifications are the confidential and proprietary property of McDonald's USA, LLC and shall not be copied or reproduced without written authorization. The contract documents were prepared for use on this specific site. Construction with the issued date and are not suitable for use on other projects or at other locations. Use of these drawings for reference or example on another project requires the services of properly licensed architects and engineers. Reproduction of the contract documents for reuse on another project is not authorized.

DRAWN BY: MES
STD ISSUE DATE: 2024
REVIEWED BY: JAW
DATE ISSUED: 10/11/2024

TITLE: 2024 STANDARD BUILDING – BB20
4584-WOOD/WOOD
DESCRIPTION: WOOD BEARING WALLS WITH HARDIE SIDING
WOOD ROOF TRUSS FRAMING
EIFS/BATTEN/METAL/HARDIE SIDING EXTERIOR FINISHES
SITE ID: 042-3591
SITE ADDRESS: NWC OF FM 460 & FM 740, FORNEY TEXAS

SHEET NO.: JAWA 24-0151
E2.1
ELEC. ROOF PLAN

PB = Pullbox
JB = Junction Box
EC = Electrical Contractor
VIF = Verify in Field

ELECTRICAL SCHEDULE

TAG #	QTY	DESCRIPTION	VOLT/PH	FLA	BRK SIZE	COND/WIRE	PNL/CCT	RECEP TYPE	HGT AFF	REQUIREMENTS & REMARKS
00000 E1	1									
004.20E6	1	DIGITAL MERCHANDISER	120/1 ISOLATED	2.6	20A	1/2"C–2#12IG	CP:6	IG5262	6'–5"	–
004.23E1	1	DIGITAL MERCHANDISER – MEDIA PLAYER	120/1 ISOLATED	1.0	20A	1/2"C–2#12IG	CP:6	IG5262	6'–5"	USE SAME RECEPTACLE AS 4.20E6
004.23E2	1	DIGITAL MERCHANDISER – MEDIA PLAYER	DATA CABLE	–	–	–	–	JB	6'–5"	JB W/ 1" C. TO FULL HEIGHT WALL AND TO ABOVE CEILING W/BUSHINGS. FOR DATA CABLES. SUPPLY W/GROMMETED OPENING IN COVER PLATE
009.15E1	1	UTILITY CHASE – FFDT INTERIOR WALL	–	–	–	–	–	–	SEE RMKS	UTILITY CHASE AND RECEPTACLES PROVIDED BY K.E.S.
009.16E1	1	UTILITY CHASE – FFDT EXTERIOR WALL	–	–	–	–	–	–	SEE RMKS	UTILITY CHASE AND RECEPTACLES PROVIDED BY K.E.S.
020.01E1	2	AUTOMATED BEVERAGE SYSTEM 2.0	120/1	5.0	20A	1/2"C–2#12	AP–1:12, AP–2:24	5–20R	2'–0"	–
020.01E2	2	AUTOMATED BEVERAGE SYSTEM 2.0	120/1	14.9	20A	1/2"C–2#12	AP–1:6, AP–2:26	5–20R	3'–10"	FOR PRE–COOLER
021.01E3	3	COFFEE BREWER (THERMAL POTS)	120–208/1	15.5	20A	1/2"C–3#12	AP–1:(2,4)(14,16), AP–6:(11,13)	BY KES	SEE RMKS	EC TO EXTEND CIRCUIT TO L14–20R RECEPTACLE IN CHASE
023.10E1	1	ESPRESSO BREWER	208/1	21.6	30A	1/2"C–2#10	AP–1:(19,21)	BY KES	SEE RMKS	EC TO EXTEND CIRCUIT TO L6–30R RECEPTACLE IN CHASE
023.12E1	1	COFFEE CREAM DISPENSER	120/1	1.0	20A	1/2"C–2#12	AP–1:8	BY KES	SEE RMKS	EC TO EXTEND CIRCUIT TO 5–20R RECEPTACLE IN CHASE
023.14E1	1	SUGAR/SWEETENER DISPENSER	120/1	1.5	20A	1/2"C–2#12	AP–1:8	BY KES	SEE RMKS	EC TO EXTEND CIRCUIT TO 5–20R RECEPTACLE IN CHASE
024.02E1	1	JUICE DISPENSER	120/1	4.5	20A	1/2"C–2#12	AP–1:8	5–20R	SEE RMKS	EC TO EXTEND CIRCUIT TO 5–20R RECEPTACLE IN CHASE
025.07E1	1	INFUSION TEA BREWER – MIS	120–208/1	13.0	20A	1/2"C–3#12	AP–2:(32,34)	L14–20R	2'–3"	–
025.07E2	1	INFUSION TEA BREWER – MIS	–	–	–	–	–	JB	2'–3"	FOR WATER LINE TO ICED TEA BREWER IF CHASE IS NOT SPECIFIED. (SEE P1.6)
031.03E1	1	SODA SYSTEM PACKAGE – B.I.B. (RECIRCULATING– 3 TOWERS)	208/3	26.0	30A	3/4"C–3#10	AP–2:(37,39,41)	SEE RMKS	3'–0" SEE RMKS	EC SUPPLIES 30A–3P NF DISC SW MTD 9" BELOW CEILING PER NEC SECT. 404.8(A)
031.03E2	1	SODA SYSTEM PACKAGE – B.I.B. (RECIRCULATING– 3 TOWERS)	–	–	–	–	–	JB	4'–0"	FOR CONTROL WIRES FROM REMOTE CONDENSING UNIT
031.03E3	1	SODA SYSTEM PACKAGE – B.I.B. (RECIRCULATING– 3 TOWERS)	120/1	(2) 6.8	20A	1/2"C–2#12	AP–2:35	5–20R	6'–6"	FOR WATER BOOSTER SYSTEM AND OPTIONAL AIR COMPRESSOR
032.02E1	1	REVERSE OSMOSIS WATER FILTRATION SYSTEM – TANKLESS	120/1	4.0	20A	1/2"C–2#12 EA.	AP–2:23	5–20R	6'–0"	–
032.04E1	1	WATER FILTRATION SYSTEM	120/1	0.08	20A	1/2"C–2#12 EA.	AP–2:23	5–20R	6'–0"	–
037.03E1	2	CO2 SAFETY SYSTEM – DETECTOR	120/1	1.0	20A	1/2"C–2#12	AP–1:10	JB	SEE RMKS	PROVIDE LOCKOUT CB. SEE MECHANICAL DRAWINGS
037.03E2	2	CO2 SAFETY SYSTEM	–	–	–	–	–	JB	SEE RMKS	FOR LV WIRES. STUB 3/4"C. ABV. CLG. SEE MECHANICAL DRAWINGS
037.03E4	4	CO2 SAFETY SYSTEM – CO2 DETECTOR AV ALARM	–	–	–	–	–	JB	7'–0" MINIMUM	STUB 3/4"C. ABOVE CLG. FOR LV COND. TO 037.03E2. SEE MECHANICAL DRAWINGS
038.00E1	1	CLEAN IN PLACE PANEL	120/1	1.0	20A	1/2"C–2#12	AP–2:21	5–20R	5'–6"	–
039.10E1	1	ICE MACHINE – 1400 LB.	208/3	13.4	20A	1/2"C–3#12	AP–2:(1,3,5)	SEE RMKS	SEE RMKS	EC SUPPLIES 30A–3P NF DISC SW MTD9"BELOW CEILING PER NEC 404.8(A) EX.2 VERIFY W/ AHJ
039.10E2	1	ICE MACHINE – 1400 LB.	–	–	–	–	–	JB	4'–6" SEE RMKS	CONTROL WIRES TO REMOTE CONDENSER
039.15E1	2	ICE MACHINE – 1000 LB.	120/1	1.1	15A	1/2"C–2#12	AP–1:37,39	5–20R	SEE RMKS	MOUNT 9" BELOW CEILING – CIRCUIT BREAKERS SHALL BE HACR TYPE
039.15E2	2	ICE MACHINE – 1000 LB.	–	–	–	1/2"C	–	JB	SEE RMKS	MOUNT 9" BELOW CEILING – CONTROL WIRES TO REMOTE CONDENSER
041.06E1	1	ICE MACHINE REMOTE CONDENSER – 1400 LB.	208/1	1.0	20A SEE RMKS	1/2"C–3#12	AP–1:(26,28)	SEE RMKS	SEE RMKS	EC TO PROVIDE WP 30A–2P NF DISC AT UNIT ON ROOF – CIRCUIT BREAKERS SHALL BE HACR TYPE
041.09E1	2	ICE MACHINE REMOTE CONDENSER – 1000 LB.	208/3	11.1	15A SEE RMKS	1/2"C–3#12 SEE RMKS	AP–1:(32,34,36)(38,40,42)	SEE RMKS	SEE RMKS	EC TO PROVIDE WP 30A–3P NF DISC AT UNIT ON ROOF – CIRCUIT BREAKERS SHALL BE HACR TYPE
043.21E1	1	OPTIMIZED ORDER ASSEMBLY TABLE	120/1	5.4	20A	SEE RMKS	KES BREAKER PANEL	SEE RMKS	SEE RMKS	PLUGS INTO KES OUTLET CHASE FOR HLA
052.01E1	1	SODA SYSTEM PACKAGE REMOTE CONDENSER – 3–TOWER	208/1	2.5	20A SEE RMKS	SEE RMKS	SEE RMKS	SEE RMKS	SEE RMKS	EC TO PROVIDE 30A–2P DISC SW W/15A FUSE – POWERED BY 31.03 – LOCATION BY ACM
052.01E2	1	SODA SYSTEM PACKAGE REMOTE CONDENSER – 3–TOWER	–	–	–	–	–	–	SEE RMKS	CONTROL WIRES TO SODA SYSTEM – LOCATION BY ACM
061.00E1	1	FRY BAGGING STATION 36"	120/1	12.5	20A	1/2"C–2#12	AP–1:31	JB	4'–0"	–
065.30E1	1	3–VAT LOV FRYER – ELECTRIC – F/F/F	208/3	38.9 EA. VAT	(3) 50A	1"C–3#6 EA. VAT	AP–4:(13,15,17)(19,21,23)(25,27,29)	BY KES	SEE RMKS	PLUGS INTO RACEWAY RECEP WITH(1)L21–20P INTERLOCK PLUG &(3) 15–60P POWER PLUG BY KES
066.47E1	1	4–VAT LOV FRYER – ELECTRIC – S/S/S/S	208/3	38.9 EA. VAT	(4) 50A	1"C–3#6 EA. VAT	AP–3:(1,3,5)(7,9,11)(2,4,6)(8,10,12)	BY KES	SEE RMKS	PLUGS INTO RACEWAY RECEP WITH(1)L21–20P INTERLOCK PLUG &(4) 15–60P POWER PLUG BY KES
073.00E1	1	UNIVERSAL EXHAUST HOOD 3–VAT FRYER	120/1	12.5, 9.8	(2)20A–1P	1/2"C–2#12EA	AP–1:23,24	BY KES	SEE RMKS	EC TO CONN POWER TO RACEWAY FLA = 12.0 FRYER CONTROLS, 0.5 CAPTURE JET & 9.8 INDIVID. EXHAUST FAN INTERLOCK
079.23E1	1	UNIVERSAL EXHAUST HOOD FULL–CLAM/4–VAT FRYER	120/1	17.6, 13.8	(2)20A–1P	1/2"C–2#12EA	AP–1:29,41	BY KES	SEE RMKS	EC TO CONN POWER TO RACEWAY FLA=3.6 GRILL,13.0 FRYER CONTROLS, 1.0 CAPTURE JET & 13.8 INDIVID EXHAUST FAN INTERLOCK
079.26E2	2	VENTLESS HOOD COMBI OVEN	120/1	8.0	15A	1/2"C–2#12	AP–4:14,16	BY KES	SEE RMKS	EC TO EXTEND DEDICATED CIRCUIT TO 5–15R RECEPTACLE IN CHASE
085.05E1	1	FROZEN FRY DISPENSER	120/1	9.0	20A	1/2"C–2#12	AP–1:27	5–20R	4'–0"	–
091.02E1	1	WALL MOUNT FREEZER UNIT–SINGLE WIDE–HIGH CAPACITY	120/1	5.0	20A	1/2"C–2#12	AP–5:23	5–20R	7'–6"	–
093.00E1	1	UNIVERSAL EXHAUST HOOD FULL–CLAM GRILL	120/1	13.9	20A	1/2"C–2#12	AP–2:17	BY KES	SEE RMKS	EC TO CONN. POWER TO RACEWAY FLA = 3.6 GRILL CONTROLS, 0.5 CAPTURE JET & 9.8 INDIVID. EXHAUST FAN INTERLOCK
096.21E1	2	36" NEXT GEN 3–PLATEN CLAMSHELL GRILL – ELECTRIC	208/3	21.7, 43.3	(2)50A	1–1/2"C– 6#4	AP–3:(14,16,18)(20,22,24) AP–4:(1,3,5)(7,9,11)	BY KES	SEE RMKS	PLUGS IN RACEWAY RECEP WITH(1)L21–20P INTERLOCK& (2) 15–50P POWER PLUG EA GRILL
097.08E1	1	MEAT FREEZER – DOUBLE WIDE – HIGH CAPACITY – RIGHT HAND	120/1	7.0	20A	1/2"C–2#12	AP–2:19	5–15R	SEE RMKS	UNIT PLUGS INTO RACEWAY RECEPTACLE
114.00E1	1	HUMIDIFIED HOLDING CABINET	208/1	9.1	20A	1/2"C–2#12	AP–5:(34,36)	SEE RMKS	5'–6"	PLUGS INTO OVERHEAD RECEPTACLE # 320C6W(B) PROVIDED BY KES – HEIGHT TO BOTTOM OF RECEPTCLE
116.23E4	2	UNIVERSAL HOLDING CABINET – HIGH DENSITY – 2–SIDED – PIN & SLEEVE	208/1	15.2	20A	1/2"C–2#12	AP–5:(4,6)(8,10)	BY KES	5'–6"	PLUGS INTO OVERHEAD RECEPTACLE # 320C6W(B) PROVIDED BY KES – HEIGHT TO BOTTOM OF RECEPTCLE
117.30E1	1	UHC TABLE COPL – 2 SIDED – 51"D x 34"W – PIN&SLEEVE	120/1	2.0	20A	1/2"C–2#12	AP–5:12	BY KES	5'–6"	PLUGS INTO OVERHEAD RECEPTACLE # 320C4W(Y) PROVIDED BY KES– HEIGHT TO BOTTOM OF RECEPTACLE
118.00E1	1	Q'ING OVEN – PIN & SLEEVE	208/1	15.4	20A	1/2"C–2#12	AP–2:(38,40)	SEE RMKS	5'–6"	PLUGS INTO OVERHEAD RECEPTACLE # 320C6W(B) PROVIDED BY KES– HEIGHT TO BOTTOM OF RECEPTACLE
118.03E1	2	Q'ING OVEN – PIN & SLEEVE	208/1	14.9	20A	1/2"C–2#12	AP–2:(18,20)(28,30)	SEE RMKS	5'–6"	PLUGS INTO OVERHEAD RECEPTACLE # 320C6W(B) PROVIDED BY KES– HEIGHT TO BOTTOM OF RECEPTACLE
122.27E1	1	NEXT GEN. UNIVERSAL RADIANT TOASTER –PIN & SLEEVE	208/1	25.2	30A	1/2"C–2#10	AP–5:(27,29)	SEE RMKS	5'–6"	PLUGS INTO OVERHEAD RECEPTACLE # 330C6W(B) PROVIDED BY KES– HEIGHT TO BOTTOM OF RECEPTACLE
122.28E2	1	NEXT GEN. UNIVERSAL CONTACT TOASTER –PIN & SLEEVE	208/1	25.2	30A	1/2"C–2#10	KES BREAKER PANEL	SEE RMKS	SEE RMKS	PLUGS INTO KES RACEWAY RECEPTACLE
123.36E1	1	ECU TABLE – COPL	208/1	4.9	15A	SEE RMKS	KES BREAKER PANEL	SEE RMKS	SEE RMKS	PLUGS INTO KES OUTLET CHASE.
123.37E1	1	BREAKER PANEL– 125 AMP – 1 PHASE – EQUIPMENT MOUNTED	120–208/1	SEE RMKS	125A	1–1/2C"–3#1	MDP:11	–		EC TO EXTEND AND CONNECT ELECTRICAL SERVICE. HARDWIRE TO KES BREAKER PANEL.
123.40E1	1	PREP TABLE – HD – 2–SIDED COPL – 38"D x 83 1/2" – PIN & SLEEVE W/ REF.	120/1	10.0	20A	SEE RMKS	KES BREAKER PANEL	SEE RMKS	SEE RMKS	PLUGS INTO KES OUTLET CHASE.
125.00E2	2	RAPID BUN STEAMER	208/1	14.3	30A	1/2"C–2#10	KES BREAKER PANEL	SEE RMKS	SEE RMKS	PLUGS INTO KES RACEWAY RECEPTACLE
130.00E3	2	COMBI OVEN	208/3	15.1	30A	1/2"C–3#10	AP–4:(2,4,6)(8,10,12)	BY KES	SEE RMKS	EC TO EXTEND CIRCUIT TO L430R9 RECEPTACLE IN CHASE
152.08E1	1	WAREWASHER – HIGH TEMP	208/3	26.9 EA.	(2)30A	1/2"C–3#10	AP–5(31,33,35)(37,39,41)	SEE RMKS	SEE RMKS	EC TO SUPPLY 30A–3P NF DISC SW HANDLE HGT. MTD @ 6'–7" AFF FOR EA. CCT PER NEC 404.8(A). LABEL "WAREWASHER (# OF 2)"
163.02E1	4	REMOTE ANSUL PULL	–	–	–	–	–	JB	SEE DETAILS	4" OCTAGONAL, RACO #165 OR EQUAL MUST BE USED.
171.01E1	1	WALK–IN COOLER / FREEZER FLOORLESS	120/1	10.0	20A	1/2"C–2#12	AP–2:14,16	JB	FLUSH ON CLG	JB FOR LIGHTS &]DOOR HEATER– UNSWITCHED LIGHT TO BE IN BOTH COOLER & FREEZER,EC TO CONNECT POWER
171.01E2	1	WALK–IN COOLER / FREEZER FLOORLESS	–	–	–	–	–	–	VIF	EC TO FURNISH & INSTALL CONDUIT,WIRE & LIGHT FIXTURES& OTHER DEVICES INSIDE COOLER/FREEZER BOX
174.36E1	1	REMOTE CONDENSING UNIT	208/1	15.0	20A	1/2"C–2#12	AP–5:(38,40)	JB	VIF	EC TO PROVIDE 30A–2P NF DISC AT UNIT ON ROOF. CIRCUIT BREAKERS TO BE HARC RATED.
174.36E2	1	REMOTE CONDENSING UNIT	LOW VOLT WIRES	–	–	–	–	–	VIF	–
174.45E1	1	REMOTE CONDENSING UNIT	208/3	24.7	40A	3/4"C–3#8	MDP:15	JB	VIF	EC TO PROVIDE 60A–3P NF DISC AT UNIT ON ROOF. CIRCUIT BREAKERS TO BE HARC RATED.
174.45E2	1	REMOTE CONDENSING UNIT	LOW VOLT WIRES	–	–	–	–	–	VIF	–
175.18E1	1	COOLER EVAPORATOR	208/1	1.0	20A	1/2"C–2#12	AP–6:(9,11)	JB	FLUSH ON CLG	–
175.18E2	1	COOLER EVAPORATOR	LOW VOLT WIRES	–	–	–	–	–	FLUSH ON CLG	L V WIRES CONN UNIT TO EVAPS & SHALL BE ROUTED SEPARATELY FROM POWER CONDUCTORS
176.27E1	1	FREEZER EVAPORATOR	208/1	20.3	30A SEE RMKS	1/2"C–2#10	AP–6:(13,15)	JB	FLUSH ON CLG	–
176.27E2	1	FREEZER EVAPORATOR	LOW VOLT WIRES	–	–	–	–	–	FLUSH ON CLG	L V WIRES CONN UNIT TO EVAPS & SHALL BE ROUTED SEPARATELY FROM POWER CONDUCTORS
177.03E2	1	REACH–IN REFRIGERATOR–SINGLE WIDE	120/1	2.7	20A	1/2"C–2#12	AP–2:31	SEE RMKS	SEE RMKS	EC TO EXTEND CIRCUIT TO 5–20R RECEPTACLE IN CHASE
178.05E1	3	REACH–IN FREEZER–SINGLE WIDE	120/1	11.0	20A	1/2"C–2#12	AP–1:25,30,35	5–20R	7'–6"	–
181.13E1	1	REFRIGERATOR – SPECIALTY COFFEE– 27" WIDE	120/1	3.9	20A	1/2"C–2#12	AP–2:22	BY KES	SEE RMKS	EC TO EXTEND CIRCUIT TO 5–20R RECEPTACLE IN CHASE
181.14E1	1	REFRIGERATOR – WORK TOP – 48" WIDE	120/1	5.0	20A	1/2"C–2#12	AP–2:8	5–20R	2'–0"	–
183.00E1	2	REFRIGERATOR/FREEZER – 2 DRAWER BASE – 30" W X 33" H	120/1	5.0	20A	1/2"C–2#12	AP–5:1	5–20R	2'–0"	–
183.02E2	2	REFRIGERATOR/FREEZER – 2 DRAWER BASE – 30" W X 30" H	120/1	5.0	20A	1/2"C–2#12	AP–5:5,7	BY KES	SEE RMKS	EC TO EXTEND CIRCUIT TO 5–20R RECEPTACLE IN CHASE
183.02E3	1	REFRIGERATOR/FREEZER – 2 DRAWER BASE – 30" W X 30" H	120/1	5.0	20A	1/2"C–2#12	AP–5:9	BY KES	5'–6"	PLUGS INTO OVERHEAD RECEPTACLE # 320C4W(Y) PROVIDED BY KES– HEIGHT TO BOTTOM OF RECEPTACLE
196.06E1	1	SAFE – STANDARD BLDG.	120/1	1.0	20A	1/2"C–2#12	AP–1:7	5–20R	2'–0"	PROVIDE LOCKOUT TYPE CB
197.01E1	1	HAND WASH TIMER	120/1	0.1	20A	1/2"C–2#12	AP–1:33	5–20R	4'–6"	–
203.01E1	1	HEAT TREAT COMBINATION SHAKE/SUNDAE MACHINE	208/3	13.0	30A	3/4"C–3#8	AP–1:(18,20,22)	4x4x4 PB	1'–0"	RECEP #A460R9 BY KES, IF TAYLOR C602 IS ORDERED USE A 40A BRKR & #6 CONDUCTORS –EC MAKES FINAL CONN

PB = Pullbox
JB = Junction Box
EC = Electrical Contractor
VIF = Verify in Field

ELECTRICAL SCHEDULE

TAG #	QTY	DESCRIPTION	VOLT/PH	FLA	BRK SIZE	COND/WIRE	PNL/CCT	RECEP TYPE	HGT AFF	REQUIREMENTS & REMARKS
205.08E1	1	BIC MACHINE	120/1	8.6	20A	1/2"C–2#12	AP–2:29	BY KES	SEE RMKS	EC TO EXTEND DEDICATED CIRCUIT TO 5–20R RECEPTACLE IN CHASE
205.09E2	1	FROZEN BEVERAGE DISPENSER	208/1	20.0	30A	1/2"C–2#10	AP–5:(17,19)	SEE RMKS	SEE RMKS	RECEP L6–30R IN CHASE BY KES, EC MAKES FINAL CONN
207.01E2	1	BLENDER – MCFLURRY – RAIL MOUNT	120/1	1.2	20A	1/2"C–2#12	AP–2:7	5–20R	4'–0"	
210.00E10	1	CASH RECYCLER	120/1 ISOLATED	4.4	20A	1/2"C–2#12IG	CP:27	(2) IG5262	SEE RMKS	PROVIDE RECEP. IN COUNTER–MOUNTED RACEWAY
210.00E4	1	CASH RECYCLER	120/1 ISOLATED	4.4	20A	1/2"C–2#12IG	CP:24	(2) IG5262	2'–10"	–
211.00E6	1	DELIVERY TABLETS	120/1	3.0	20A	1/2"C–2#12	AP–5:21	(2) 5–20R	5'–6"	–
214.02E1	1	82" 44U STATIONARY RACK	120/1 ISOLATED	5.0	20A	1/2"C–2#12IG	CP:11	IG4700	7'–6"	FOR SWITCHES, HUBS AND RADIUS
214.02E3	1	82" 44U STATIONARY RACK	120/1 ISOLATED	10.0	20A	1/2"C–2#12IG	CP:15	IG4700	3'–0"	FOR CASHLESS DEVICE UPS
214.02E4	1	82" 44U STATIONARY RACK	120/1 ISOLATED	12.0	20A	1/2"C–2#12IG	CP:17	IG4700	3'–0"	FOR POS SYSTEM UPS AND ORB CONTROLLER
214.02E5	1	82" 44U STATIONARY RACK	DATA CABLE	–	–	–	–	8x6x4 PB	7'–6"	EXTEND (2) 2 1/2" CONDUIT ABOVE CLG. W/BUSHING FOR DATA CABLES
214.02E6	1	82" 44U STATIONARY RACK	120/1 ISOLATED	14.0	30A	1/2"C–2#10IG	CP:12	L5–30R IG	3'–0"	FOR POS SYSTEM UPS
215.00E12	1	POS REGISTER – FRONT COUNTER	120/1 ISOLATED	3.0 EA.	–	3/4"C–2#12IG	CP:19	IG4700	SEE RMKS	PROVIDE IG RECEP. IN COUNTER–MOUNTED RACEWAY
215.00E3	1	POS REGISTER – FRONT COUNTER	DATA CABLE	–	–	–	–	4x4x4 PB	10"	EXTEND 2" CONDUIT TO ABOVE CEILING FOR POS DATA CABLES
215.02E1	1	POS REGISTER – 2 WINDOW D/T	120/1 ISOLATED	3.0 EA.	SEE RMKS	1/2"C–2#12IG	SEE REMARKS	(2)IG4700	2'–5"	IN ORDER BOOTH, CONNECT TO CP:7 – IF INCLUDED IN PRESENTERS BOOTH, CONNECT TO CP:8
215.02E10	2	POS REGISTER – 2 WINDOW D/T	120/1 ISOLATED	3.0 EA.	20A	1/2"C–2#12IG	CP:1	BY KES	SEE RMKS	EC TO EXTEND CIRCUIT TO IG4700 RECEPTACLE IN CHASE
215.02E12	1	POS REGISTER – 2 WINDOW D/T	–	–	–	–	–	18x12x4 PB	10"	REFER TO D/T LOW VOLTAGE CONDUIT DIAGRAM FOR CONDUITS UNDER SLAB AND EXTEND (2) 2 1/2"C. TO ABOVE CLG.
215.02E13	2	POS REGISTER – 2 WINDOW D/T	–	–	–	–	–	4x4x4 PB	10"	EXTEND 1 1/2"C. UNDER SLAB TO 217.11E1 AND 2 1/2" C. TO ABOVE CEILING FOR POS DATA CABLES
215.04E1	2	POS – KVS MONITOR	120/1 ISOLATED	1.5 EA.	20A	1/2"C–2#12IG	CP:8	IG4700	FLUSH ON CLG	–
215.04E4	2	POS – KVS MONITOR	120/1 ISOLATED	1.5	20A	1/2"C–2#12IG	CP:26	SEE RMKS	SEE RMKS	EC TO EXTEND CIRCUIT TO IG4700 RECEPTACLE IN OEP
215.04E5	2	POS – KVS MONITOR	120/1 ISOLATED	1.5 EA.	20A	1/2"C–2#12IG	CP:3	SEE RMKS	SEE RMKS	EC TO EXTEND CIRCUIT TO IG4700 RECEPTACLE IN CHASE
215.04E7	3	POS – KVS MONITOR	120/1 ISOLATED	1.5 EA.	20A	1/2"C–2#12IG	CP:23	IG4700	5'–6"	–
215.04E8	1	POS – KVS MONITOR	DATA CABLE	–	–	–	–	4x4x4 PB	4'–0"	EXTEND 2" CONDUIT ABOVE CEILING. CABLE FURNISHED AND INSTALLED BY POS SYSTEM SUPPLIER
215.07E1	1	POS REGISTER – DELIVERY	120/1 ISOLATED	3.0	20A	1/2"C–2#12IG	CP:23	IG4700	3'–6"	
215.07E3	1	POS REGISTER – DELIVERY	DATA CABLE	–	–	–	–	4x4x4 PB	3'–6"	EXTEND 2" CONDUIT TO ABOVE CEILING FOR POS DATA CABLES
216.00E13	2	POS – VIDEO MONITOR	120/1 ISOLATED	1.5 EA.	20A	1/2"C–2#12IG	CP:3	SEE RMKS	SEE RMKS	EC TO EXTEND CIRCUIT TO IG4700 RECEPTACLE IN CHASE
216.00E14	4	POS – VIDEO MONITOR	120/1 ISOLATED	1.5 EA.	20A	1/2"C–2#12IG	CP:9	IG4700	SEE RMKS	EXTEND CONDUIT DOWN GRILL HOOD SHROUD AND PROVIDE IG4700 RECEPTACLE
216.00E7	3	POS – VIDEO MONITOR	120/1 ISOLATED	1.5 EA.	20A	1/2"C–2#12IG	CP:1	BY KES	SEE RMKS	EC TO EXTEND CIRCUIT TO IG4700 RECEPTACLE IN CHASE
217.03E4	1	POS – COD OPTICAL ISOLATOR	120/1 ISOLATED	1.0	20A	1/2"C–2#12IG	CP:14	IG5262	7'–6"	–
217.10E1	2	REMOTE DETECTOR LOOP	–	–	–	–	–	–	–	1 1/2"CONDUIT–CONN TO PULLBOX#215.03E5,215.01E4, OR 215.02E12 PER DRIVE–THRU CONFIG–SEE SITE PLAN
217.11E1	2	DETECTOR LOOP	–	–	–	–	–	–	–	1 1/2"CONDUIT–CONN TO PULLBOX#215.02E5,215.02E13, OR 215.02E4 PER DRIVE–THRU CONFIG–SEE SITE PLAN
217.13E1	1	MERGE POINT MONITOR (DOUBLE DRIVE THRU)	120/1	2.0	20A	1/2"C–2#12	AP–1:11	5–20R	3'–6"	DO NOT POWER FROM POS CIRCUIT
217.13E2	2	MERGE POINT MONITOR (DOUBLE DRIVE THRU)	120/1	2.0	20A	1/2"C–2#12	AP–1:11	BY KES	SEE RMKS	EC TO EXTEND CIRCUIT TO 5–20R RECEPTACLE IN CHASE
217.14E1	1	POS– VIDEO MONITOR (DOUBLE DRIVE THRU)	120/1 ISOLATED	1.5	SEE RMKS	1/2"C–2#12IG	CP:7	IG4700	3'–6"	–
217.18E1	3	HAND HELD ORDER TAKER AND MANAGEMENT OF SHIFT EQUIPMENT	120/1	5.0	20A	1/2"C–2#12	AP–1:15	5–20R	4'–6"	–
217.19E2	1	WIRELESS HEADSET BASE STATION	120/1 ISOLATED	1.9	20a	1/2"C–2#12IG	CP:1	IG4700	4'–6"	
217.19E3	1	WIRELESS HEADSET BASE STATION	DATA CABLE	–	–	–	–	4x4x4 PB	5'–0"	
217.24E1	1	DANGER POINT MONITOR (DOUBLE DRIVE–THRU)	120/1	2.0	20A	1/2"C–2#12	AP–1:11	5–20R	8'–0"	DO NOT POWER FROM POS CIRCUIT
217.26E1	1	ZOOM TIMER	120/1 ISOLATED	6.0	20A	1/2"C–2#12IG	CP:10	(2) IG4700	7'–6"	–
217.26E2	1	ZOOM TIMER	DATA CABLE	–	–	–	–	JB	7'–6"	JB W/ 1–1/2" C. TO TERMINATE ABOVE CEILING W/BUSHINGS. FOR DATA CABLES. SUPPLY W/ GROMMETED OPENING IN COVER PLATE
219.00E10	1	POS – RECEIPT PRINTER	120/1 ISOLATED	0.7	20A	3/4"C–2#12IG	SEE RMKS	IG4700	SEE RMKS	PROVIDE IG RECEP. IN COUNTER–MOUNTED RACEWAY, POWER FROM SAME CIRCUIT AS 215.00E12
219.00E3	1	POS – RECEIPT PRINTER/CASHLESS	120/1 ISOLATED	0.7	20A	1/2"C–2#12IG	CP:4	IG4700	2'–0"	–
219.00E7	2	POS – RECEIPT PRINTER	120/1 ISOLATED	0.7	20A	1/2"C–2#12IG	CP:3	BY KES	SEE RMKS	EC TO EXTEND IG CIRCUIT TO IG4700 RECEPTACLE IN KES OUTLET CHASE.
219.05E2	2	STICKY LABEL PRINTER	120/1 ISOLATED	0.7	20A	1/2"C–2#12IG	CP:1	BY KES	SEE RMKS	EC TO EXTEND IG CIRCUIT TO IG4700 RECEPTACLE IN CHASE
219.05E3	1	STICKY LABEL PRINTER	120/1 ISOLATED	0.7	20A	1/2"C–2#12IG	CP:3	IG4700	3'–2"	–
219.05E6	2	STICKY LABEL PRINTER	120/1 ISOLATED	0.7	20A	1/2"C–2#12IG	CP:3	IG4700	FLUSH ON CLG	–
219.06E1	1	LABELING SYSTEM	120/1 ISOLATED	2.0	20A	1/2"C–2#12IG	CP:8	IG5261	2'–0"	–
220.00E1	1	POS – COIN DISPENSER	120/1 ISOLATED	0.75	20A	1/2"C–2#12IG	CP:7	IG4700	2'–0"	–
221.09E1	1	O/O EQUIPMENT RACK	120/1 ISOLATED	4.0	20A	1/2"C–2#12IG	CP:31	IG5262	8'–0"	–
221.09E2	1	O/O EQUIPMENT RACK	DATA CABLE	–	–	2" C	–	4x4x4 PB	8'–0"	EXTEND 2" CONDUIT ABOVE CLG. W/ BUSHING FOR DATA CABLES
222.01E1	1	TIME CLOCK	120/1 ISOLATED	0.5	20A	1/2"C–2#12IG	CP:28	IG4700	4'–0"	–
222.01E2	1	TIME CLOCK	DATA CABLE	–	–	–	–	JB	4'–0"	EXTEND 1" CONDUIT ABOVE CEILING
223.07E1	1	WASHER	120/1	8.0	15A	1/2"C–2#12	AP–1:13	5–15R	3'–6"	–
225.03E3	2	OFFICE PACKAGE/DESK UNIT	120/1 ISOLATED	10.0	20A	1/2"C–2#12IG	CP:20,22	IG5262	4'–6"	FOR MONITOR, PRINTER AND THIN CLIENT
~~225.03E4~~	~~1~~	~~OFFICE PACKAGE/DESK UNIT~~	~~DATA CABLE~~	~~–~~	~~–~~	~~–~~	~~–~~	~~4x4x4 PB~~	~~4'–6"~~	~~EXTEND 2 1/2" CONDUIT ABOVE CLG. W/BUSHING FOR DATA CABLE~~
226.00E1	1	CREW MICROWAVE	120/1	10.0	20A	1/2"C–2#12	AP–1:5	5–20R	1'–6"	EC TO PROVIDE SIMPLEX ON DEDICATED CIRCUIT FOR CREW MICROWAVE
~~237.00

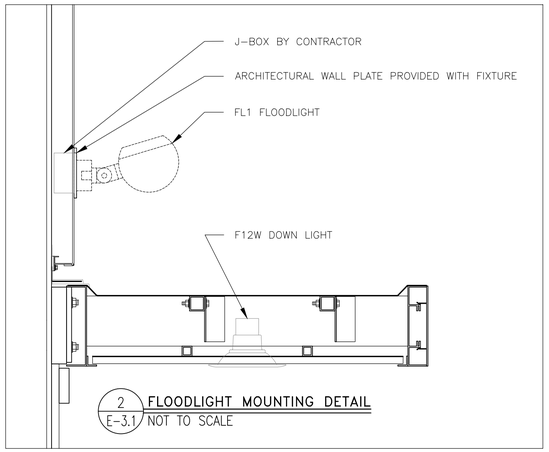

2 FLOODLIGHT MOUNTING DETAIL
E-3.1 NOT TO SCALE

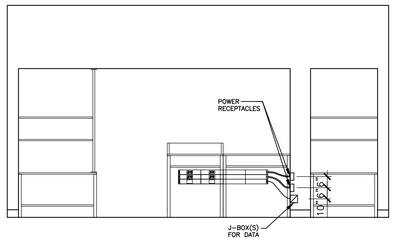

SYMBOL	CATALOG #	DESCRIPTION
	HBLAU570R & IG4700	RECEPTACLE COVERPLATE WITH ORANGE, TWIST LOCK, ISOLATED GROUND DUPLEX RECEPTACLE
	HBLAU570R & 5-20R FOR BAKED GOODS AND IG5262 FOR CASH	RECEPTACLE COVERPLATE WITH STRAIGHT BLADE RECEPTACLE
	HBLAU57LPB	COMMUNICATIONS COVERPLATE
	HBLAU7620B02M290	2" SECTION OF RACEWAY. INCLUDES COUPLERS
	HBLAU7620B03M290	3" SECTION OF RACEWAY. INCLUDES COUPLERS
	HBLAU7610B2M2	SERVICE ENTRANCE FITTING & BUSHING FOR DATA CABLES
	HBLAU7610B	BLANK END FITTING
N/A	HBLAU5701	COUPLER (INCLUDED WITH RACEWAY SECTION)
N/A	HBLAU5709	GROUND ADAPTER

NOTES:
1. REFER TO SERVICE POD MANUFACTURER INSTRUCTIONS FOR EXACT PLACEMENT OF RACEWAY
2. RACEWAY AND RECEPTACLES TO BE PROVIDED WITH SERVICE POD, INSTALLED BY CONTRACTOR.
3. DETAIL SHOWN IS A TYPICAL CONFIGURATION ONLY. SITE SPECIFICS MIGHT CAUSE DEVIATIONS.
4. PART NUMBERS SHOWN REFLECT HUBBELL, SOME SUPPIERS MAY USE WIREMOLE EQUIVALENT.

1 SERVICE POD RACEWAY DETAIL
E-3.1 NOT TO SCALE

REMOTE ANSUL PULL STATION FOR REFERENCE

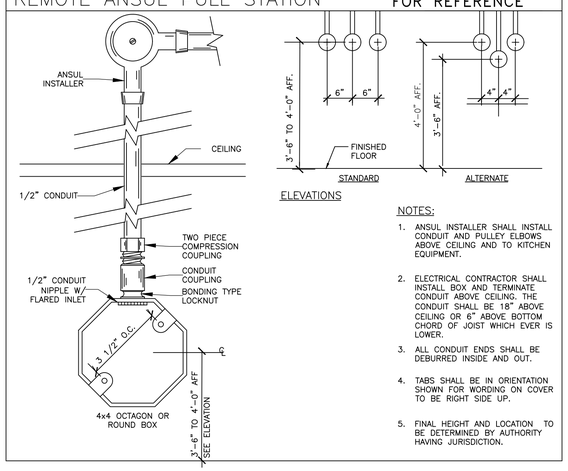

NOTES:
1. ANSUL INSTALLER SHALL INSTALL CONDUIT AND PULLEY ELBOWS ABOVE CEILING AND TO KITCHEN EQUIPMENT.
2. ELECTRICAL CONTRACTOR SHALL INSTALL BOX AND TERMINATE CONDUIT ABOVE CEILING. THE CONDUIT SHALL BE 18" ABOVE CEILING OR 6" ABOVE BOTTOM CHORD OF JOIST WHICH EVER IS LOWER.
3. ALL CONDUIT ENDS SHALL BE DEBURRED INSIDE AND OUT.
4. TABS SHALL BE IN ORIENTATION SHOWN FOR WORDING ON COVER TO BE RIGHT SIDE UP.
5. FINAL HEIGHT AND LOCATION TO BE DETERMINED BY AUTHORITY HAVING JURISDICTION.

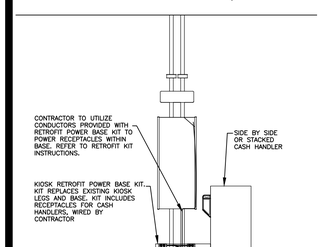

NOTES:
1. THIS EXAMPLE IS FOR A SIDE BY SIDE CASH HANDLER THAT DOES NOT HAVE A GC WALL BEHIND IT AND IS NEXT TO A KIOSK. IT IS ALSO INTENDED FOR ALL STACKED CASH HANDLERS.
2. EACH SIDE BY SIDE CASH HANDLER UTILIZES 3 PLUGS AND ADDS 4.4 AMPS OF LOAD TO THE KIOSK CIRCUIT.
3. EACH STACKED CASH HANDLER UTILIZED 2 PLUGS AND ADDS 3.6 AMPS OF LOAD TO THE KIOSK CIRCUIT.
4. ONLY 1 SIDE BY SIDE CAN BE CONNECTED TO A KIOSK, HOWEVER TWO STACKED UNITS CAN BE CONNECTED. REFER TO DECOR PLANS FOR EXACT CONFIGURATIONS.

5 TYP. CASH HANDLER POWER DETAIL
E-3.1 NOT TO SCALE

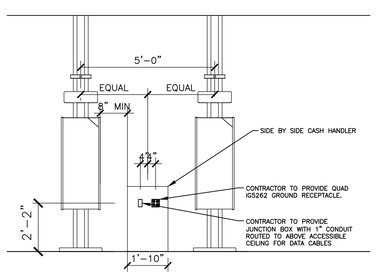

NOTES:
1. THIS EXAMPLE IS FOR A SIDE BY SIDE CASH HANDLER WITH THE REAR OF THE UNIT FACING A FULL HEIGHT GC BUILT WALL.
2. EACH SIDE BY SIDE CASH HANDLER UTILIZES 3 PLUGS AND ADDS 4.4 AMPS OF LOAD.

4 CASH HANDLER POWER DETAIL W/REAR TO WALL
E-3.1 NOT TO SCALE

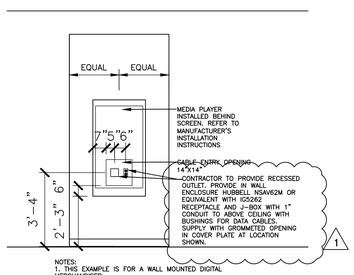

NOTES:
1. THIS EXAMPLE IS FOR A WALL MOUNTED DIGITAL MERCHANDISER.

3 DIGITAL MERCHANDISER POWER DETAIL
E-3.1 NOT TO SCALE

GENERAL ELECTRICAL NOTES:

INSTALLATION METHODS:

M1. ALL ELECTRICAL MATERIAL USED ON THIS PROJECT SHALL BE "UL" LISTED AND LABELED.

M2. ALL DIMENSIONS SHOWN ARE TAKEN FROM FACE OF GYP BOARD/PLYWOOD. THE EC SHALL MAKE NECESSARY DIMENSIONAL ALLOWANCES. ALL DIMENSIONS SHOWN ARE TO CENTER LINE OF OUTLET BOX AND/OR RECEPTACLE UNLESS NOTED OTHERWISE.

M3. ALL J-BOXES, DCOs, AND OTHER ELECTRICAL DEVICES SHOWN SHALL BE RECESSED INTO A WALL, FLOOR OR CEILING UNLESS SPECIFICALLY NOTED OTHERWISE.

M4. ALL RECEPTACLES (EXCEPT SPECIFIED HUBBELL PIN & SLEEVE TYPES) SHALL BE FURNISHED BY THE EC. THE RECEPTACLES INCLUDING PIN AND SLEEVE TYPE SHALL BE INSTALLED BY THE EC.

M5. EC SHALL PROVIDE STAINLESS STEEL COVER PLATES ON ALL RECEPTACLES AND J-BOXES. ADDITIONALLY, EC SHALL PROVIDE ORANGE NYLON COVER PLATES MARKED "COMPUTER ONLY" ON ALL ISOLATED GROUND/DEDICATED CIRCUIT RECEPTACLES. PURCHASE PJ8CO (ONE DUPLEX) OR PJ82CO (TWO DUPLEX) FROM HUBBELL.

M6. ROUGH-INS FOR OPTIONAL EQUIPMENT ARE SHOWN ON THESE SHEETS. EC SHALL VERIFY WITH McDONALD'S PROJECT MANAGER WHICH OPTIONAL EQUIPMENT IS TO BE INCLUDED AND INSTALL OPTIONAL ROUGH-INS AS REQUIRED. PRICING FOR OPTIONAL ROUGH-INS SHALL BE INCLUDED IN BID AND CALLED OUT AS OPTIONAL.

M7. EC SHALL COORDINATE WITH KITCHEN EQUIPMENT SUPPLIER, MECHANICAL CONTRACTOR AND GC FOR FINAL LOCATIONS AND CONNECTION REQUIREMENTS OF ALL EQUIPMENT PRIOR TO INSTALLATION OF ANY CONDUIT AND/OR STUB-UP LOCATIONS.

M8. CEILING MOUNTED ECONOMY OEP BOX IS FURNISHED BY McDONALD'S, AND INSTALLED BY THE GC. CORD AND PLUG SET FURNISHED BY KES AND INSTALLED BY THE EC.

M9. FOR GRILLS, FRYERS, AND ANSUL SYSTEMS, EC SHALL EXTEND CONDUIT AND CONDUCTORS DOWN CHASE OR WALL TO TERMINAL BLOCK MOUNTED ON EQUIPMENT AND MAKE FINAL CONNECTIONS TO TERMINAL BLOCKS.

M10. ALL HOLES IN THE FRONT COUNTER FOR THE POS CORDS AND CABLES SHALL BE LOCATED BY OWNER AND DRILLED BY GC.

M11. ALL ELECTRICAL CONDUCTORS SHALL BE CONNECTED TO RECEPTACLES USING ONLY THE TERMINAL SCREWS. RECEPTACLE BACK WIRE/QUICK CONNECTIONS SHALL NOT BE USED. HUBBELL EDGE CONNECT IS APPROVED ALTERNATIVE.

M12. EC SHALL PROVIDE 20BV HEAT TRACE ON THE FREEZER EVAPORATOR CONDENSATE DRAIN LINE. HEAT TRACE SHALL OPERATE CONTINUOUSLY. EC SHALL WIRE HEAT TRACE TO FREEZER EVAPORATOR POWER SUPPLY. A SEPARATE CIRCUIT FOR HEAT TRACE IS NOT REQUIRED. VERIFY HEAT TRACE REQUIREMENTS WITH EVAPORATOR MANUFACTURER

M13. POWER AND CONTROL CORDS ARE FURNISHED WITH KITCHEN APPLIANCES. THE EC SHALL CONNECT CORD SETS TO APPLIANCES AS REQUIRED.

M14. GC SHALL NOT INSTALL CEILING TILE IN AREAS OF THE BEVERAGE BAR REFRIGERATION LINES AND EQUIPMENT PENETRATION LOCATIONS UNTIL THE LINES HAVE BEEN INSTALLED. THE CEILING TILE INSTALLER SHALL RETURN AND INSTALL THE TILES AFTER THE REFRIGERATION LINES HAVE BEEN INSTALLED AND TESTED.

UTILITIES:

U1. INCOMING SERVICE SHALL BE 208Y/120V, 3 PHASE, 4 WIRE. ANY DEVIATIONS TO THIS SERVICE TYPE SHALL NOT BE PERMITTED UNLESS APPROVED IN WRITING BY McDONALD'S.

U2. THE EC SHALL ARRANGE WITH THE ELECTRIC, TELEPHONE, AND OTHER UTILITY COMPANIES FOR INCOMING SERVICE REQUIREMENTS AND SHALL INCLUDE ALL COSTS IN BASE BID.

U3. THE EC SHALL VERIFY EXACT METHODS AND REQUIREMENTS FOR ELECTRICAL SERVICE WITH LOCAL UTILITY COMPANY. CURRENT TRANSFORMERS SHALL BE INSTALLED OUTSIDE RESTAURANT, LOCATE INSIDE ONLY IF REQUIRED BY UTILITY COMPANY OR LOCAL AUTHORITIES.

U4. PROVIDE CONCRETE PAD IF TRANSFORMER IS LOCATED ON GRADE AND PROVIDE SECONDARY SERVICE FEEDER AND CONDUITS TO PANEL MDP AS PER LOCAL UTILITY REQUIREMENTS.

U5. THE EC/GC/ACM SHALL OBTAIN AVAILABLE SHORT CIRCUIT CURRENT FROM THE LOCAL UTILITY COMPANY. THE EC/GC/ACM SHALL ADVISE IN WRITING (FAX SUPPLIER THE UTILITY LETTER) THE AVAILABLE AMOUNT OF FAULT CURRENT. THE PANELBOARD SUPPLIER SHALL BE RESPONSIBLE TO VERIFY THAT THE ELECTRICAL EQUIPMENT SHIPPED HAS APPROPRIATE ELECTRICAL RATINGS WHICH ARE EQUAL TO OR GREATER THAN THE AVAILABLE AMOUNT OF FAULT CURRENT AT THE SITE.

U6. EC AND ACM OR OWNER/OPERATOR AND ACM SHALL COORDINATE WITH LOCAL PHONE COMPANY TO PROVIDE A 10 PAIR (OR MORE) COPPER TELEPHONE CABLE FROM THE TELEPHONE UTILITY EASEMENT TO THE RESTAURANT TELEPHONE DEMARCATION POINT. IF THE TELEPHONE PANEL/BOX IS LOCATED INSIDE THE RESTAURANT, EC SHALL PROVIDE (2) EMPTY 3/4" CONDUITS FROM THE TELEPHONE PANEL/BOX UP TO ABOVE THE CEILING FOR FUTURE TELEPHONE CABLE INSTALLATION. ADDITIONALLY, THE EC SHALL PROVIDE AN EMPTY 3/4" CONDUIT FROM THE TELEPHONE PANEL/BOX TO THE LOCATION OF THE FUTURE INTERNET SERVER (VERIFY LOCATION WITH PM). EC SHALL CONNECT, INSTALL AND INCORPORATE ALL OTHER REQUIREMENTS NECESSARY FOR COMPLETE AND OPERATIONAL TELEPHONE SYSTEM(S) FOR THIS SITE. THE REMAINING UNUSED TELEPHONE CONDUCTOR PAIRS SHALL BE CAPPED AND LEFT IN PLACE FOR FUTURE USE. THE TELEPHONE PANEL/BOX SHALL BE GROUNDED AS SHOWN IN THE "BUILDING ELECTRICAL GROUNDING DETAIL."

U7. EC SHALL PROVIDE A 4" SCHEDULE 40/80 PVC CONDUIT THAT IS SUITABLE FOR DIRECT BURIAL FROM BUILDING TO UTILITY EASEMENT/ROW IN UTILITY CABLING/CONDUIT TRENCH PROVIDED BY GC. CONDUIT SHALL RUN FROM INCOMING TELCOM LOCATION AT BUILDING TO TELECOM PEDESTAL LOCATION IN UTILITY EASEMENT/ROW. VERIFY EXACT LOCATIONS IN FIELD WITH AREA CONSTRUCTION MANAGER AND TELECOM UTILITY PROVIDER PRIOR TO INSTALLATION.

INSTALLATION NOTES:

1. IF TELCOM CONDUIT IS TERMINATED WITHIN BUILDING, PVC SHALL TRANSITION TO HWG/RMC TYPE CONDUIT PRIOR TO RISING ABOVE FINISHED SLAB.
2. PROVIDE THERMOPLASTIC BUSHINGS AT BOTH ENDS OF CONDUIT FOR CABLING PROTECTION.
3. IF 90 DEGREE BENDS ARE REQUIRED, CONTRACTOR SHALL PROVIDE WIDE SWEEPING BENDS TO PREVENT BENDING/DAMAGE TO CABLE
4. ALL COMMUNICATIONS CABLING SHALL BE PULLED VIA THIS CONDUIT.
5. INSTALL A MINIMUM OF 6 PULL WIRES IN CONDUIT TO ALLOW FOR THE INSTALLATION OF FUTURE CABLING. USE NON-DEGRADING POLYPROPYLENE OR MONOFILAMENT PLASTIC LINE OR #12 AWGT SOLID COPPER CONDUCTORS WITH NOT LESS THAN 200 LBF TENSILE STRENGTH. PROVIDE AT LEAST 12 INCHES OF SLACK AT EACH END OF PULL WIRE.
6. AFTER INSTALLATION OF COMMUNICATIONS CABLING AND PULLSTRINGS/WIRES, CONTRACTOR SHALL SEAL BOTH ENDS OF CONDUIT TO PREVENT INTRUSION FROM WEATHER, RODENTS, DEBRIS, ETC. SEAL SHALL BE OF TYPE TO ALLOW FOR REMOVAL FOR INSTALLATION OF FUTURE CABLING

CONDUIT AND WIRE:

W1. THE FOLLOWING WIRING METHODS SHALL NOT BE USED: NON-METALLIC SHEATHED CABLE (ROMEX, NM, NMC, & NMS), ARMORED CABLE TYPE AC (BX), ELECTRICAL NON-METALLIC TUBING, TYPE ENT (SMURF-TUBE).

W2. CONDUIT RUNS MAY BE COMBINED EXCEPT WHERE ISOLATED GROUNDS ARE USED. IG CIRCUITS SHALL BE RUN IN SEPARATE CONDUITS. ALL HOME RUNS SHALL BE SIZED BASED ON DERATED CONDUCTOR AMPACITIES AND INCREASE CONDUIT AND WIRE SIZE AS REQUIRED BY NEC SECTION 310 REQUIREMENTS.

W3. CONDUIT SHALL HAVE A MAXIMUM OF 4 BENDS WITHOUT A JUNCTION BOX TO PREVENT DAMAGE TO CABLE DURING PULLING. THE EC SHALL PIGTAIL #12 PULL WIRE AT EACH END FOR INSTALLER TO PULL CABLE. ALL LOW VOLTAGE CONDUIT STUB-UPS SHALL BE PROVIDED WITH A BUSHING.

W4. MINIMUM WIRE SIZE SHALL BE #12 AWG COPPER UNLESS NOTED OTHERWISE. MINIMUM CONDUIT SIZE SHALL BE 1/2" UNLESS NOTED OTHERWISE. WIRES INSTALLED UNDERGROUND OR OUTDOORS SHALL BE THW.

W5. CONDUCTORS #10 AWG AND SMALLER SHALL BE SOLID COPPER. CONDUCTORS #8 AND LARGER SHALL BE STRANDED COPPER. ALUMINUM CONDUCTORS SHALL NOT BE UTILIZED FOR FEEDER OR BRANCH CIRCUIT DISTRIBUTION.

W6. RACEWAYS SHALL BE ANY OF THE FOLLOWING MATERIALS, INSTALLED IN ACCORDANCE WITH ALL APPLICABLE CODES:

OUTDOORS: (FOR SPECIFIC APPLICATIONS AND APPROPRIATE FITTINGS, SEE TABLE W6)

1. EXPOSED: RMC, IMC.
2. CONCEALED: RMC, IMC.
3. BELOW GRADE, SINGLE RUN: RNC, RMC.
4. BELOW GRADE, GROUPED: RNC, RMC.
5. CONNECTION TO VIBRATING EQUIPMENT (INCLUDING TRANSFORMERS AND HYDRAULIC, PNEUMATIC, ELECTRIC SOLENOID, OR MOTOR-DRIVEN EQUIPMENT): LFMC.
6. BOXES AND ENCLOSURES: NEMA 250, TYPE 3R OR 4.

INDOORS: (FOR SPECIFIC APPLICATIONS AND APPROPRIATE FITTINGS, SEE TABLE W6)

1. EXPOSED: EMT, IMC.
2. CONCEALED: EMT, IMC.

(CONTINUED ON TOP)

3. CONNECTION TO VIBRATING EQUIPMENT (INCLUDING TRANSFORMERS AND HYDRAULIC, PNEUMATIC, ELECTRIC SOLENOID, OR MOTOR-DRIVEN EQUIPMENT): FMC; EXCEPT USE LFMC IN DAMP OR WET LOCATIONS.
4. DAMP OR WET LOCATIONS: RIGID STEEL CONDUIT.
5. BOXES AND ENCLOSURES: NEMA 250, TYPE 1, EXCEPT AS FOLLOWS: A. DAMP, WET OR KITCHEN LOCATIONS: NEMA 250, TYPE 4, STAINLESS STEEL.

TABLE W6:

LOCATION	208V.	480V.	LOW ENERGY*
EXPOSED			
INDOORS	< 1" EMT COMPRESS. FTGS >1.25" IMC THREADED FTGS	IMC THREADED FTGS	EMT COMPR. FTGS
OUTDOORS	RMC OR IMC THREADED FTGS	RMC OR IMC THREADED FTGS	RMC OR IMC THREADED FTGS
CONCEALED			
WALLS	<2" EMT SET SCREW FTGS >2.5" IMC THREADED FTGS	<2" EMT SET SCREW. FTGS >2.5" IMC THREADED FTGS	EMT 1/2"- 2" SET SCREW FTGS 2.5" - 4" COMPR. FTGS
AIR HANDLING CEILING/SPACE	<2" EMT COMPR. FTGS >2.5" IMC THREADED. FTGS	2" EMT COMPR. FTGS < >2.5" IMC THREADED. FTGS	EMT COMPR. FTGS
NON AIR HANDLING CEILING/SPACE	<2" EMT SET SCREW FTGS >2.5" IMC THREADED. FTGS	<2" EMT COMPR. FTGS >2.5" IMC THREADED. FTGS	EMT 1/2" - 2" SET SCREW FTGS 2.5"- 4" COMPR. FTGS
BELOW GRADE			
INTERIOR	IMC THREADED FTGS OR SCHEDULE 40 OR 80 PVC	IMC THREADED FTGS	IMC THREADED FTGS SCHEDULE 40 OR 80 PVC
EXTERIOR	SCHEDULE 40 OR 80 PVC OR RMC THREADED FTGS	SCHEDULE 40 OR 80 PVC OR RMC THREADED FTGS	SCHEDULE 40 OR 80 PVC OR RMC THREADED FTGS

W7. ALL CONDUITS PENETRATING THE FREEZER/COOLER BOX SHALL BE SEALED IN COMPLIANCE NEC SECTION 300 AND THE FREEZER/COOLER BOX MANUFACTURERS REQUIREMENTS.

W8. PROVIDE THREE (3) 3/4" EMPTY CONDUITS FROM PANEL LP-1 UP TO THE CEILING SPACE AND CAP FOR FUTURE USE.

GROUNDING:

G1. ALL BRANCH AND FEEDER CIRCUITS SHALL BE GROUNDED BY TWO METHODS. THE FIRST METHOD SHALL INCLUDE AN INSULATED COPPER EQUIPMENT GROUNDING CONDUCTOR CONTAINED WITHIN THE SAME CONDUIT AS THE PHASE CIRCUIT CONDUCTORS AND SIZED PER NEC SECTION 250 REQUIREMENTS. THIS INSULATED EQUIPMENT GROUNDING CONDUCTOR SHALL HAVE ONE END PROPERLY TERMINATED AT THE EQUIPMENT GROUND BUS IN THE CORRESPONDING CIRCUIT BREAKER PANEL, AND THE OTHER END TERMINATED AT THE GROUNDING CONTACT OF A GROUNDING RECEPTACLE AND TO THE JUNCTION BOX OR TO AN EQUIPMENT CABINET, AS APPLICABLE. THE SECOND METHOD PROVIDES EQUIPMENT GROUNDING VIA METALLIC CONDUIT THAT IS CONNECTED AND TERMINATED IN FITTINGS LISTED FOR GROUNDING PER NEC SECTION 250 REQUIREMENTS. BOTH GROUNDING METHODS ARE REQUIRED IN A MCDONALD'S RESTAURANT. ISOLATED GROUND SHALL BE INSTALLED WHERE INDICATED ON PLAN AND AS SHOWN IN POS ISOLATED GROUND/DEDICATED CIRCUIT DETAIL ON SHEET E4.2.

G2. THE BUILDING GROUNDING SYSTEM SHALL COMPLY WITH NEC ARTICLE 250, MCDONALD'S SPECIFICATIONS, AND SHEET E4.2. CAUTION: IT IS A SAFETY HAZARD AND AN NEC VIOLATION TO HAVE ANY NEUTRAL TO GROUND CONNECTIONS BEYOND THE MAIN ELECTRICAL DISCONNECT MEANS. MCDONALD'S GROUNDING STANDARDS PURPOSELY EXCEED THOSE GIVEN BY THE NEC. THE EC SHALL PROVIDE A BUILDING GROUNDING SYSTEM MEETING NEC SECTION 250 REQUIREMENTS AS WELL AS MCDONALD'S STANDARDS.

G3. EC SHALL REFER TO "POS ISOLATED GROUND/DEDICATED CIRCUIT DETAIL, SHEET E4.2, FOR REQUIRED WIRING REQUIREMENTS OF COMPUTER PANEL CP.

G4. METAL RACEWAYS CONTAINING A GROUNDING ELECTRODE CONDUCTOR SHALL BE BONDED AT BOTH ENDS AS REQUIRED BY NEC SECTION 250 REQUIREMENTS.

TEMPERATURE CONTROLS:

T1. REMOTE TEMPERATURE SENSORS: EC SHALL PROVIDE 1/2" CONDUIT FROM JUNCTION BOX ABOVE CEILING DOWN TO SENSOR MOUNTED AT 4'-0" TO 4'-6" AFF.

T2. SEE DETAIL ON SHEET M3.0. FOR SENSOR MOUNTING DETAIL. LOCATION OF WALL MOUNTED TEMPERATURE SENSORS ARE SHOWN ON SHEET M1.2 AND E2.0.

T3. WHEN WIRING FOR PROGRAMMABLE THERMOSTATS AND REMOTE SENSORS IS NOT IN A CONDUIT, THE WIRING SHALL BE RUN TO THE UNDERSIDE OF THE ROOF DECK. NONE OF THE WIRING SHALL BE ROUTED OVER FLUORESCENT BALLASTS, POWER BOXES OR IN A CONDUIT WITH LINE VOLTAGE WIRING AS ELECTRICAL INTERFERENCE (NOISE) WILL CAUSE ERRATIC CONTROL OPERATION. ALL THERMOSTATS SHALL BE MOUNTED 4'-0" AFF.

FLAT PANEL TELEVISIONS:

TV1. EC SHALL PROVIDE A DUPLEX RECEPTACLE AND A LOW VOLTAGE BROADBAND CONNECTION FOR THE INSTALLATION OF FLAT PANEL TELEVISIONS. COORDINATE EXACT LOCATIONS WITH DECOR COMPANY. FOR BROADBAND CONNECTION, EC SHALL PROVIDE A 4 X 4 BOX WITH A 3/4" CONDUIT STUB-UP WITH A BUSHING INTO ACCESSIBLE CEILING SPACE.

ELECTRICAL PANELS:

E1. THE EC SHALL BE RESPONSIBLE FOR BALANCING THE LOADS ON ALL PANELS.

E2. THE EC SHALL PROVIDE ELECTRICAL SERVICE TO THE EQUIPMENT MOUNTED BREAKER PANEL. SEE ELECTRICAL ROUGH-IN PLAN AND SCHEDULE FOR ALL REQUIREMENTS.

E3. THE EC SHALL BE RESPONSIBLE FOR THE PROPER IDENTIFICATION AND LABELING OF ALL CIRCUIT BREAKERS. EACH PANEL SHALL BE PROVIDED WITH AN ACCURATE TYPEWRITTEN CIRCUIT DIRECTORY AT THE CONCLUSION OF THE PROJECT AND PRIOR TO RESTAURANT OPENING.

SECURITY AND DRIVE-THRU CAMERAS:

S1. EC TO PROVIDE ELECTRICAL POWER AND COMMUNICATION CONDUITS FOR BUILDING MOUNTED SECURITY AND DRIVE THRU CAMERAS. COORDINATE FINAL LOCATIONS WITH SECURITY AND DRIVE THRU CAMERA INSTALLERS.

LIGHTING:

L1. PROVIDE A WEATHERPROOF JUNCTION BOX IN PARAPET FOR FASCIA SIGN. FINAL CONNECTION BY OTHERS.

L2. COORDINATE THE LOCATION OF JUNCTION BOX (IN THE WALL) WITH THE OPENING IN TRELLIS (FOR THE LIGHT FIXTURE WIRES). THE LOCATION OF THE JUNCTION BOX AND THE OPENING IN THE TRELLIS SHALL BE ALIGNED FOR THE LIGHT FIXTURE TO BE INSTALLED PROPERLY. COORDINATE INSTALLATION OF JUNCTION BOX AND ANY NECESSARY OPENINGS IN TRELLIS WITH GC AND TRELLIS/CANOPY MANUFACTURER. SEE LIGHT FIXTURE INSTALLATION INSTRUCTIONS FOR REQUIREMENTS REGARDING MOUNTING BRACKETS FOR USE IN C-CHANNEL TRELLISES.

L3. EC SHALL FIELD VERIFY THAT LIGHT FIXTURES DO NOT OBSTRUCT OR CONFLICT WITH THE WORK OF OTHER TRADES. IF A DISCREPANCY IS FOUND, THE EC SHALL IMMEDIATELY NOTIFY THE GC BEFORE THE THE INSTALLATION OF SUCH FIXTURE(S). EC SHALL COORDINATE LOCATIONS OF ALL LIGHT FIXTURES IN DINING AREA WITH FINAL SEATING AND DECOR PLANS.

L4. IF PC-POS CASH REGISTER SYSTEM IS INSTALLED, EC SHALL RELOCATE FIXTURES ABOVE FRONT COUNTER TO AVOID GLARE ON THE CASH REGISTER SCREENS. EC SHALL INSTALL CABLE WHIP TO FIXTURES SO THAT FIXTURE MAY BE RELOCATED FOUR FEET WITHOUT DISCONNECTING CABLE WHIP.

L5. EC SHALL COORDINATE LOCATION OF ALL EXTERIOR LIGHTS TO AVOID INTERFERENCE WITH ANY CORBELS, TRUSSES, BEAMS OR OTHER SPECIAL EXTERIOR TREATMENTS. INSTALL LIGHT FIXTURES WITH CORRECT ORIENTATION PER MANUFACTURER'S INSTRUCTIONS

L6. THE USE OF INTERLOCK TYPE "MC" CABLE IN LENGTHS OF 6 FEET OR LESS (WHERE PERMITTED BY LOCAL CODES) SHALL BE ALLOWED FOR WIRING TO INTERIOR LIGHTING FIXTURES. "ROMEX" OR "BX" SHALL NOT BE USED.

L7. EC SHALL VERIFY THAT NOT MORE THAN 3% VOLTAGE DROP EXISTS FROM THE LIGHTING PANEL TO ANY EXTERIOR LIGHTING FIXTURE OR SIGNAGE BALLAST.

L8. WHERE MCDONALD'S RESTAURANT HAS A PLAYPLACE, THE EC SHALL COORDINATE EXACT LOCATION OF PLAYPLACE LIGHTING WITH PLAYPLACE TOY VENDOR FOR MAXIMUM ILLUMINATION AND SAFETY PER THE FINAL LOCATION OF THE PLAYPLACE TOY. LIGHTING FIXTURES SHALL NOT BE MOUNTED TO THE TOY OR ANY PART OF THE TOY STRUCTURE.

L9. EC SHALL VERIFY ALL TAP SETTINGS FOR H.I.D. LIGHTING FIXTURES AND MAKE ANY NECESSARY CORRECTIONS PRIOR TO INSTALLATION.

REV	DATE	DESCRIPTION	BY
1	04/08/2025	COUNTY COMMENTS, McD QC COMMENTS, & UTILITY COORDINATION	

Robert D. Anderson ,Inc.
MEP Engineering & Design Consultants
HVAC*Illumination*Plumbing*Power Distribution*Controls

Robert D. Anderson
4403 Zion Rd.
Garland , TX 75043

voice: 972-814-7324
email: robert.d.anderson@sbcglobal.net
contact: Mark Swanson-Project Manager
voice: 817-556-0986
email: mark@mepdesignrx.com

DRAWING IS DIAGRAMMATIC, AND AS SUCH ADJUSTMENTS FOR UNKNOWN FIELD CONDITIONS MAY BE REQUIRED. THIS DRAWING WAS PREPARED FOR SPECIFIC USE ON THE DATE AND SITE INDICATED HEREON. USE OF THIS DRAWING FOR OTHER PURPOSES OR AT OTHER SITES OR PROJECT REQUIRES THE SERVICES OF THE ENGINEER. DRAWINGS ARE SUBJECT TO COPYRIGHT AND MAY NOT BE REPRODUCED, DISTRIBUTED, PUBLISHED OR USED IN ANY WAY WITHOUT THE EXPRESS WRITTEN CONSENT OF ROBERT D. ANDERSON, P.E.

STATE OF TEXAS
ROBERT D. ANDERSON
44987
LICENSED PROFESSIONAL ENGINEER
04/04/25
Firm No. F-5324

PREPARED FOR: McDonald's USA, LLC
@ 2024 McDonald's USA, LLC
These drawings and specifications are the confidential and proprietary property of McDonald's USA, LLC and shall not be copied or reproduced without written authorization. The contract documents were prepared for use on this specific site in connection with its issue date and are not suitable for reuse on another site or for other projects. Reuse of these drawings for reference or example on another project requires the services of properly licensed architects and/or engineers. Reproduction of the contract documents for use on another project is a violation of law.

DRAWN BY	MES
STD ISSUE DATE	2024
REVIEWED BY	JAW
DATE ISSUED	10/11/2024

TITLE: 2024 STANDARD BUILDING - BB20
4584-WOOD/WOOD

DESCRIPTION: WOOD BEARING WALLS WITH HARDIE SIDING
WOOD ROOF TRUSS FRAMING
EIFS/BATTEN/METAL/HARDIE SIDING EXTERIOR FINISHES

SITE ID: 042-3591
SITE ADDRESS: NWC OF FM 460 & FM 740, FORNEY TEXAS

JAWA 24-0151

SHEET NO. E3.1
NOTES & DETAILS

SEQUENCE OF OPERATION:

1. TURNING "ON" ANY PIECE OF COOKING EQUIPMENT UNDER A HOOD WILL TURN ON THE EXHAUST FAN AND ASSOCIATED RTU PROVIDING MAKEUP AIR FOR THAT HOOD.
2. TURNING "OFF" THE LAST PIECE OF COOKING EQUIPMENT UNDER A HOOD WILL TURN OFF THE EXHAUST FAN FOR THAT HOOD.
3. IF THE ANSUL SYSTEM SHOULD DISCHARGE WHILE THE COOKING EQUIPMENT AND EXHAUST FAN ARE OPERATING, THE COOKING EQUIPMENT WILL BE SHUT OFF, BUT THE EXHAUST FAN WILL CONTINUE TO RUN AND WILL FORCE THE ROOFTOP UNITS INTO A "SCHEDULED" MODE
4. THE ANSUL SYSTEM MUST BE RECHARGED AND MANUALLY RESET BEFORE THE COOKING EQUIPMENT WILL AGAIN BE ABLE TO OPERATE.
5. THE ON/OFF SWITCH ON THE EXHAUST FAN IS NORMALLY KEPT IN THE "ON" POSITION. IF IT IS TURNED OFF FOR SERVICE, THE COOKING EQUIPMENT WILL TURN OFF AND NOT BE ABLE TO OPERATE UNTIL THE EXHAUST FAN ON/OFF SWITCH IS AGAIN TURNED ON.

INTERLOCK DIAGRAM LEGEND

- ● TERMINAL BLOCK IN CHASE
- CTB – CHASE TERMINAL BLOCK. PROVIDED AND INSTALLED BY KITCHEN EQUIPMENT SUPPLIER
- ETB – EQUIPMENT TERMINAL BLOCK
- EFCR – EXHAUST FAN CONTROL RELAY. PROVIDED BY CONTRACTOR.
- IGR – INTERNAL GRILL RELAY PROVIDED WITHIN GARLAND GRILLS
- MS – ANSUL MICROSWITCH PROVIDED BY KITCHEN EQUIPMENT SUPPLIER
- >> CONTROL CORD PLUG & RECEPTACLE
- FIELD WIRING
- CONTROL CORD/INTERNAL WIRING
- FACTORY WIRING
- EQUIPMENT OR ENCLOSURE

COOKING EQUIPMENT EXHAUST FAN	MAKE UP PROVIDED BY
EF/1	RTU–3
EF/2	RTU–1
EF/3	RTU–2

NOTE

RTU # ASSOCIATED WITH EACH EXHAUST FAN BASED ON PROTOTYPICAL VALUES ONLY. VERIFY THAT EXHAUST FAN ACTIVATES THE CORRESPONDING RTU TO PROVIDE AN ADEQUATE AMOUNT OF MAKEUP AIR.

1 / E-3.2 TYPICAL MAKEUP AIR RTU EXHAUST FAN SCHEDULE
FOR REFERENCE ONLY

REVISED: 6/18

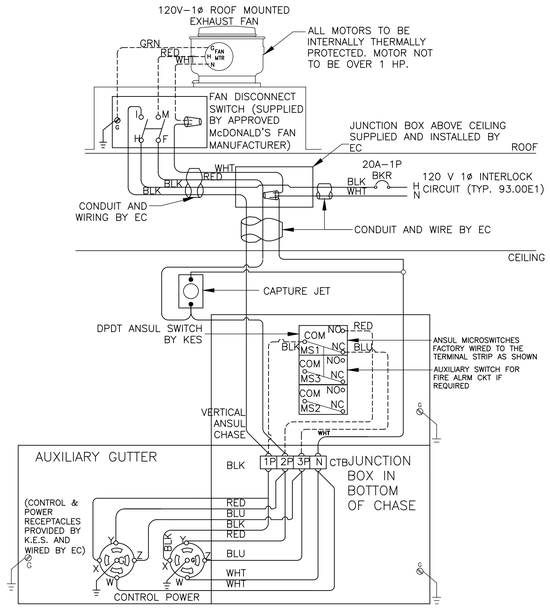

2 / E-3.2 INTERLOCK WIRING DIAGRAM FOR EXHAUST FAN AND COOKING EQUIPMENT
FOR REFERENCE ONLY

REVISED: 6/18

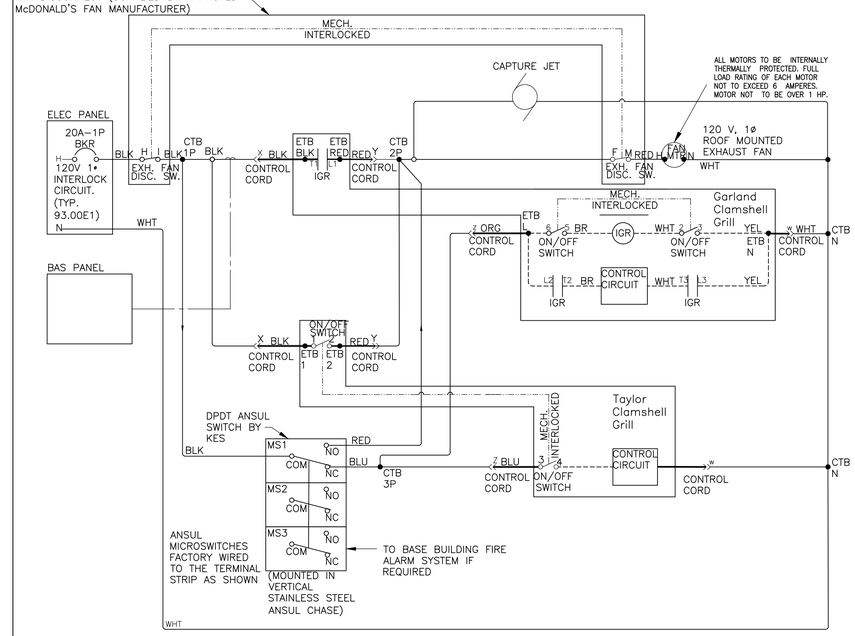

3 / E-3.2 INTERLOCK LADDER DIAGRAM
FOR REFERENCE ONLY

REVISED: 6/18

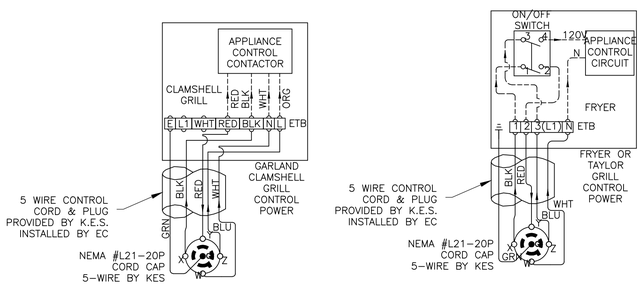

4 / E-3.2 CONTROL CORD CONNECTION
FOR REFERENCE ONLY

REVISED: 6/18

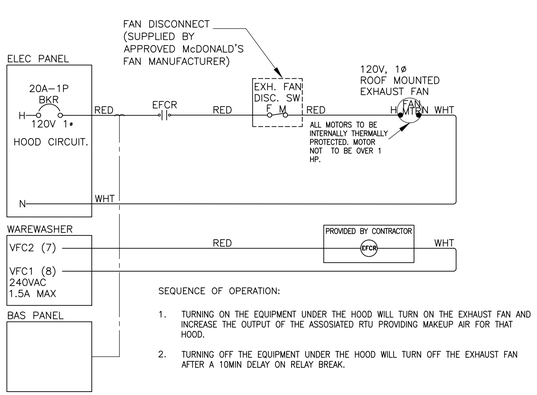

SEQUENCE OF OPERATION:

1. TURNING ON THE EQUIPMENT UNDER THE HOOD WILL TURN ON THE EXHAUST FAN AND INCREASE THE OUTPUT OF THE ASSOSIATED RTU PROVIDING MAKEUP AIR FOR THAT HOOD.
2. TURNING OFF THE EQUIPMENT UNDER THE HOOD WILL TURN OFF THE EXHAUST FAN AFTER A 10MIN DELAY ON RELAY BREAK.

7 / E-3.2 INTERLOCK LADDER DIAGRAM FOR EXHAUST FAN AND WAREWASHER
FOR REFERENCE ONLY

REVISED: 02/24

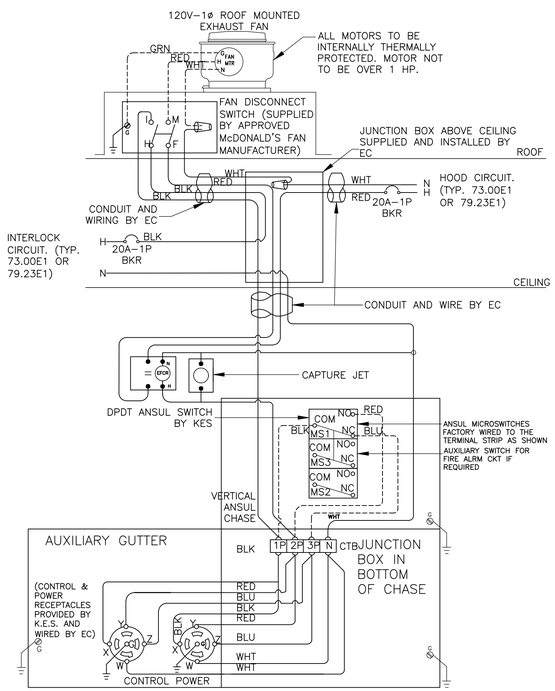

5 / E-3.2 INTERLOCK WIRING DIAGRAM FOR EXHAUST FAN AND COOKING EQUIPMENT
FOR REFERENCE ONLY

REVISED: 6/18

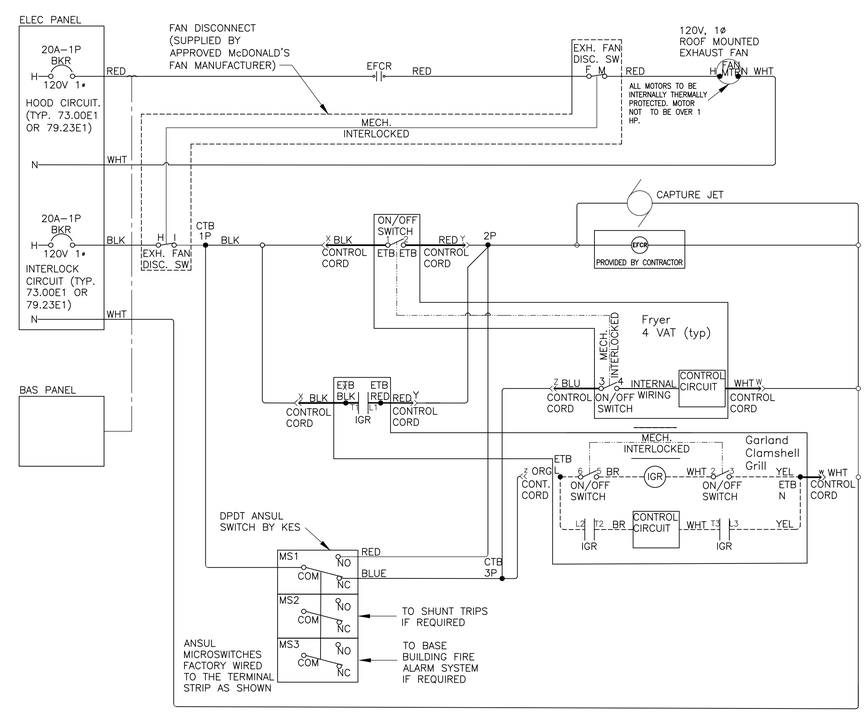

6 / E-3.2 INTERLOCK LADDER DIAGRAM
FOR REFERENCE ONLY

REVISED: 6/18

REV	DATE	DESCRIPTION	BY

Robert D. Anderson ,Inc.
MEP Engineering & Design Consultants
HVAC*Illumination*Plumbing*Power Distribution*Controls
Robert D. Anderson
4403 Zion Rd.
Garland , TX 75043
voice: 972-814-7324
email: robert.d.anderson@sbcglobal.net
contact: Mark Swanson-Project Manager
voice: 817-556-0986
email: mark@mepdesigntx.com

DRAWING IS DIAGRAMMATIC, AND AS SUCH ADJUSTMENTS FOR UNKNOWN FIELD CONDITIONS MAY BE REQUIRED. THIS DRAWING WAS PREPARED FOR SPECIFIC USE ON THE DATE AND SITE INDICATED HEREON. REUSE OF THIS DRAWING FOR OTHER PURPOSES OR ON OTHER SITES OR PROJECT REQUIRES THE SERVICES OF THE ENGINEER. DRAWINGS ARE SUBJECT TO COPYRIGHT AND MAY NOT BE REPRODUCED, DISTRIBUTED, PUBLISHED OR USED IN ANY WAY WITHOUT THE EXPRESS WRITTEN CONSENT OF ROBERT D. ANDERSON, P.E.

ROBERT D. ANDERSON 44987 STATE OF TEXAS
09/24/24
Firm No. F-5324

PREPARED FOR: McDonald's USA, LLC
© 2024 McDonald's USA, LLC
These drawings and specifications are the confidential and proprietary property of McDonald's USA, LLC and shall not be copied or reproduced without written authorization. The contract documents were prepared for use on this specific site in connection with its issue date and are not suitable for reuse on another project. Modification of these drawings for reference or example on another project requires the services of properly licensed architects and engineers. Reproduction of the contract documents for reuse on another project is not authorized.

DRAWN BY: MES
STD ISSUE DATE: 2024
REVIEWED BY: JAW
DATE ISSUED: 10/11/2024

TITLE: 2024 STANDARD BUILDING – BB20
4584–WOOD/WOOD

DESCRIPTION: WOOD BEARING WALLS WITH HARDIE SIDING
WOOD ROOF TRUSS FRAMING
EIFS/BATTEN/METAL/HARDIE SIDING EXTERIOR FINISHES

SITE ID: 042–3591
SITE ADDRESS: NWC OF FM 460 & FM 740, FORNEY TEXAS

JAWA 24–0151

SHEET NO. E3.2
INTERLOCK DIAGRAMS

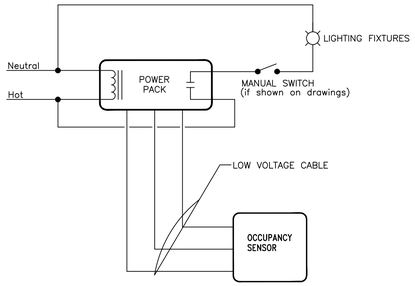

NOTES:

1. REFER TO LIGHTING PLAN FOR OCCUPANCY SENSOR LOCATIONS AND QUANTITIES.

1 / E-4.0 OCCUPANCY SENSOR CONTROL DETAIL
NOT TO SCALE

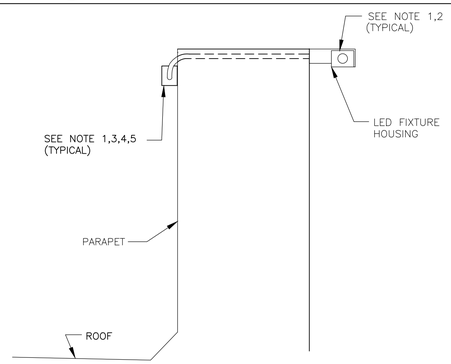

3 / E-4.0 BRAND WALL LIGHTING DETAIL
NOT TO SCALE

GENERAL NOTES

1. PLACE LED FIXTURE AT DESIRED LOCATION AND INSTALL FIXTURE FROM LEFT TO RIGHT WHEN FACING ARCADE AND ATTACH POWER SUPPLY AND MOUNTING BRACKET AS RECOMMENDED BY MANUFACTURER.
2. EC SHALL CONNECT NEW FIXTURES TO THE NEXT AVAILABLE SPARE 120V CIRCUIT AND MAKE ALL ELECTRICAL CONNECTIONS AS REQUIRED FOR A COMPLETE OPERATING SYSTEM.
3. POWER SUPPLY SHALL ALWAYS BE INSTALLED TO THE LEFT SIDE OF FIXTURE WHEN FACING ARCADE.
4. OVERALL FIXTURE RUN TO BE CENTERED ON OVERALL LENGTH OF WALL.
5. CONNECT NEW LED FIXTURES TO EXISTING LIGHTING CIRCUIT(S) AS REQUIRED. ENSURE THAT CIRCUIT BREAKER AND CONDUCTOR SIZES DO NOT EXCEED 1200 WATTS ON A 15A CIRCUIT AND 1600 WATTS ON A 20A CIRCUIT. VERIFY EXISTING CONDITIONS AND REQUIREMENTS IN FIELD. PROVIDE ADDITIONAL CIRCUITS (C.B.,WIRING,CONDUITS) AS REQUIRED.

CONDUIT, WIRE SIZE AND

GROUNDING FOR HVAC UNITS

HACR BRKR SIZE	CONDUIT & WIRE SIZE
40A	1"C–3#8
45A	1"C–3#6
50A	1"C–3#6
60A	1"C–3#6
70A	1–1/4"C–3#4
80A	1–1/4"C–3#3
90A	1–1/4"C–3#3
100A	1–1/4"C–3#2
125A	1–1/2"C–3#1
150A	1–1/2"C–3#1/0
175A	2"C–3#2/0
200A	2"C–3#3/0
225A	2"C–3#4/0
250A	2–1/2"C–3#250

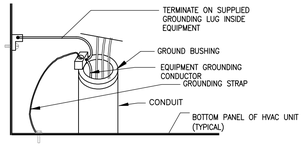

4 / E-4.0 HVAC GROUNDING DETAIL
NOT TO SCALE

THE CONTRACTOR SHALL BE RESPONSIBLE FOR FINAL COORDINATION OF ALL ELECTRICAL FEEDERS AND CIRCUIT BREAKERS WITH THE MANUFACTURER'S WRITTEN DATA FOR EACH MECHANICAL DEVICE PRIOR TO SUBMITTAL OF ANY ELECTRICAL EQUIPMENT FOR REVIEW. NO ADDITIONAL COMPENSATION WILL BE ALLOWED FOR ANY CHANGES TO ELECTRICAL FEEDERS OR CIRCUIT BREAKERS REQUIRED FOR ANY MECHANICAL DEVICES.

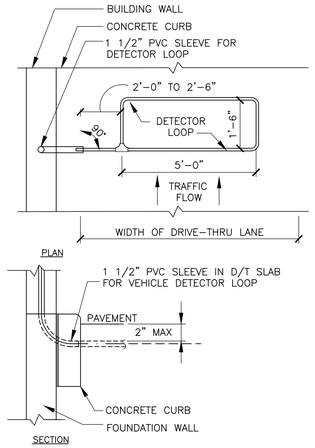

B – DT WINDOW DETECTOR LOOP

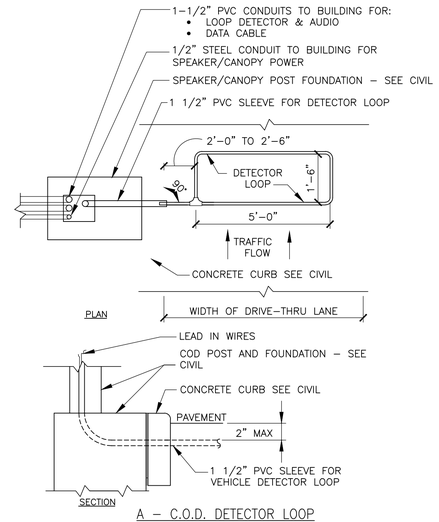

A – C.O.D. DETECTOR LOOP

2 / E-4.0 DETECTOR LOOP DETAILS
NOT TO SCALE

NOTES

1. VERIFY CONDUIT SIZES AND LAYOUT WITH DETECTOR LOOP MANUFACTURER.
2. CENTER VEHICLE DETECTOR LOOP (ITEM # 217.11E1) IN DRIVE THRU LANE. INSTALL PER MFR. RECOMMENDATIONS.
3. SEE CIVIL FOR DIMENSIONS OF DRIVE–THRU LANE CONCRETE PAD FOR DETECTOR LOOP.
4. NO STEEL (REBAR OR ELECTRICAL WIRE) SHALL BE USED WITHIN 2' OF LOOP.
5. DETECTOR LOOP MANUFACTURERS:
   DETECTOR LOOPS MAY BE BY ONE OF THE FOLLOWINGS COMPANIES OR EQUAL.
   3M: 1–800–328–0033
   HME: 1–800–848–4468
6. DETECTOR LOOP MATERIAL:
   PVC TUBING 1/2" I.D. 100 PSI LOOP MADE FROM ONE LENGTH OF THIN FOURTEEN GAUGE STRANDED WIRE. LEAD–IN IS PRE–TWISTED AT FACTORY.
7. DETECTOR LOOP CONSTRUCTION:
   FORMED WITH ONE CONTINUOUS LENGTH OF PVC WITH NO SHARP CORNERS AS DETAILED. WIRE LOOPED, FORMED, & PIGTAILED AS DETAILED.

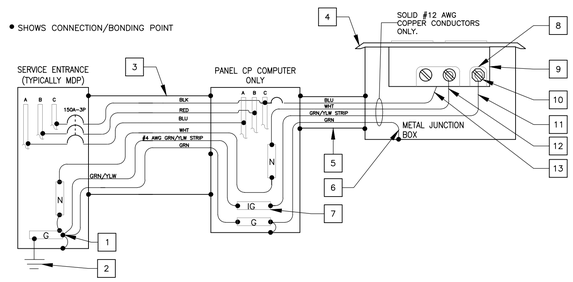

NOTES

1. ALL P.O.S. EQUIPMENT (COMPUTERS,PRINTERS,MONITORS KVS, MODEM, HUB & COD) SHALL BE POWERED FROM THE COMPUTER PANEL.

   ALL OTHER COMPUTER/DIGITAL EQUIPMENT SHALL BE POWERED FROM PHASE "A" IN THE COMPUTER PANEL.
2. ISOLATED GROUND INSTALLATION SHALL COMPLY WITH THE REQUIREMENTS OF NEC SECTION 250 .
3. EACH 20 AMP CIRCUIT SHALL HAVE IT'S OWN ISOLATED EQUIPMENT GROUNDING CONDUCTOR.
4. ENTIRE GROUNDING SYSTEM SHALL COMPLY WITH NEC ARTICLE 250 AND MCDONALD's BUILDING GROUNDING DETAIL.
5. EC SHALL VERIFY CORRECT POLARITY AT RECEPTACLE.
6. EC SHALL VERIFY THAT SUBPANEL CP DOES NOT CONTAIN ANY ILLEGAL NEUTRAL TO GROUND BONDS.
7. PANEL CP SHALL ONLY BE USED TO POWER SENSITIVE ELECTRONIC EQUIPMENT, AS OUTLINED IN NOTE #1. IT SHALL NOT BE USED TO POWER ANY OTHER LOADS.
8. IT IS A SAFETY HAZARD AND AN NEC VIOLATION FOR THE POS SYSTEM TO HAVE ITS OWN INDEPENDENT GROUNDING ROD. IF AN INDEPENDENT GROUND ROD IS FOUND FOR THE POS SYSTEM, IT SHALL BE BONDED TO THE BUILDING GROUNDING SYSTEM.

KEY NOTES

1. THIS IS THE ONLY POINT WHERE THE ISOLATED EQUIPMENT GROUNDING CONDUCTOR SHALL BE CONNECTED TO THE BUILDING'S GROUNDING SYSTEM.
2. SEE BUILDING GROUNDING DETAIL SHEET E4.2.
3. 2" METAL CONDUIT: 4–#1/0 CU + 1–#6 CU EQUIP GND + 1–#4 CU ISOLATED GND.
4. ALL ISOLATED GROUND/ DEDICATED CIRCUIT RECEPTACLE COVER PLATES SHALL BE ORANGE HUBBELL PJ7CO (SINGLE), PJ8CO (ONE DUPLEX) OR PJ82CO (TWO DUPLEX) MARKED "COMPUTER ONLY".
5. METAL CONDUIT SHALL CONTAIN ONLY P.O.S. CIRCUIT CONDUCTORS (DEDICATED CIRCUIT). ONLY USE RIGID NON–METALLIC CONDUIT BELOW GRADE WHEN REQUIRED BY LOCAL CODE.
6. EQUIPMENT GROUNDING BONDING CONDUCTOR (TYPICAL)
7. ISOLATED GROUND BUS, ELECTRICALLY INSULATED FROM PANEL ENCLOSURE USED TO TERMINATE ONLY ISOLATED EQUIPMENT GROUNDING CONDUCTORS.
8. ALL CONDUCTORS SHALL BE SOLID COPPER AND TERMINATED TO THEIR APPROPRIATE TERMINAL SCREWS BY WRAPPING THE CONDUCTOR COMPLETELY AROUND THE SCREW BARREL AND TIGHTENING THE SCREW PER MANUFACTURER'S TORQUE SPECIFICATIONS.
9. ISOLATED GROUND RECEPTACLE HUBBELL–IG4700,IG4710,IG5262 OR IG5261. SEE ROUGH IN SCHEDULE FOR THE APPROPRIATE RECEPTACLE TO USE.
10. ISOLATED GREEN GROUND SCREW.
11. ISOLATED EQUIPMENT GROUNDING CONDUCTOR (GRN W/YLW STRIP)
12. NEUTRAL CONDUCTOR TERMINATED ON SILVER SCREW.
13. PHASE CONDUCTOR TERMINATED ON BRASS SCREW

5 / E-4.0 POS & COD ISOLATED GROUND/DEDICATED CIRCUIT
NOT TO SCALE

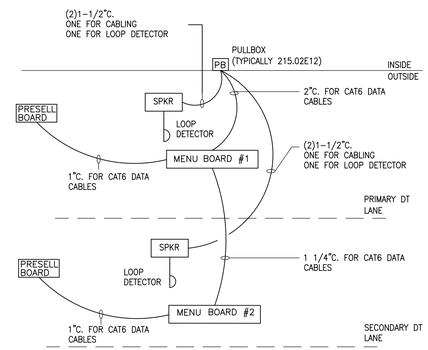

DT LOW VOLTAGE CONDUIT DIAGRAM
NOT TO SCALE

NOTE:

* VERIFY EXACT CIRCUITS & QUANTITIES OF CIRCUITS WITH PANEL SCHEDULES AND MANUFACTURERS INSTALLATION INSTRUCTIONS.

* VERIFY LOW VOLTAGE CABLE COUNT WITH POS INSTALLER. LOW VOLTAGE CABLE SUPPLIED AND TERMINATED BY POS INSTALLER. EC TO PULL CABLE.

(A) 2#12 & 1#12 GND. TO LP–1 FOR COD CANOPY LIGHTING.

(B) 4#12 & 1#12 GND & 1#12 ISOLATED GND., TO CP FOR ISOLATED GROUND POWER TO MENUBOARDS AND MEDIA PLAYERS.

(C) 2#12 & 1#12 GND & 1#12 ISOLATED GND., TO CP FOR ISOLATED GROUND POWER TO SPEAKER CANOPY/STAND. EACH CANOPY/STAND SHALL BE ON ITS OWN SEPARATE CIRCUIT.

(D) 2#12 & 1#12 GND & 1#12 ISOLATED GND., TO CP FOR ISOLATED GROUND POWER TO MENUBOARDS AND MEDIA PLAYERS.

(E) 2#12 & 1#12 GND & 1#12 ISOLATED GND., TO CP FOR ISOLATED GROUND POWER TO FOR PRESELL BOARDS AND MEDIA PLAYER.

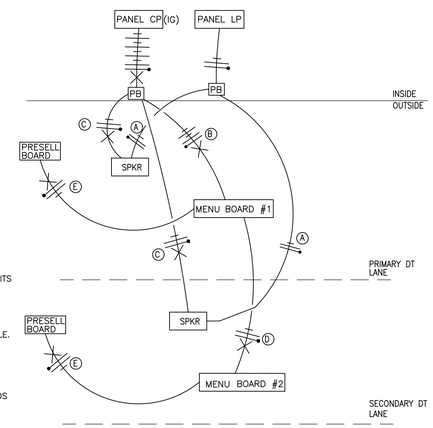

DRIVE THRU POWER DIAGRAM
NOT TO SCALE

REV	DATE	DESCRIPTION	BY

Robert D. Anderson ,Inc.
MEP Engineering & Design Consultants
HVAC*Illumination*Plumbing*Power Distribution*Controls

Robert D. Anderson
4403 Zion Rd.
Garland ,TX 75043

voice: 972-814-7324
email: robert.d.anderson@sbcglobal.net
contact: Mark Swanson-Project Manager
voice: 817-556-0986
email: mark@mepdesigntx.com

DRAWING IS DIAGRAMMATIC, AND AS SUCH ADJUSTMENTS FOR UNKNOWN FIELD CONDITIONS MAY BE REQUIRED. THIS DRAWING WAS PREPARED FOR SPECIFIC USE ON THE DATE AND SITE INDICATED HEREON. ANY USE OF THIS DRAWING ON ANY OTHER SITE OR FOR ANY OTHER PROJECT REQUIRES THE REVIEW OF THE ENGINEER. DRAWINGS ARE SUBJECT TO COPYRIGHT AND MAY NOT BE REPRODUCED, DISTRIBUTED, PUBLISHED OR USED IN ANY WAY WITHOUT THE EXPRESS WRITTEN CONSENT OF ROBERT D. ANDERSON, P.E.

STATE OF TEXAS
ROBERT D. ANDERSON
44987
LICENSED PROFESSIONAL ENGINEER
08/24/24
Firm No. F-5324

PREPARED FOR: McDonald's USA, LLC
© 2024 McDonald's USA, LLC
These drawings and specifications are the confidential and proprietary property of McDonald's USA, LLC and shall not be copied or reproduced without written authorization. The contract documents were prepared for use on the specific site identified with the issue date and are not to be used for other locations. Differences between these drawings and the site conditions or another project requires the services of properly licensed architects and engineers. Reproductions of the contract documents for resale or other purposes is not authorized.

DRAWN BY: MES
STD ISSUE DATE: 2024
REVIEWED BY: JAW
DATE ISSUED: 10/11/2024

TITLE: 2024 STANDARD BUILDING – BB20
4584–WOOD/WOOD

DESCRIPTION	
WOOD BEARING WALLS WITH HARDIE SIDING	
WOOD ROOF TRUSS FRAMING	
EIFS/BATTEN/METAL/HARDIE SIDING EXTERIOR FINISHES	
SITE ID	SITE ADDRESS
042–3591	NWC OF FM 460 & FM 740, FORNEY TEXAS

JAWA 24–0151

SHEET NO. E4.0
WIRING DETAILS

LIGHTING CONTROL SYSTEM

INTERIOR CUSTOMER LIGHTING

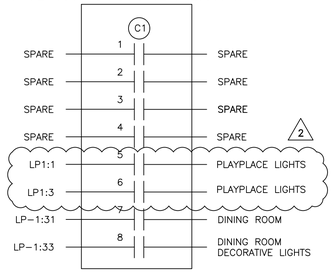

INTERIOR CREW LIGHTING

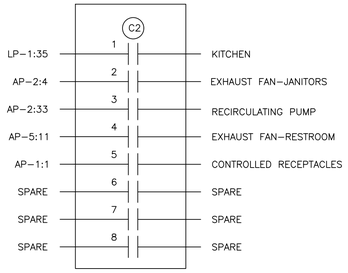

BUILDING FACADE

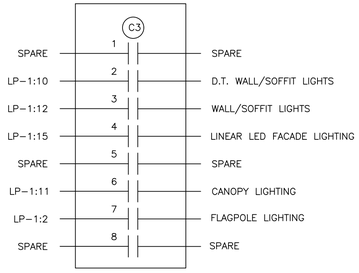

EXTERIOR LIGHTING

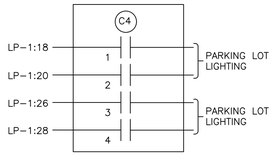

EXTERIOR LIGHTING

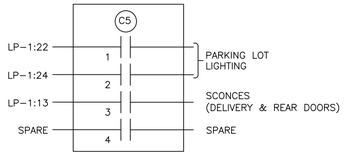

EXTERIOR SIGNAGE

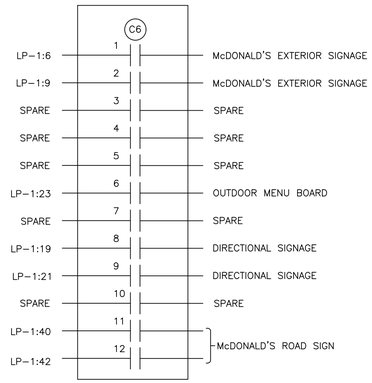

INTERIOR LIGHTING CONTROL SCHEDULE							
	LOCAL CONTROL	MANUAL ON	PARTIAL ON	MULTI LEVEL	DAYLIGHTING	AUTO OFF	SCHEDULE OFF
DINING	MANAGERS OFFICE		X		X		X
KITCHEN	MANAGERS OFFICE		X				X
SUPPORT/STOCK	X					X	
CREW	X	X		X		X	
MANAGER	X	X		X		X	
BATHROOM						X	
SMALL STORAGE	X	X				X	
ENTRY VESTIBULE							X

NOTES:
1. LOCAL CONTROL: MANUAL LIGHTING CONTROL THAT PROVIDES ON AND OFF CONTROL IN SPACE. REMOTE LOCATION CONTROL DEVICE MUST BE LABELED TO IDENTIFY CONTROLLED LIGHTING.
2. MANUAL ON: NONE OF THE LIGHTING SHALL BE AUTOMATICALLY TURNED ON.
3. PARTIAL ON: 50% OF THE GENERAL LIGHTING SHALL BE AUTOMATICALLY TURNED ON.
4. MULTI LEVEL: GENERAL LIGHTING SHALL BE FITTED WITH A MANUAL CONTROLLED CONTINUOUS DIMMER.
5. DAYLIGHTING: REQUIRED WHEN PRIMARY AND SECONDARY ZONES CONTAIN 150W OF GENERAL LIGHTING. PHOTOCONTROL SHALL REDUCE LIGHTING IN RESPONSE TO AVAILABLE DAYLIGHT USING CONTINUOUS DIMMING TO 20% AND OFF.
6. AUTO OFF: ALL LIGHTING INCLUDING LIGHTING CONNECTED TO EMERGENCY CIRCUITS SHALL BE AUTOMATICALLY SHUT OFF WITHIN 20 MINUTES OF OCCUPANTS LEAVING THE SPACE.
7. SCHEDULE OFF: ALL LIGHTING, INCLUDING LIGHTING CONNECTED TO EMERGENCY CIRCUITS, SHALL BE AUTOMATICALLY SHUT OFF DURING PERIODS WHEN THE SPACE IS SCHEDULED TO BE UNOCCUPIED.
8. 0.02W PER SQUARE FT OF BUILDING ALLOWED TO BE CONTINUOUSLY LIT.

EXTERIOR LIGHTING CONTROL SCHEDULE			
	TIME CLOCK	PHOTCELL	OCCUPANCY SENSOR
POLE LIGHTING	X	X	X
BUILDING MOUNT LIGHTING	X	X	
SIGNAGE	X	X	

NOTES:
1. TIME CLOCK: LIGHTING SHALL BE AUTOMATICALLY SHUT OFF BETWEEN BUSINESS CLOSING (OR MIDNIGHT) AND BUSINESS OPENING (OR 6AM) WHICHEVER PROVIDES THE SHORTEST OFF DURATION.
2. PHOTOCELL: LIGHTING SHALL BE AUTOMATICALLY TURNED OFF WHEN SUFFICIENT DAYLIGHT IS AVAILABLE.
3. OCCUPANCY SENSOR: LIGHTING SHALL AUTOMATICALLY REDUCE THE CONNECTED LIGHTING POWER BY 50% WHEN NO ACTIVITY HAS BEEN DETECTED IN AREA IN 15 MINUTES. NO MORE THAN 1500W OF LIGHTING PER CONTROL ZONE.

LIGHTING CONTROL NOTES:

LIGHTING CONTROL NOTES

LC1. CONTACTOR DETAILS ARE DIAGRAMMATIC ONLY AND ARE SHOWN WITH TYPICAL LOADS AND CIRCUIT ASSIGNMENTS. LOADS, CIRCUIT ASSIGNMENTS AND NUMBER OF CONTACTORS MAY VARY BY RESTAURANT LOCATION AND PER BAS SUPPLIERS SYSTEMS. VERIFY EXACT REQUIREMENTS WITH BAS INSTALLATION DETAILS, SITE PLANS, ELECTRICAL PANEL SCHEDULES AND ACM. EC SHALL MAKE ALL MODIFICATIONS AS REQUIRED. FINAL INSTALLATION SHALL BE FULLY NEC AND ENERGY CODE COMPLIANT.

LC2. ELECTRICAL CONTRACTOR SHALL FURNISH AND INSTALL ALL WIRING, CONNECTIONS, TERMINATIONS, ETC. THAT ARE NOT PROVIDED BY THE BAS SUPPLIER FOR A COMPLETE, FULLY OPERATIONAL AND CODE COMPLIANT LIGHTING CONTROL SYSTEM.

LC3. ALL COMPONENTS FOR THIS LIGHTING CONTROL SYSTEM SHALL BE INSTALLED BY THE ELECTRICAL CONTRACTOR. SEE BOXED NOTE BELOW FOR OPTIONS.

LC4. ALL COMPONENTS SHALL BE UL LISTED AND LABELED AND THE SYSTEM SHALL COMPLY WITH ALL LOCAL, STATE AND FEDERAL ENERGY CODE REQUIREMENTS.

LC5. ALL CONTACTORS SHALL BE LOCATED IN A NEMA 1 ENCLOSURE WITH SCREW TYPE COVER MOUNTED DIRECTLY ABOVE LIGHTING PANEL OR SWITCHGEAR SO AS TO BE ACCESSIBLE.

LC6. ALL CONTACTORS SHALL BE RATED FOR 30 AMP LOADS UNLESS NOTED OTHERWISE AND SHALL BE HID RATED WHERE REQUIRED.

LC7. COIL VOLTAGES FOR ALL CONTACTORS SHALL BE 120 VOLT UNLESS NOTED OTHERWISE.

LC8. CONTACTOR C5 IS INTENDED TO CONTROL PARKING LOT LIGHTS NEAR TRASH CORRAL, DELIVERY DOORS, AND EMPLOYEE PARKING, THUS ALLOWING A DIFFERENT LIGHTING SCHEDULE TO BE USED IN THOSE AREAS.

LIGHTING CONTROL INSTALLATION OPTIONS

OPTION 1 (STANDARD) CONTACTORS AND CONTACTOR ENCLOSURE FOR THIS LIGHTING CONTROL SYSTEM SHALL BE FURNISHED BY THE BAS SUPPLIER AND INSTALLED BY THE ELECTRICAL CONTRACTOR ON SITE FOR A COMPLETE AND FULLY FUNCTIONAL SYSTEM.

OPTION 2 (OPTIONAL) LIGHTING CONTROL CAN BE ACCOMPLISHED VIA UTILIZATION OF A SMART TYPE BREAKER PANEL REPLACING STANDARD PANEL LP-1. PANEL SHALL UTILIZE AN INTEGRAL MOTOR OPERATED CIRCUIT BREAKERS OR AN INTEGRAL CIRCUIT BREAKER/CONTACTOR TYPE COMBINATION DEVICE WITH AN INTEGRAL PROGRAMMING CONTROL MODULE AND SHALL BE ORDERED THROUGH OUR ELECTRICAL EQUIPMENT NATIONAL ACCOUNT PROGRAM (SQUARE-D) THROUGH OUR CONSTRUCTION PURCHASING TEAM.

BUILDING AUTOMATION SYSTEM

INSTALLATION & TECHNICAL ASSISTANCE INFORMATION:
LENNOX BAS: McD@CCBAC.com

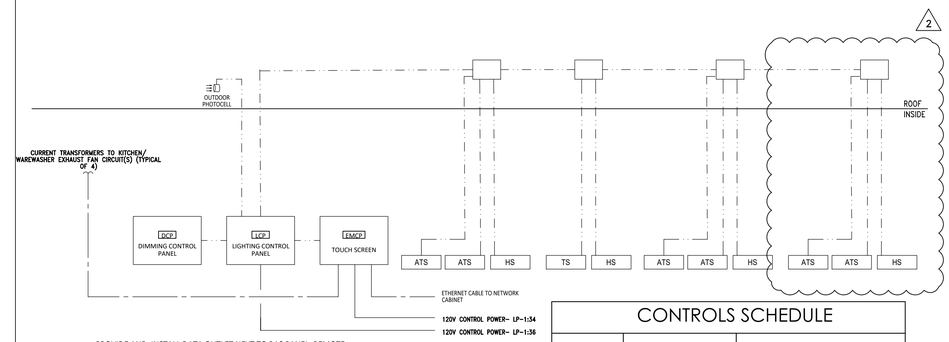

PROVIDE AND INSTALL DATA OUTLET NEXT TO BAS PANEL. REMOTE COMMISSIONING IS NOT POSSIBLE WITHOUT DATA CONNECTION.

CONTROLS SCHEDULE

MARK	DESCRIPTION	MANUFACTURER MODEL
TS	TEMPERATURE SENSOR	*PROVIDED WITH BAS
ATS	AVERAGING TEMPERATURE SENSOR	*PROVIDED WITH BAS
HS	HUMIDITY SENSOR	*PROVIDED WITH BAS

NOTES:
1. FOR TS, HS AND ATS LOCATIONS, REFER TO M1.2

WIRE LEGEND

MARK	WIRE/CABLE TYPE
—— - ——	CAT 5E
—— · · ——	18 AWG CONDUCTORS

INSTALLATION NOTES:

1. PROVIDE, INSTALL AND SECURE ALL NECESSARY CABLE & CONDUIT PER BAS DRAWINGS AND SPECIFICATIONS.
2. MOUNT ALL BAS CONTROL ENCLOSURES.
3. PERFORM ALL LOW VOLTAGE TERMINATIONS.
4. ROUGH-IN, INSTALLATION AND WIRING FOR TEMPERATURE SENSORS AND TOUCHSCREEN PER PLAN LOCATIONS.
5. PROVIDE POWER CIRCUITS INTO CONTROL CANS PER BAS DETAILS.
6. COORDINATE WITH SUPPLIER TO SCHEDULE REMOTE COMMISSIONING.
7. CORRECT ALL PUNCH LIST ITEMS FOUND DURING REMOTE COMMISSIONING.

BUILDING AUTOMATION SYSTEM NOTES

BAS1. THE DIAGRAM SHOWN ABOVE IS SCHEMATIC IN NATURE AND SHOWS THE GENERAL REQUIREMENTS FOR THE INSTALLATION OF THE BUILDING AUTOMATION SYSTEM. EXACT EQUIPMENT REQUIREMENTS AND QUANTITIES WILL VARY PER SITE. G.C., M.C., T.C.C. AND E.C. SHALL COORDINATE ALL EXACT EQUIPMENT AND INSTALLATION REQUIREMENTS WITH SUPPLIER PRIOR TO SUBMITTING BID FOR A COMPLETE AND FULLY FUNCTIONAL SYSTEM.

BAS2. THE BUILDING AUTOMATION SYSTEM ALSO HAS ADDITIONAL OPTIONS AVAILABLE SUCH AS MONITORING DOOR CONTACTS (RESTROOM & COOLER FREEZER), ENERGY METER, COOLER/FREEZER TEMP. ADDITIONAL OPTIONS MAY BE SELECTED ON CENTRAL PURCHASING PROJECT DETAIL FORM. G.C., M.C., T.C.C. AND E.C. SHALL COORDINATE ALL EXACT INSTALLATION REQUIREMENTS WITH SUPPLIER PRIOR TO SUBMITTING BID FOR A COMPLETE AND FULLY FUNCTIONAL SYSTEM.

BAS3. ELECTRICAL CONTRACTOR SHALL FURNISH AND INSTALL ALL LINE AND LOW VOLTAGE WIRING AND CONNECTIONS, INCLUDING BUT NOT LIMITED TO CONTROL POWER TO ALL BAS COMPONENTS AND POWER CIRCUITRY WIRING OF ALL LIGHTING CONTACTORS. COORDINATE INSTALLATION WITH SITE SPECIFIC BAS INSTALLATION DETAILS PROVIDED BY SUPPLIER.

REV	DATE	DESCRIPTION	BY
1	04/08/2025	COUNTY COMMENTS, M&O QC COMMENTS, & UTILITY COORDINATION	TPF
2	05/09/2025	PLAYPLACE ADDITION	

Robert D. Anderson ,Inc.
MEP Engineering & Design Consultants
HVAC*Illumination*Plumbing*Power Distribution*Controls
Robert D. Anderson
4403 Zion Rd.
Garland ,TX 75043
voice: 972-814-7324
email: robert.d.anderson@sbcglobal.net
contact: Mark Swanson-Project Manager
voice: 817-556-0986
email: mark@mepdesigntx.com

DRAWING IS DIAGRAMMATIC, AND AS SUCH ADJUSTMENTS FOR UNKNOWN FIELD CONDITIONS MAY BE REQUIRED. THIS DRAWING WAS PREPARED FOR SPECIFIC USE ON THE DATE AND SITE INDICATED HEREON. ANY USE OF THIS DRAWING ON ANOTHER PROJECT OR ON THIS SITE ON ANY PROJECT REQUIRES THE SERVICES OF THE ENGINEER. DRAWINGS ARE SUBJECT TO COPYRIGHT AND MAY NOT BE REPRODUCED, DISTRIBUTED, PUBLISHED OR USED IN ANY WAY WITHOUT THE EXPRESS WRITTEN CONSENT OF ROBERT D. ANDERSON, P.E.

STATE OF TEXAS
ROBERT D. ANDERSON
44987
LICENSED PROFESSIONAL ENGINEER
Robert D. Anderson 06/12/25
Firm No. F-5324

@ 2024 McDonald's USA, LLC

PREPARED FOR: McDonald's USA, LLC

These drawings and specifications are the confidential and proprietary property of McDonald's USA, LLC and shall not be copied or reproduced without written authorization. The contract documents were prepared for use on the specific site configuration and at the issue date only. For subsequent use of these documents, McDonald's USA, LLC and/or these drawings for reference or example on another project requires the services of properly licensed architect and engineer. Reproduction of the contract documents for reuse on another project is not authorized.

DRAWN BY MDS
STD. ISSUE DATE 2024
REVIEWED BY JAW
DATE ISSUED 10/11/2024

TITLE 2024 STANDARD BUILDING – BB20 4584-WOOD/WOOD
DESCRIPTION WOOD BEARING WALLS WITH HARDIE SIDING WOOD ROOF TRUSS FRAMING EFS/BATTEN/METAL/HARDIE SIDING EXTERIOR FINISHES
SITE ID 042-3591
SITE ADDRESS NWC OF FM 460 & FM 740, FORNEY TEXAS

SHEET NO. JAWA 24-0151 E4.1
LIGHTING CONTROLS

MLO, AIC: NOTES D6,D7,&D8, Mounting: flush, NEMA 1 — PANEL LP-1 — 225A, 208Y/120 VAC, 3PH, 4W, CB TYPE: BL or BLH

WATTS A	WATTS B	WATTS C	DESCRIPTION	BRKR REQ	TRIP POLES	CCT NO.	CCT NO.	TRIP POLES	BRKR REQ	DESCRIPTION	WATTS A	WATTS B	WATTS C
0			Spare		20A-1	1	2	20A-1	S	Flag Pole	220		
	0		Spare		20A-1	3	4	20A-1		Spare		0	
		0	Spare		20A-1	5	6	20A-1	S	Exterior Signage			294
0			Spare		20A-1	7	8	20A-1	S	Spare	0		
	294		Exterior Signage	S	20A-1	9	10	20A-1	S	Exterior Wall/Soffit Lights DT		114	
		193	Flood Lights & Canopy lights	S	20A-1	11	12	20A-1	S	Exterior Wall/Soffit Lights			114
42			Back of House Sconces	S,L	20A-1	13	14	20A-1		DCO In Road Sign Base	180		
	126		Linear LED Façade Lighting	S	20A-1	15	16	20A-1	L	Dr Alarm\COD;\Access Control panel		524	
		0	Spare		20A-1	17	18	30A-2		Lot Lights			480
96			Directional Sign	S	20A-1	19	20	|		|	480		
	96		Directional Sign	S	20A-1	21	22	30A-2		Lot Lights		240	
		120	COD lighting	S	20A-1	23	24	|		|			240
0			Spare		20A-1	25	26	30A-2		Lot Lights	480		
	30		Toy Display	S	20A-1	27	28	|		|		480	
		0	Spare	S	20A-1	29	30	30A-2		Spare			0
308			Dining Area Lighting	S	20A-1	31	32	|		|	0		
	189		Pendants/cove lights	S	20A-1	33	34	20A-1	L	BAS Controller		300	
		880	Kitchen Lighting	S	20A-1	35	36	20A-1	L	Lighting Control Panel			180
176			Restroom Lighting	S	20A-1	37	38	20A-1	S,L	Exit/Egress Lighting	80		
	520		Support Area Lighting	S	20A-1	39	40	60A-2	S	Mcd'S Road Sign		2496	
		0	Spare		20A-1	41	42	|	|	|			2496
										Total Connect	2062	5409	4997
										Connect Amps		35	Amps
										Demand Amps		43	Amps

MLO, AIC: NOTES D6,D7,&D8, Mounting: MDP, NEMA 1 — PANEL AP-4 — 225A, 208Y/120 VAC, 3PH, 4W, CB TYPE: BL or BLH

WATTS A	WATTS B	WATTS C	DESCRIPTION	BRKR REQ	TRP PLS	CCT NO.	CCT NO.	TRP PLS	BRKR REQ	DESCRIPTION	WATTS A	WATTS B	WATTS C
2604			Clamshell Grill	G	50A-3	1	2	30A-3	G	Combi Oven	1812		
	2604		|	|	|	3	4	|	|	|	1812	
		2604	|	|	|	5	6	|	|	|		1812
5196			Clamshell Grill	G	50A-3	7	8	30A-3	G	Combi Oven	1812		
	5196		|	|	|	9	10	|	|	|	1812	
		5196	|	|	|	11	12	|	|	|		1812
4668			3-Vat-Fryer-Electric-F/F/F	G	50A-3	13	14	15A-1		Combi Oven Hood	960		
	4668		|	|	|	15	16	15A-1		Combi Oven Hood		960	
		4668	|	|	|	17	18			Space			0
4668			3-Vat-Fryer-Electric-F/F/F	G	50A-3	19	20			Space	0		
	4668		|	|	|	21	22			Space		0	
		4668	|	|	|	23	24			Space			0
4668			3-Vat-Fryer-Electric-F/F/F	G	50A-3	25	26			Space	0		
	4668		|	|	|	27	28			Space		0	
		4668	|	|	|	29	30			Space			0
0			Space			31	32			Space	0		
	0		Space			33	34			Space		0	
		0	Space			35	36			Space			0
0			Space			37	38			Space	0		
	0		Space			39	40			Space		0	
		0	Space			41	42			Space			0
										Total Connect	26388	26408	25428
										Connect Amps		217	Amps
										Demand Amps		141	Amps

150 MLO AIC: SEE NOTES D6, D7, & D8, Mounting: Flush — COMPUTER PANEL — 150A, 208Y/120 VAC, 3PH, 4W, CB TYPE: BL or BLH

WATTS A	WATTS B	WATTS C	DESCRIPTION	BRKR REQ	TRP PLS	CCT NO.	CCT NO.	TRIP- PLS	BRKR REQ	DESCRIPTION	WATTS A	WATTS B	WATTS C
1656			Pres Pos Reg/Vid Mon/HeadSet/Label	L	20A-1	1	2	20A-1	L	Spare	0		
	1200		Kvs Mon Oat/Vid Mon/Rec/Label	G, L	20A-1	3	4	20A-1	L	Rec		84	
		120	CctvTimer	L	20A-1	5	6	20A-1	L	Digital Merch/Media Player			432
630			Order Pos Reg/Vid Mon/ Coin dispenser	L	20A-1	7	8	20A-1	G,L	Kvs Mon Kit/Labeling System	600		
	720		Vid Mon	G,L	20A-1	9	10	20A-1		Zoom Timer		720	
		600	Tech Rack	L	20A-1	11	12	30A-1	L	Tech Rack UPS			1680
0			Spare	L	20A-1	13	14	20A-1	L	Cod Optical Isolator	120		
	1200		Tech Rack	L	20A-1	15	16	20A-1	L	Speaker Canopy #1		120	
		1440	Tech Rack	L	20A-1	17	18	20A-1	L	Speaker Canopy #2			120
444			Counter Pos Reg/ Rec	L	20A-1	19	20	20A-1	L	Office desk Unit	1200		
	0		Spare	L	20A-1	21	22	20A-1	L	Office desk Unit		1200	
		900	KVS Mon/Kit/Del. Pos Reg	G,L	20A-1	23	24	20A-1	L	Order Cash Recycler			528
1860			Exterior Menu Boards/Media Player	L	20A-1	25	26	20A-1	G,L	Kvs Mon Prep	360		
	528		Counter Cash Recycler	L	20A-1	27	28	20A-1	G,L	Time Clock		60	
		1860	Exterior Menu Boards/Media Player	L	20A-1	29	30	20A-1	L	Kiosk Cash Handler			528
480			DO Equipment Rack	L	20A-1	31	32	20A-1	L	Kiosks	1080		
	0		Space			33	34	20A-1	L	Kiosks		1080	
		0	Space			35	36	20A-1	L	Kiosks			1080
			Space			37	38			Space	0		
0			Space			39	40			Space		0	
	0		Space			41	42			Space			0
										Total Connect	8430	6912	9288
										Connect Amps		68	Amps
										Demand Amps		85	Amps

MLO, AIC: NOTES D6, D7, & D8, Mounting: MDP, NEMA — PANEL AP-1 — 225A, 208Y/120 VAC, 3PH, 4W, CB TYPE: BL or BLH

WATTS A	WATTS B	WATTS C	DESCRIPTION	BRKR REQ	TRP PLS	CCT NO.	CCT NO.	TRIP PLS	BRKR REQ	DESCRIPTION	WATTS A	WATTS B	WATTS C
1620			Dco-manager's office/crew room		20A-1	1	2	20A-2	G	Coffee brewer (presenter's booth)	1612		
	720		Dco-General Purpose	G	20A-1	3	4	|	|	|		1612	
		1200	Crew Microwave	G	20A-1	5	6	20A-1	G	ABS (phase c, presenter's booth)			1788
120			Safe - (mo) DCO Gen Purp	L	20A-1	7	8	20A-1	G	Juice disp/ coffee cream disp	840		
	240		Remote Order Battery		20A-1	9	10	20A-1	G	CO2 Detector		120	
		960	Merge/audio sys/drv mon/Deliv.	G	20A-1	11	12	20A-1	G	Automated beverage sys			600
960			Washer		15A-1	13	14	20A-2	G	Coffee Brewer (front counter)	1612		
	1800		Hand Held Order		20A-1	15	16	|	|	|		1612	
		120	Computer Room (TF/1)		20A-1	17	18	30A-3	G	Heat treat combo shake			1560
2246			Espresso Brewer	G	30A-2	19	20	|	|	|	1560		
	2246		|	|	|	21	22	|	|	|		1560	
		1500	3-Vat fryer hood interlock		20A-1	23	24	20A-1		3-Vat fryer hood Interlock			1176
1320			Reach in Freezer-SW	G	20A-1	25	26	20A-2	H	Ice Machine Remote Cond 1400lb	104		
	1080		Frozen fry dispenser (fry wall)	G	20A-1	27	28	|	|	|		104	
		2112	4-Vat fryer hood interlock		20A-1	29	30	20A-1	G	Reach in Freezer-SW			1320
1500			Fry Bagging Station	L,G	20A-1	31	32	15A-3	H	Ice Machine Remote Cond 1000lb	1332		
	60		Hand Wash Timers	G	20A-1	33	34	|	|	|		1332	
		1320	Reach in Freezer-SW	G	20A-1	35	36	|	|	|			1332
132			Ice mach - 1000 lb (self serve)		15A-1	37	38	15A-3	H	Ice Machine Remote Cond 1000lb	1332		
	132		Ice mach - 1000 lb (self serve)		15A-1	39	40	|	|	|		1332	
		1656	4-Vat fryer hd interlock		20A-1	41	42	|	|	|			1332
										Total Connect	16290	13950	17976
										Connect Amps		134	Amps
										Demand Amps		93	Amps

MLO, AIC: NOTES D6,D7,&D8, Mounting: FLUSH, NEMA — PANEL AP-5 — 225A, 208Y/120 VAC, 3PH, 4W, CB TYPE: BL or BLH

WATTS A	WATTS B	WATTS C	DESCRIPTION	BRKR REQ	TRP PLS	CCT NO.	CCT NO.	TRIP PLS	BRKR REQ	DESCRIPTION	WATTS A	WATTS B	WATTS C
600			Fridge/Freezer 2Dr Base	G	20A-1	1	2	20A-1		Warewasher Exhaust Fan	864		
	600		Fridge/Freezer 2Dr Base	G	20A-1	3	4	20A-2	G	Universal Holding Cabinet P&S		1581	
		600	Fridge/Freezer 2Dr Base	G	20A-1	5	6	|	|	|			1581
600			Fridge/Freezer 2Dr Base	G	20A-1	7	8	20A-2	G	Univeral Holding Cabinet P&S	1581		
	600		Fridge/Freezer 2Dr Base	G	20A-1	9	10	|	|	|		1581	
		864	Toilet Exhaust Fan	G	20A-1	11	12	20A-1	G	Univeral Holding Cabinet Table			240
540			Roof Receptacles	G	20A-1	13	14	20A-1		DT Power Window	120		
	132		Sparkle Table	G	20A-1	15	16	20A-1		DT Power Window		120	
		2080	Frozen Carbonated Beverage	G	30A-2	17	18	20A-1		DT Power Window			120
2080			|	|	|	19	20	20A-2	G	Coffee Brewer (front counter)	1612		
	360		Delivery Tablets	G	20A-1	21	22	|	|	|		1612	
		600	Wall Mount Frz Unit SW HC	G	20A-1	23	24	20A-1	G	Pie Display			564
828			Bulk Oil System	G	20A-1	25	26	20A-2	G	Pie Display	564		
	2620		Universal Radiant Toaster	G	30A-2	27	28	20A-1		Spare		0	
		2620	|	|	|	29	30	20A-1		DCO-Muzak satellite system			120
3230			Warewasher 1of2	G	30A-3	31	32	20A-1		Clg. Mt window recepts	540		
	3230		|	|	|	33	34	20A-2	G	Humidified holding cabinet		947	
		3230	|	|	|	35	36	|	|	|			947
3230			Warewasher 2of2	G	30A-3	37	38	20A-2	H	Remote Condensing Unit	1560		
	3230		|	|	|	39	40	|	|	|	1560	
		3230	|	|	|	41	42	20A-1		Spare			
										Total Connect	17949	18173	16796
										Connect Amps		147	Amps
										Demand Amps		95	Amps

MLO, AIC: NOTES D6,D7,&D8, Mounting: MDP, NEMA 1 — PANEL AP-2 — 225A, 208Y/120 VAC, 3PH, 4W, CB TYPE: BL or BLH

WATTS A	WATTS B	WATTS C	DESCRIPTION	BRKR REQ	TRP PLS	CCT NO.	CCT NO.	TRIP PLS	BRKR REQ	DESCRIPTION	WATTS A	WATTS B	WATTS C
1536			Ice machine 1400LB	H	20A-3	1	2	20A-1		Spare	0		
	1536		|	|	|	3	4	20A-1		Janitors EF		100	
		1536	|	|	|	5	6	20A-1	G	Dco-General Purpose			540
144			Blender McFlurry	G	20A-1	7	8	20A-1	G	Reftrg-wt-48"	600		
	180		Janitor's closet	G	20A-1	9	10	30A-2	H	Trash Compactor		2496	
		0	Spare		20A-1	11	12	|	|	|			2496
0			Spare		20A-1	13	14	20A-1		Walk in cooler / freezer	600		
	864		Bulk oil system (sup area)	G	20A-1	15	16	20A-1		Walk in cooler / freezer		600	
		1668	Clm grll exhast hood interlock		20A-1	17	18	20A-2	G	Clng oven - P& S			1550
840			Meat freezer DW (grill side)	G	20A-1	19	20	|	|	|	1550		
	120		Clean in place panel	G	20A-1	21	22	20A-1	G	Specialty Coffee Refrigerator 27"		468	
		490	Reverse Osmosis, Filtration	G	20A-1	23	24	20A-1	G	Automated beverage sys			600
180			Dco in trash corrall	G	20A-1	25	26	20A-1	G	ABS (presenter's booth)	1788		
	1200		Bulk oil sys - support area (sa)	G	20A-1	27	28	20A-2	G	Clng oven - P& S		1550	
		1032	BIC Machine	G	20A-1	29	30	|	|	|			1550
324			Reach In SW fridge	G	20A-1	31	32	20A-2	G	Infusiion Tea Brewer	1352		
	120		Recirc pump		20A-1	33	34	|	|	|		1352	
		1632	Soda syst pack (support area)		20A-1	35	36	20A-1		Spare			0
3120			Soda syst pack (support area)		30A-3	37	38	20A-2	G	Clng oven - P& S	1602		
	3120		|	|	|	39	40	|	|	|	1602	
		3120	|	|	|	41	42	20A-1	G	Dco-General Purpose			540
										Total Connect	13836	15308	16754
										Connect Amps		127	Amps
										Demand Amps		84	Amps

MLO, AIC: NOTES D6,D7,&D8, Mounting: FLUSH, NEMA — PANEL AP-6

WATTS A	WATTS B	WATTS C	DESCRIPTION	BRKR REQ	TRP PLS	CCT NO.	CCT NO.	TRIP PLS	BRKR REQ	DESCRIPTION	WATTS A	WATTS B	WATTS C
1092			Hand Dryer	L,G	20A-1	1	2	20A-1		Unit AC-1	600		
	1092		Hand Dryer	L,G	20A-1	3	4	20A-1		Unit AC-2		600	
		1092	Hand Dryer	L,G	20A-1	5	6	20A-1		Unit AC-3			1200
1092			Hand Dryer	L,G	20A-1	7	8	20A-1		Unit AC-4	1200		
	104		Cooler Evap	H	20A-2	9	10	20A-1		Unit AC-5		600	
		104	|	|	|	11	12	20A-1		Spare			0
2111			Freezer Evap	H	30A-2	13	14	20A-1		Spare	0		
	2111		|	|	|	15	16	20A-1		Spare		0	
		0	Space			17	18	20A-1		Spare			0
0			Space			19	20	20A-1		Spare	0		
	0		Space			21	22			Space		0	
		0	Space			23	24			Space	0		
0			Space			25	26			Space	0		
	0		Space			27	28			Space		0	
		0	Space			29	30			Space			0
0			Space			31	32			Space	0		
	0		Space			33	34			Space		0	
		0	Space			35	36			Space			0
0			Space			37	38			Space	0		
	0		Space			39	40			Space		0	
		0	Space			41	42			Space			0
										Total Connect	6095	4507	2396
										Connect Amps		36	Amps
										Demand Amps		28	Amps

MLO, AIC: NOTES D6,D7,&D8, Mounting: MDP, NEMA 1 — PANEL AP-3 — 225A, 208Y/120 VAC, 3PH, 4W, CB TYPE: BL or BLH

WATTS A	WATTS B	WATTS C	DESCRIPTION	BRKR REQ	TRP PLS	CCT NO.	CCT NO.	TRIP- PLS	BRKR REQ	DESCRIPTION	WATTS A	WATTS B	WATTS C
4668			4-Vat-Fryer-Electric-S/S/S/S	G	50A-3	1	2	50A-3	G	4-Vat-Fryer-Electric-S/S/S/S	4668		
	4668		|	|	|	3	4	|	|	|		4668	
		4668	|	|	|	5	6	|	|	|			4668
4668			4-Vat-Fryer-Electric-S/S/S/S	G	50A-3	7	8	50A-3	G	4-Vat-Fryer-Electric-S/S/S/S	4668		
	4668		|	|	|	9	10	|	|	|	4668	
		4668	|	|	|	11	12	|	|	|			4668
0			Space			13	14	50A-3	G	Clamshell Grill	2604		
	0		Space			15	16	|	|	|		2604	
		0	Space			17	18	|	|	|			2604
0			Space			19	20	50A-3	G	Clamshell Grill	5196		
	0		Space			21	22	|	|	|		5196	
		0	Space			23	24	|	|	|			5196
0			Space			25	26			Space	0		
	0		Space			27	28			Space		0	
			Space			29	30			Space			0
0		0	Space			31	32			Space	0		
	0		Space			33	34			Space		0	
		0	Space			35	36			Space			0
0			Space			37	38			Space	0		
	0		Space			39	40			Space		0	
		0	Space			41	42			Space			0
										Total Connect	26472	26472	26472
										Connect Amps		220	Amps
										Demand Amps		143	Amps

1000A MLO, NOTES D6, D7, & D8, Mounting: Free Standing, NEMA 1 — PANEL MDP — 208Y/120 VAC, 3PH, 4W

WATTS A	WATTS B	WATTS C	DESCRIPTION	BRKR REQ	TRP PLS	CCT NO.	CCT NO.	TRP PLS	BRKR REQ	DESCRIPTION	WATTS A	WATTS B	WATTS C
2062	5409	4997	Lighting Panel 1: LP-1		225A-3	1	2	225A-3		Appliance Panel: AP-1	16290	13950	17976
13636	15308	16754	Appliance Panel: AP-2		225A-3	3	4	225A-3	SHT	Appliance Panel: AP-3	26472	26472	26472
17520	17520	17520	*Roof Top Unit 1	H	150A-3	5	6	150A-3	L	CP Panel	8430	6912	9288
6095	4507	2396	Appliance Panel: AP-6		225A-3	7	8	150A-3	H	*Roof Top Unit 3	15720	15720	15720
17949	18173	16796	Appliance Panel: AP-5		225A-3	9	10	225A-3	SHT	Appliance Panel: AP-4	26388	26408	25428
6992	7304	0	KES Breaker Panel		125A-2	11	12	40A-3	H	*Roof Top Unit 2	10890	10890	10890
18000	18000	18000	Water Heater	L	200A-3	13	14	100A-3	H	*Roof Top Unit 4	11040	11040	11040
2966	2966	2966	Remote Cond Unit	H	40A-3	15	16			SPD			
0	0	0	SPACE			17	18			SPD			
0	0	0	SPACE			19	20			SPD			
										Total Connect	200360	200489	196153
										Connect Amps		1657	Amps
										Demand Amps		856	Amps

* SEE ELECT SHTS FOR CONDUIT AND WIRE SIZE

SINGLE LINE RISER DIAGRAM

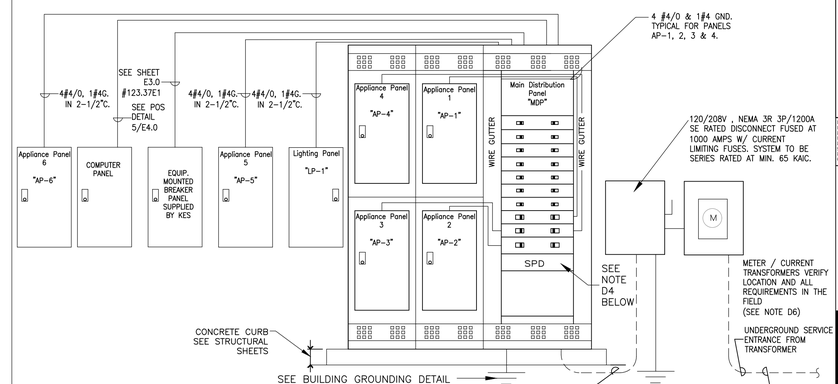

BUILDING ELECTRICAL GROUNDING DETAIL

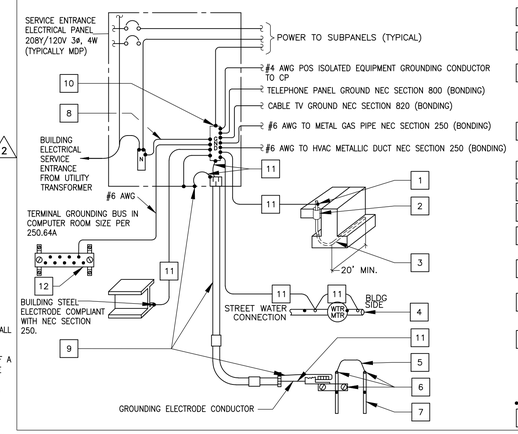

KEY NOTES

1. PROVIDE ENOUGH LENGTH TO TERMINATE DIRECTLY TO GROUND BUS OR USE BOLTED-TYPE CONNECTION DEVICE OR EXOTHERMIC WELD.
2. NON-METALLIC PROTECTIVE SLEEVE. LOCATE SLEEVE DIRECTLY UNDER THE ELECTRICAL SERVICE ENTRANCE PANEL. EC TO PROVIDE PLIABLE SEALANT BETWEEN COPPER WIRE AND SLEEVE.
3. FOR NEW CONSTRUCTION WHEN A SPREAD FOOTING OR DOWN TURNED SLAB IS USED, EC SHALL INSTALL A CONCRETE ENCASED ELECTRODE, COMPLIANT WITH NEC SECTION 250, CONSISTING OF AT LEAST 20 FEET OF BARE #4 AWG COPPER ENCASED IN 2 INCHES OF CONCRETE NEAR THE BOTTOM OF THE FOOTING OR FOUNDATION (BELOW GRADE) THAT IS IN DIRECT CONTACT WITH EARTH.
4. METAL UNDERGROUND WATER PIPE ELECTRODE COMPLIANT WITH NEC SECTION 250. THE GROUNDING CONNECTION TO THE INTERIOR METAL WATER PIPE SHALL BE MADE WITHIN THE FIRST FIVE FEET OF THE WATER PIPE ENTRANCE TO THE BUILDING.
5. IF MULTIPLE GROUNDING RODS ARE BEING USED OR NEED TO BE USED, THEY SHALL ALL BE BONDED TOGETHER PER NEC SECTION 250.
6. CLAMPS SUITABLE FOR DIRECT BURIAL OR EXOTHERMIC WELD.
7. 8'-0" X 5/8" CU ROD GROUNDING ELECTRODE COMPLIANT WITH NEC SECTION 250.
8. CU BONDING JUMPER SIZED PER NEC SECTION 250 OR FACTORY PROVIDED NEUTRAL TO GROUND BAR LINK. (THIS IS THE ONLY PLACE IN THE BUILDING WHERE N-G SHALL BE BONDED TOGETHER)
9. ALL METAL RACEWAYS CONTAINING GROUNDING ELECTRODE CONDUCTORS SHALL BE BONDED AT BOTH ENDS AS REQUIRED BY NEC SECTION 250. PROVIDE GROUNDING TYPE BUSHINGS & FITTINGS.
10. MCDONALD'S GROUNDING STANDARDS PURPOSELY EXCEED THOSE GIVEN BY THE NEC. THE ELECTRICAL CONTRACTOR SHALL PROVIDE A BUILDING GROUNDING SYSTEM MEETING NEC AND MCDONALD'S STANDARDS AS SHOWN ON THIS DRAWING.
11. CU GROUNDING ELECTRODE CONDUCTORS AND BONDING JUMPERS SHALL BE SIZED BASED UPON ELECTRICAL SERVICE SIZE PER NEC SECTION 250

800A	1000A	1200A
3/0 CU	3/0 CU	4/0 CU

● SHOWS CONNECTION/BONDING POINT

12. TERMINAL GROUNDING BUS AT 90"AFF. HARGER #GBI14212D.

DISTRIBUTION EQUIPMENT NOTES:

D1. ALL ELECTRICAL MATERIAL USED ON THIS PROJECT SHALL BE "UL" LISTED AND LABELED.

D2. THE EC/GC/AREA CONSTRUCTION MANAGER WHEN ORDERING PANELBOARDS, SHALL DETERMINE THE NUMBER OF SERVICE ENTRANCE CONDUCTORS, SIZE AND MATERIAL TYPE, AND SHALL PROVIDE THIS INFORMATION TO THE PANELBOARD SUPPLIER SO THAT THE APPROPRIATE LUGS CAN BE PROVIDED FROM THE FACTORY.

D3. ALUMINUM SERVICE ENTRANCE CONDUCTORS SHALL ONLY BE USED WHEN THEY ARE TERMINATED DIRECTLY TO THE LINE LUGS ON A C/T AND METERING CABINET, THE LINE LUGS OF A FUSIBLE DISCONNECT SWITCH OR TO THE LINE LUGS OF A MAIN LUG ONLY (6 HANDLE RULE) SERVICE ENTRANCE PANEL. ALUMINUM SERVICE ENTRANCE CONDUCTORS SHALL NOT BE TERMINATED TO THE LINE LUGS OF ANY MAIN BREAKER SINCE DOING SO WILL VIOLATE IT'S 100% UL RATING. IF ALUMINUM CONDUCTORS ARE USED AS PREVIOUSLY INDICATED THEY SHALL BE TERMINATED AS FOLLOWS, AND THE WIRE SIZE INCREASED DUE TO LOWER AMPACITY OF ALUMINUM. EXPOSED ALUMINUM CONDUCTOR STRANDS SHALL BE COATED WITH AN ANTI-OXIDANT IMMEDIATELY AFTER INSULATION IS STRIPPED AWAY. A COMPRESSION LUG SHALL BE PROPERLY INSTALLED ONTO THE EXPOSED ALUMINUM CONDUCTOR STRANDS, AND THAT COMPRESSION LUG SHALL THEN BE BOLTED TO THE TRANSFORMER TAPS AND SWITCHBOARD BUSS USING PROPERLY SIZED BOLTS, NUTS AND WASHERS. MERELY INSERTING ALUMINUM STRANDS UNDER A SCREW LUG SHALL NOT BE ACCEPTABLE.

D4. THE SURGE PROTECTIVE DEVICE (SPD) UNIT SHALL BE AN INTEGRAL UNIT PROVIDED AND INSTALLED BY THE SWITCHBOARD MANUFACTURER. ORDER APPROVED UNITS AS SHOWN IN D5.

D5. APPROVED SWITCHBOARDS, PANEL, & SPD SUPPLIER (IN ADDITION TO ORDERING SWITCHBOARD & PANELS ALSO ORDER SPD) SUPPLIERS:

SQUARE D VIA GRAYBAR
900 REGENCY DRIVE
GLENDALE HEIGHTS, IL 60139
TEL: (800)784-6059 OR (630) 671.6304

SPD INTEGRAL: I-LINE SERIES,
(208Y/120V, 3ø)

D6. MAIN INCOMING METER / CURRENT TRANSFORMER CABINET, MAIN DISTRIBUTION PANEL MDP, SERVICE CABINET AND SWITCH SHALL BE BRACED FOR THE HIGHEST AVAILABLE FAULT CURRENT BUT NOT LESS THAN NEMA SYMMETRIC

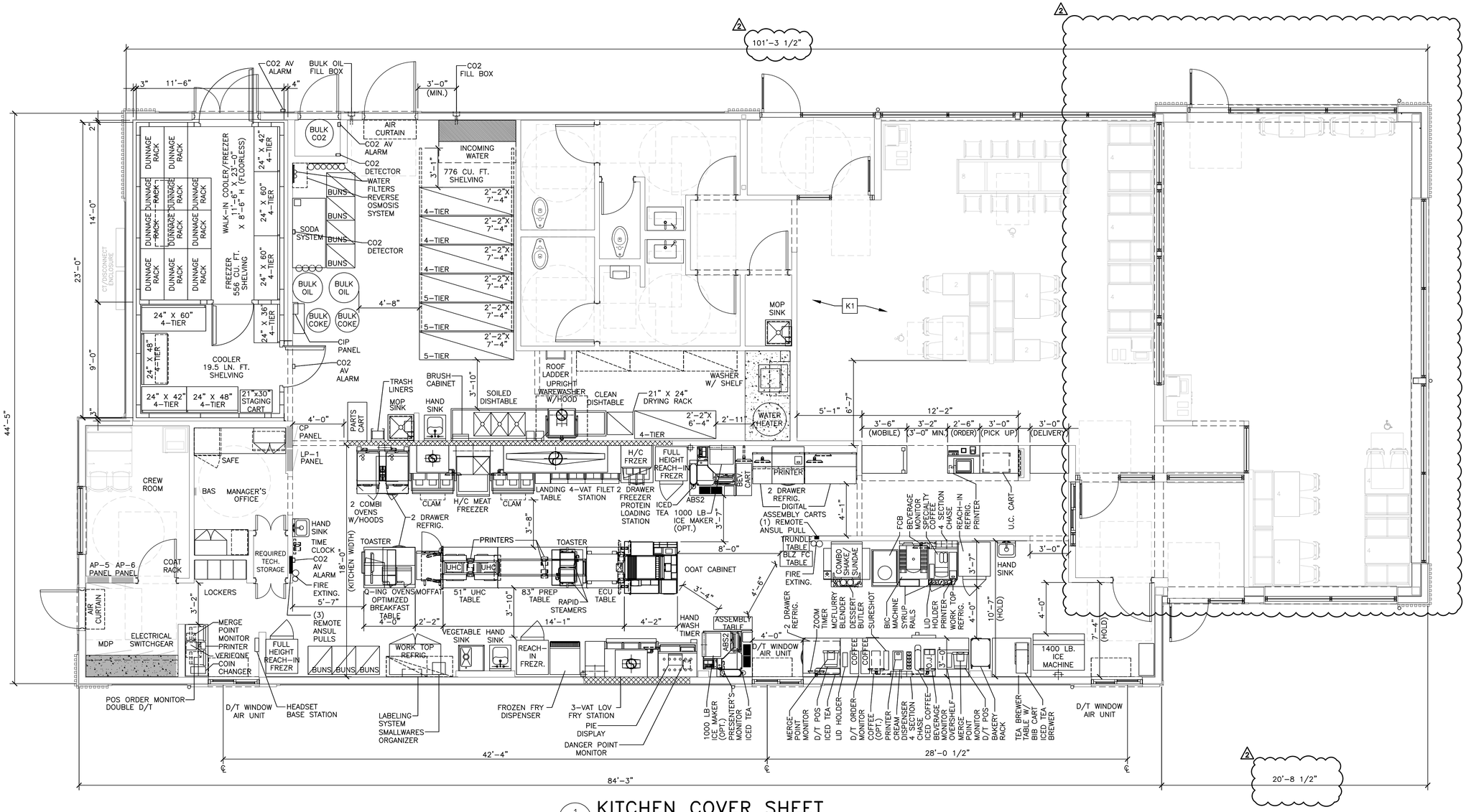

1 K1.0 KITCHEN COVER SHEET

1/4" = 1'-0"

KEYED NOTES

K1 CUSTOMER KIOSK & DECOR LAYOUT FOR REFERENCE ONLY. VERIFY KIOSK PLACEMENT PER USRD APPROVED KIOSK REVIEW

REV	DATE	DESCRIPTION	BY
1	04/08/2025	COUNTY COMMENTS, M.O. OC COMMENTS, & UTILITY COORDINATION	
2	05/09/2025	PLATPLACE ADDITION	

REGISTERED ARCHITECT JEREMY WILLIAMS 17926 STATE OF TEXAS

PREPARED BY:

JAW Architects, Inc.
Jeremy Williams, Architect
Phone: 817.705.3387
Email: jeremy@jaw-arch.com

PREPARED FOR:

McDonald's USA, LLC

© 2025 McDonald's USA, LLC

These drawings and specifications are the confidential and proprietary property of McDonald's USA, LLC and shall not be copied or reproduced without written authorization. The contract documents were prepared for use on the specific site in conjunction with its issue date, and are not suitable for use on other sites or for other purposes. Reproductions of these drawings for reference or example on another project requires the services of properly licensed architects and engineers. Reproductions of the contract documents for reuse on another project is not authorized.

DRAWN BY: JAW
STD ISSUE DATE: 2024
REVIEWED BY: JAW
DATE ISSUED: 10/11/2024

TITLE: 2024 STANDARD BUILDING – BB20 4584-WOOD/WOOD

DESCRIPTION: WOOD BEARING WALLS WITH HARDIE SIDING
WOOD ROOF TRUSS FRAMING
EIFS/BATTEN/METAL/HARDIE SIDING EXTERIOR FINISHES

SITE ID: D42-3591
SITE ADDRESS: NWC OF FM 460 & FM 740, FORNEY TEXAS

SHEET NO.: JAWA 24-0151
K1.0
KITCHEN COVER SHT

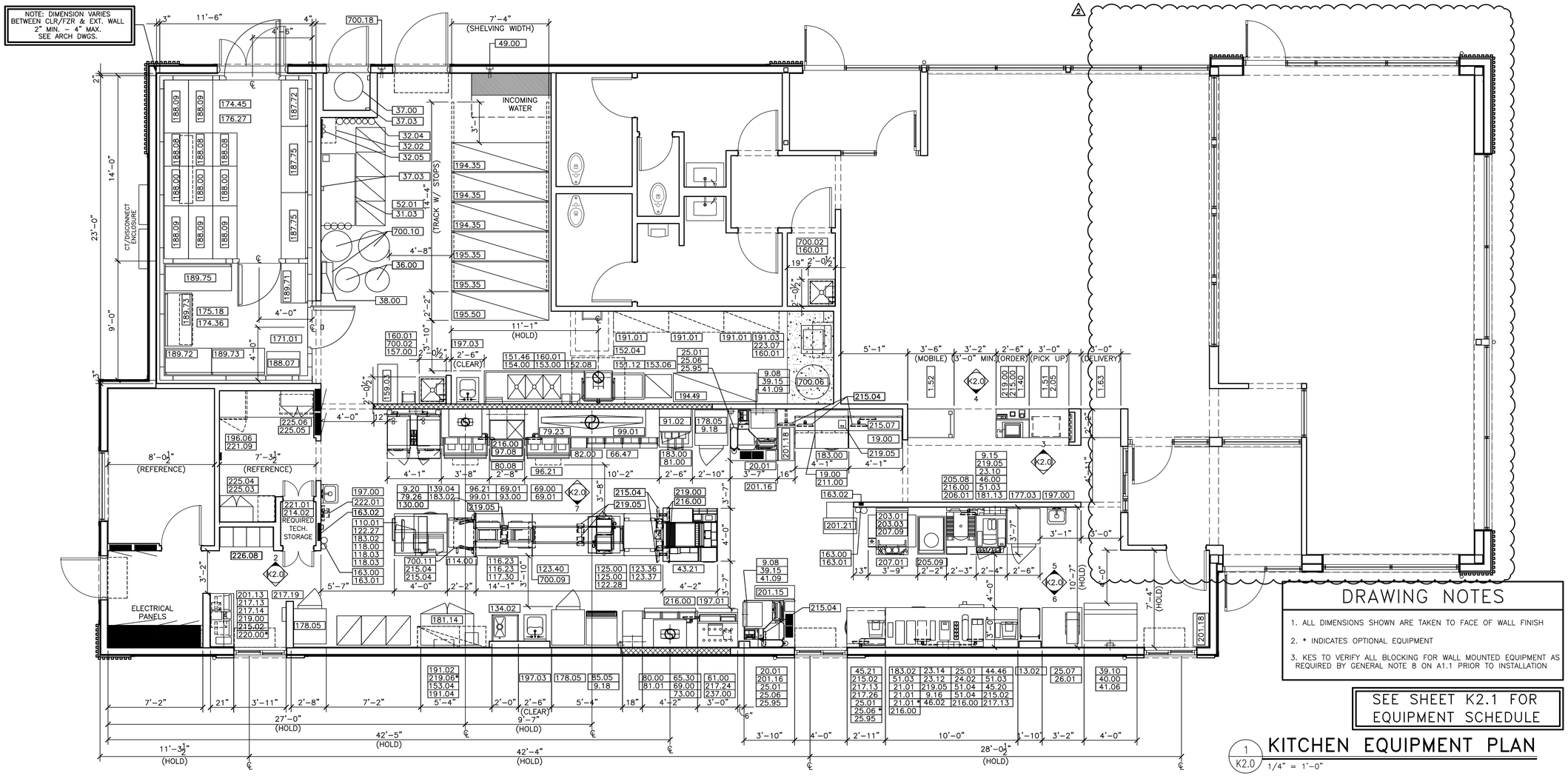

DRAWING NOTES

1. ALL DIMENSIONS SHOWN ARE TAKEN TO FACE OF WALL FINISH
2. * INDICATES OPTIONAL EQUIPMENT
3. KES TO VERIFY ALL BLOCKING FOR WALL MOUNTED EQUIPMENT AS REQUIRED BY GENERAL NOTE 8 ON A1.1 PRIOR TO INSTALLATION

1 / K2.0 KITCHEN EQUIPMENT PLAN
1/4" = 1'-0"

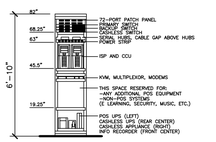

2 / K2.0 COMPUTER CLOSET RACK
1/4" = 1'-0"

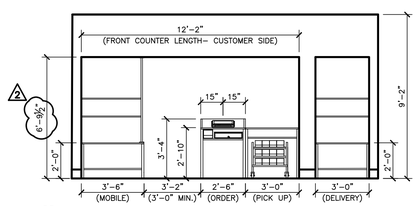

3 / K2.0 FRONT COUNTER
1/4" = 1'-0"

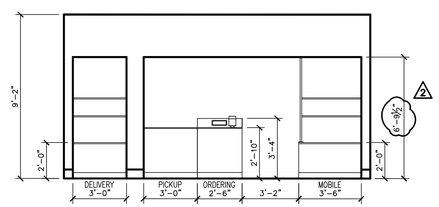

4 / K2.0 FRONT COUNTER ELEVATION
1/4" = 1'-0"

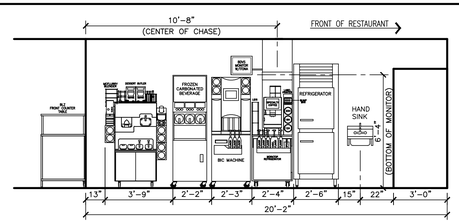

5 / K2.0 BEVERAGE CELL (INTERIOR WALL)
1/4" = 1'-0"

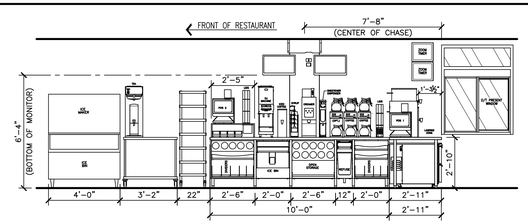

6 / K2.0 BEVERAGE CELL (EXTERIOR WALL)
1/4" = 1'-0"

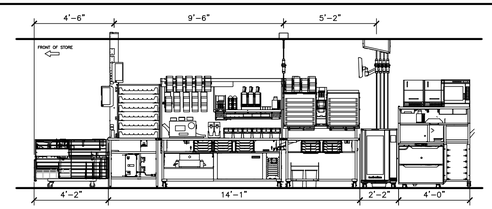

7 / K2.0 COMPACT OPTIMIZED PREP LINE
1/4" = 1'-0"

REV	DATE	DESCRIPTION	BY
1	04/08/2025	COUNTY COMMENTS, M/O OC COMMENTS, & UTILITY COORDINATION	
2	05/09/2025	PLAYPLACE ADDITION	

REGISTERED ARCHITECT JEREMY WILLIAMS 7926 STATE OF TEXAS

JAW Architects, Inc.
Jeremy Williams, Architect
Phone: 817-705-3387
Email: jeremy@jaw-arch.com

PREPARED BY:

PREPARED FOR: McDonald's USA, LLC

© 2025 McDonald's USA, LLC
These drawings and specifications are the confidential and proprietary property of McDonald's USA, LLC and shall not be reproduced without written authorization. The contract documents were prepared for use on this specific site in conjunction with its issue date and are not suitable for use on other projects or sites. Reproduction of these drawings for reference or example on another project requires the services of properly licensed architects and engineers. Reproduction of the contract documents for reuse on another project is not authorized.

DRAWN BY: JAW
STD ISSUE DATE: 2024
REVIEWED BY: JAW
DATE ISSUED: 10/11/2024

TITLE: 2024 STANDARD BUILDING – BB20
4584–WOOD/WOOD

DESCRIPTION: WOOD BEARING WALLS WITH HARDIE SIDING
WOOD ROOF TRUSS FRAMING
EFS/BATTEN/METAL/HARDIE SIDING EXTERIOR FINISHES

SITE ID: 042–3591
SITE ADDRESS: NWC OF FM 460 & FM 740, FORNEY TEXAS

SHEET NO. JAWA 24–0151
K2.0
KITCHEN PLAN

x = Optional Equipment VIF = Verify in Field
GC = General Contractor
R = Relocated Equipment

EQUIPMENT SCHEDULE

ITEM	O	QTY	DESCRIPTION	MANUFACTURER	MODEL #	UL	NSF	FURNISHED	GENERAL REMARKS	SPECIAL REQUIREMENTS
1.40		1	SERVICE POD – 30"	DECOR	SEE PLAN	–	2	GC	–	
1.51		1	PICKUP POD – 36"	DECOR	SEE PLAN	–	2	GC	–	
1.52		1	PICKUP POD – 42"	DECOR	SEE PLAN	–	2	GC	–	
1.63		1	McDELIVERY PICKUP COUNTER	DECOR	SEE PLAN	–	2	GC	–	
2.05		1	UNDER COUNTER CART – 24"W x 18"D FRONT COUNTER	INTERMETRO	UC18–DMS	–	2	KES	–	
9.08		2	UTILITY CHASE – ICE MAKER ON ABS VERSION	KES	5"x8"x23"	–	2	KES	CONCEALS WATER AND CONDENSING UNIT LINES	
9.15		1	UTILITY CHASE – FFDT INTERIOR WALL	KES	20"x5"x76"	–	2	KES	4 SECTION CHASE FOR BUYOUT RECEPTACLES, POS, CO2 AND WATER	
9.16		1	UTILITY CHASE – FFDT EXTERIOR WALL	KES	20"x5"x76"	–	2	KES	4 SECTION CHASE FOR BUYOUT RECEPTACLES, POS AND WATER	
9.18		2	UTILITY CHASE – WALL VERSION	KES	4"x4"x82"	–	2	KES	CHASE FOR BULK OIL LINES, MOUNT AT 2'–0"	
9.20		1	UTILITY CHASE – COMBI CELL	KES	4"x8"x84"	–	2	KES	CHASE FOR BUYOUT RECEPTACLES AND WATER	
13.02		1	BAKERY RACK	KRISPY KREME	18"x26"x65"	–	2	SUPPLIER	–	
19.00		2	DIGITAL ASSEMBLY CART – 48"	INTERMETRO	MCDDAC–48	–	2	KES	–	
20.01		2	AUTOMATED BEVERAGE SYSTEM 2.0	IMI CORNELIUS	621058590LON	–	–	KES	INSTALLATION KIT INCLUDES STAINLESS STEEL CHASE & DATA LINE	
21.01		3	COFFEE BREWER (THERMAL POTS)	BUNN–O– MATIC	AXIOM–DV–3	E32066	4	KES	W/ELECTRONIC CONTROLLER FOR CONVERSION TO LOW OR HIGH VOLTAGE	
23.10		1	ESPRESSO BREWER	FRANKE	FM850	–	4	KES	–	
23.12		1	COFFEE CREAM DISPENSER	SURESHOT	AC110–PC–51	E217698	20	KES	–	
23.14		1	SUGAR/SWEETENER DISPENSER	SURESHOT	AC2–GP–1–G38	E217698	18	KES	–	
24.02		1	JUICE DISPENSER	BUNN–O– MATIC	JDF–2S	–	18	KES	–	
25.01		4	SLIMLINE ICED BEVERAGE DISPENSER	BUNN–O– MATIC	TDO–N	E32066	4	KES	KES TO VERIFY EXACT QUANTITY PER MARKET	
25.06		3	SLIMLINE ICED BEVERAGE DISPENSER – SHORT	BUNN–O– MATIC	TDO–N LP	E32066	4	KES	KES TO VERIFY EXACT QUANTITY PER MARKET	
25.07		1	INFUSION TEA BREWER – MIS	BUNN–O– MATIC	ITCB–DV	E32066	4	KES	PROVIDED WITH BREWER, INSTALLATION KIT AND TDO–N BOOSTER	
25.95		3	SLIMLINE ICED BEVERAGE DISPENSER – 2 TIER STAND	KES	–	–	2	KES	–	
26.01		1	TEA BREWER TABLE – 36"X36"	ISS SHELVING	WST1758C	–	2	KES	–	
31.03		1	SODA SYSTEM PACKAGE B.I.B.(RECIRCULATING– 3 TOWERS) – REMOTE	MULTIPLEX	50MR04	SA4632	18	KES	–	
32.02		1	REVERSE OSMOSIS WATER FILTRATION SYSTEM – TANKLESS	EVERPURE	MRS–600HE	–	–	KES	FOR COFFEE MAKER, ESPRESSO MACHINE, AND RAPID BUN STEAMER	
32.04		1	WATER FILTRATION SYSTEM	EVERPURE	EV9337–26	–	–	KES	–	
32.05		1	WATER FILTRATION SYSTEM	EVERPURE	EV9272–24	–	–	KES	FOR COMBI OVENS AND STAGING CABINET	
36.00		2	BULK COKE	CHART INDUSTRIES	10667511	–	18	MANU–FACTURER	SYRUP LINES BY CHART INDUSTRIES	
37.00		1	BULK CO2 – 750 LB.	CHART INDUSTRIES	CARBO–MAX 750	–	–	MANU–FACTURER	–	
37.03		2	CO2 SAFETY SYSTEM	SEE RMKS	–	–	–	KES	SEE MECHANICAL DRAWINGS	INCLUDES DETECTOR AND (4) AV ALARMS
38.00		1	CLEAN IN PLACE PANEL	CHART INDUSTRIES	10667431	–	18	MANU–FACTURER	MOUNT 6"W x 7"H. BOX @ 6'–0" AFF TO BOX CENTER LINE	
39.10		1	ICE MACHINE – 1400 LB.	MANITOWOC	IYT1500N3/ D970	SA4027	12	KES	USE HEADMASTER KIT K00221	
39.15		2	ICE MACHINE – 1000 LB.	MANITOWOC	IBT1020C–161	SA4027	12	KES	CONDENSER: CVDT1200	
40.00		1	ICE MACHINE CHASE	KES	4"x6"x48"	–	2	KES	CONCEALS WATER AND CONDENSING UNIT LINES	
41.06		1	ICE MACHINE REMOTE CONDENSER – 1400 LB.	MANITOWOC	JCT–1500	SA4027	12	KES	–	
41.09		2	ICE MACHINE REMOTE CONDENSER – 1000 LB.	MANITOWOC	CVDT1200–263A	SA4027	12	KES	–	
43.21		1	OPTIMIZED ORDER ASSEMBLY TABLE	KES	90001	E152097	2	KES	–	
44.46		1	SMALL RISER SHELF – 18" TO 30"	FRANKE	18006010	–	2	KES	–	
45.20		1	MODULAR BEVERAGE CABINET – 10'–0"	KES	–	–	2	KES	–	
45.21		1	BEVERAGE CABINET – DRIVE–THRU TABLE 35"	KES	–	–	2	KES	–	
46.00		1	CUP DISPENSER VERTICAL 3 CUP	KES	–	–	2	KES	–	
46.02		1	SYRUP BOTTLE RACK – (5) SYRUP PUMPS	PRONTO	–	–	2	KES	–	
49.00		1	CO2 FILL BOX – 6 1/2"W x 18"H	CHART INDUSTRIES	8512629	–	–	MANU–FACTURER	SEE EXTERIOR ELEVATIONS FOR MOUNTING HEIGHT, INSTALLED BY GC	
51.03		3	CUP LID HOLDER 3 HIGH S/S	KES	–	–	2	KES	–	
51.04		2	CUP LID HOLDER SINGLE STACK 8" HIGH	KES	–	–	2	KES	–	
52.01		1	REMOTE CONDENSING UNIT – 50MR04	MULTIPLEX	TS–0895	SA2298	–	KES	ORDER PRE–CHARGE LINE #204017 – VIF LENGTH FROM UNIT TO SODA SYST.	
61.00		1	FRY BAGGING STATION 36"	KES	FB25A	E99018	2	KES	–	
65.30		1	3–VAT LOV FRYER – ELECTRIC – F/F/F	HENNY PENNY	LVE–203	E30993	4	KES	–	IDLE ENERGY RATE=0.73kW, ENERGY EFFICIENCY=87%
66.47		1	4–VAT LOV FRYER – ELECTRIC – S/S/S/S	HENNY PENNY	LVE–204	E30993	4	KES	–	IDLE ENERGY RATE=0.73kW, ENERGY EFFICIENCY=87%
69.00		2	CAPTURE JET PLENUM – FRYER	HALTON	CJP–F	MH27607	2	KES	ATTACH TO UNIVERSAL EXHAUST HOOD	
69.01		2	CAPTURE JET PLENUM – GRILL	HALTON	CJP–G	MH27607	2	KES	ATTACH TO UNIVERSAL EXHAUST HOOD	
73.00		1	UNIVERSAL EXHAUST HOOD 3–VAT FRYER	KES	UH–50	MH12755	2	KES	–	
79.23		1	UNIVERSAL EXHAUST HOOD FULL–CLAM/4–VAT FRYER	KES	UH–122	MH12755	2	KES	–	
79.26		2	VENTLESS HOOD FOR COMBI OVEN	CONVOTHERM	CONOVENT MINI 6.10	E325060	2	KES	–	
80.00		1	MECHANICAL CHASE	KES	9"x18" SGCL.	E163328	2	KES	–	
80.08		1	MECHANICAL CHASE	KES	9"x32" SGCL.	E163328	2	KES	–	
81.00		1	PROTEIN LOADING STATION KIT	KES	272436	–	2	KES	–	
81.01		1	PRODUCT LANDING SHELF – SOLID TOP	KES	–	–	2	KES	–	
82.00		1	LANDING TABLE	INTERMETRO	TLDP–S	–	2	KES	–	
85.05		1	FROZEN FRY DISPENSER	RAM	280–FP	E140753	4	KES	–	
91.02		1	WALL MOUNT FREEZER UNIT–SINGLE WIDE–HIGH CAPACITY	KES	HCWF1	SA7329	7	KES	AIR–COOLED, SELF–CONTAINED – MOUNT BOTTOM AT 51" AFF	HCWF1.99A INSTALL HARDWARE KIT REQUIRED
93.00		1	UNIVERSAL EXHAUST HOOD FULL–CLAM GRILL	KES	UH–43	MH12755	2	KES	–	
96.21		2	36" NEXT GEN 3–PLATEN CLAMSHELL GRILL – ELECTRIC	GARLAND	ME–3PX	E28898	4	KES	–	
97.08		1	MEAT FREEZER – DOUBLE WIDE – HIGH CAPACITY – RIGHT HAND	KES	HCMF30B–RH	SA6032 S	2	KES	AIR–COOLED, SELF–CONTAINED	
99.01		2	GRILL TOOL ORGANIZER – 43" HOOD	KES	–	–	2	KES	–	
110.01		1	OPTIMIZED BREAKFAST TABLE	KES	GBT	–	2	KES	–	
114.00		1	HUMIDIFIED HOLDING CABINET	MOFFAT	HP10T–LMD	197	4	KES	–	
116.23		2	UNIVERSAL HOLDING CABINET – HIGH DENSITY – 2–SIDED – PIN & SLEEVE	FRYMASTER	UHCHD6T	E44571	4	KES	–	
117.30		1	UHC TABLE COPL – 2 SIDED – 51"D x 34"W – PIN&SLEEVE	KES	91011	–	2	KES	–	
118.00		1	Q'ING OVEN – PIN & SLEEVE	AMANA	MC23MPW2	E40456	4	KES	–	
118.03		2	Q'ING OVEN – PIN & SLEEVE	ACP	MCMOC24	–	4	KES	–	
122.27		1	NEXT GEN. UNIVERSAL RADIANT TOASTER – PIN & SLEEVE	ANTUNES	HRT–5H	–	4	KES	–	
122.28		1	NEXT GEN. UNIVERSAL CONTACT TOASTER – PIN & SLEEVE	ANTUNES	HCT–5H	–	4	KES	–	
123.36		1	ECU TABLE – COPL	KES	90165	–	2	KES	–	
123.37		1	BREAKER PANEL– 125 AMP – 1 PHASE – EQUIPMENT MOUNTED	KES	–	–	–	KES	–	
123.40		1	PREP TABLE – HD – 2–SIDED COPL – 38"D x 83 1/2" – PIN & SLEEVE W/REF.	KES	91010	–	2	KES	–	
125.00		2	RAPID BUN STEAMER	PRINCE CASTLE	625–MFY	–	4	KES	–	
130.00		2	COMBI OVEN	CONVOTHERM	MS6102083LCMD1	E360598	4	KES	–	0.89kW, 69% STEAM MODE, 0.61kW, 81% CONVECTION MODE
134.02		1	VEGETABLE SINK	KES	SK04–4	–	2	KES	–	
139.04		1	COMBI OVEN STAND – DOUBLE WIDE	KES	–	–	2	KES	–	
151.12		1	CLEAN DISHTABLE – LEFT HAND – 28.23"	KES	SK–SPL	–	2	KES	–	
151.46		1	SOILED DISHTABLE – RIGHT HAND – 90.5" WIDE	KES	SK–SPL	–	2	KES	–	
152.04		1	WAREWASHER HOOD	KES	–		3		TYPE 2 HOOD FOR NON GREASE APPLICATION – REQUIRED PER CODE	
152.08		1	WAREWASHER – HIGH TEMP	HOBART	AM16SVLT–1		3	MANU–FACTURER	–	
153.00		1	SCULLERY SHELVING KIT – 3 TIER – 14" x 36"	INTERMETRO	SHSS–4	–	2	KES	–	
153.04		1	SMALLWARE WALL ORGANIZER	INTERMETRO	SW1812–MPS	–	2	KES	–	
153.06		1	REUSABLE DRYING RACK	INTERMETRO	MCD2124–DRY6	–	2	KES	–	
154.00		1	BRUSH CABINET	KES	8047	–	4	KES	–	
157.00		1	TRASH LINER DISPENSER SHELF	KES	A0053	–	2	KES	–	
159.03		1	UNIVERSAL PARTS CART – 36" W	INTERMETRO	MCD–1836UPC	–	2	KES	–	
160.01		4	CHEMICAL SYSTEM	ECOLAB	–	–	–	MANU–FACTURER	–	
163.00		2	FIRE EXTINGUISHER – 5 LB. – ABC	ANSUL	SEE RMKS	–	–	SEE RMKS	LOCAL ANSUL AGENT SPECIFIES, SUPPLIES & LOCATES PER LOCAL CODE	
163.01		2	FIRE EXTINGUISHER – 6 L. – K GUARD	ANSUL	SEE RMKS	–	–	SEE RMKS	LOCAL ANSUL AGENT SPECIFIES, SUPPLIES & LOCATES PER LOCAL CODE	
163.02		4	REMOTE ANSUL PULL	ANSUL	4835	EX3470	–	SEE RMKS	CODE MAY REQUIRE LOCAL ANSUL AGENT TO SUPPLY	
171.01		1	WALK–IN COOLER / FREEZER FLOORLESS	NORLAKE	–	E42763	7	KES	–	
174.36		1	REMOTE CONDENSING UNIT	BOHN	BCH0010MBACZC0225	SA4272	–	KES	BEACON II/INTELLIGEN SYSTEM	
174.45		1	REMOTE CONDENSING UNIT	BOHN	BCH0055LCACZC0225	SA4272	–	KES	BEACON II/INTELLIGEN SYSTEM	
175.18		1	COOLER EVAPORATOR	BOHN	BEL0095BS6AMAD0096	SA1525	–	KES	INTELLIGEN EVAPORATOR	
176.27		1	FREEZER EVAPORATOR	BOHN	BEL0170BS6EEAD0096	SA1525	–	KES	INTELLIGEN EVAPORATOR	
177.03		1	REACH–IN REFRIGERATOR–SINGLE WIDE	BEVERAGE AIR	HR1HC–1HS	SA2651	7	KES	–	
178.05		3	REACH–IN FREEZER – SINGLE WIDE	BEVERAGE AIR	HF1HC–1HS	SA2651	7	KES	–	
181.13		1	REFRIGERATOR – SPECIALTY COFFEE– 27" WIDE	TRUE	TUC–27 MCDCF1	SA33040	7	KES	RIGHT–HAND HINGED	
181.14		1	REFRIGERATOR – WORKTOP – 48" WIDE	TRUE	TWT–48 MCD1	SA4065	7	KES	–	

x = Optional Equipment VIF = Verify in Field
GC = General Contractor
R = Relocated Equipment

EQUIPMENT SCHEDULE

ITEM	O	QTY	DESCRIPTION	MANUFACTURER	MODEL #	UL	NSF	FURNISHED	GENERAL REMARKS	SPECIAL REQUIREMENTS
183.00		2	REFRIGERATOR/FREEZER – 2 DRAWER BASE – 30" W X 33" H	KES	18012498	SA4044	7	KES	–	
183.02		3	REFRIGERATOR/FREEZER – 2 DRAWER BASE – 30" W X 30" H	KES	18021304	SA4044	7	KES	–	
187.72		1	FREEZER SHELVING 24" x 42" x 74" H. – 4–TIER	ISS SHELVING	FSMS/FSMA742442E	–	2	KES	–	
187.75		2	FREEZER SHELVING 24" x 60" x 74" H. – 4–TIER	ISS SHELVING	FSMS/FSMA742460E	–	2	KES	–	
188.00		3	DUNNAGE RACK 22" x 36"	INTERMETRO	HP2236PD	–	2	KES	–	
188.07		1	UNIVERSAL STAGING CART	ISS SHELVING	WST1384Y	–	2	KES	–	
188.08		3	DUNNAGE RACK 22" x 30"	INTERMETRO	HP2230PD	–	2	KES	–	
188.09		5	DUNNAGE RACK 22" x 48"	INTERMETRO	HP2248PD	–	2	KES	–	
189.71		1	COOLER SHELVING 24" x 36" x 74" H. – 4–TIER	ISS SHELVING	FSMS/FSMA742436E	–	2	KES	–	
189.72		1	COOLER SHELVING 24" x 42" x 74" H. – 4–TIER	ISS SHELVING	FSMS/FSMA742442E	–	2	KES	–	
189.73		2	COOLER SHELVING 24" x 48" x 74" H. – 4–TIER	ISS SHELVING	FSMS/FSMA742448E	–	2	KES	–	
189.75		1	COOLER SHELVING 24" x 60" x 74" H. – 4–TIER	ISS SHELVING	FSMS/FSMA742460E	–	2	KES	–	
191.01		3	VALANCE SHELVING – 18" x 48"	INTERMETRO	M1848C–MP	–	2	KES	MOUNT AT 6'–8"AFF TO SHELF BOTTOM UNLESS OTHERWISE NOTED	
191.02		1	VALANCE SHELVING – 18" x 60"	INTERMETRO	M1860C–MP	–	2	KES	MOUNT AT 6'–8"AFF TO SHELF BOTTOM UNLESS OTHERWISE NOTED	
191.03		1	VALANCE SHELVING – 18" x 30"	INTERMETRO	M1830C–MP	–	2	KES	MOUNT AT 5'–0"AFF TO SHELF BOTTOM FOR ABOVE WASHER APPLICATION	
191.04		1	VALANCE SHELVING – 18" x 36"	INTERMETRO	M1836C–MP	–	2	KES	MOUNT AT 5'–0"AFF TO SHELF BOTTOM –W/ST STL LINER FOR SALAD EQUIP	
194.35		3	DRY SHELVING 26" x 88" x 84" H.– 4–TIER – MOBILE	DENSTOR	–	–	2	KES	–	
194.49		1	DRY SHELVING 26" x 76" x 84" H.– 4–TIER – FIXED	DENSTOR	–	–	2	KES	–	
195.35		2	DRY SHELVING 26" x 88" x 84" H.– 5–TIER – MOBILE	DENSTOR	–	–	2	KES	–	
195.50		1	DRY SHELVING 26" x 88" x 84" H.– 5–TIER – FIXED	DENSTOR	–	–	2	KES	–	
196.06		1	SAFE – STANDARD BLDG. – LEFT HINGE	NKL	BSD4125FGXL–MC	–	–	OWNER	–	
197.00		2	STAINLESS STEEL HAND SINK	ADVANCE TABCO	7–PS–61	–	2	GC	REFER TO PLUMB. DWGS. FOR DETAILS, SOAP & TOWEL DISP. BY OTHERS	PROVIDE SIDE SPLASHES (7–PS–11) WHEN REQUIRED BY LOCAL CODE
197.01		1	HAND WASH TIMER	NATIONAL CONTROLS	TMD–T1715–120	E53595	–	KES	–	
197.03		2	STAINLESS STEEL HAND SINK – ADA	ADVANCE TABCO	7–PS–26	–	2	GC	REFER TO PLUMB. DWGS. FOR DETAILS, SOAP & TOWEL DISP. BY OTHERS	PROVIDE SIDE SPLASHES (7–PS–11D) WHEN REQUIRED BY LOCAL CODE
201.13		1	DRIVE–THRU CASH STAND – 21" D x 48" W	INTERMETRO	DT48–8	–	2	KES	SOLID WORK TOP, WIRE SHELVES	
201.15		1	READY NEXT DRIVE–THRU ASSEMBLY CART – 12" D x 36" W	INTERMETRO	DTPC–36	–	2	KES	–	
201.16		2	DRIVE–THRU ABS CART	KES	–	–	2	KES	ABS DRINK STAGING CART WITH TROUGH	
201.18		2	CBB STAGING CART	INTERMETRO	MCD–CBB	–	2	KES	–	
201.21		1	BLZ FRONT COUNTER TABLE – 30" D x 14" W	INTERMETRO	MCD1430–BLZM	–	2	KES	W/ CASTERS AND OVERSHELF	
203.01		1	HEAT TREAT COMBINATION SHAKE/SUNDAE MACHINE	CARPIGIANNI	K3	SA4203	6	KES	SUPPLIED WITH CONE DISPENSER AND 7'–6" LONG CORD	
203.03		2	CUP/CONE DISPENSER	KES	–	–	2	KES	–	
205.08		1	BIC MACHINE	MULTPLEX	MA–8–2	SA12070	6	KES	–	
205.09		1	FROZEN BEVERAGE DISPENSER	IMI CORNELIUS	VIPER 3	SA2128	6	KES	–	
206.01		1	SPECIALTY BEVERAGE STANDOFF SHELF	KES	KES	–	2	KES	MOUNT SHELF @ 2'–6" AFF	
207.01		1	BLENDER – RAIL MOUNT – MCFLURRY	VITAMIX	056385	–	8	KES	SUPPLIED MOUNTING BRACKETS	
207.09		1	DESSERT BUTLER	KES	–	–	2	KES	–	–
211.00		1	DELIVERY TABLET	APPLE	IPAD	–	–	DELIVERY PARTNER	QUANTITY DEPENDENT UPON NUMBER OF DELIVERY PARTNERS	
214.02		1	TECHNOLOGY RACK	BY OWNER	BY OWNER	OEM	–	OWNER	V.I.F. EXACT LOCATION FOR NETWORK RACK	
215.00		1	POS REGISTER – FRONT COUNTER	BY OWNER	BY OWNER	OEM	–	OWNER	INCLUDES MONITOR AND CPU	
215.02		4	POS REGISTER – 2 WINDOW D/T	BY OWNER	BY OWNER	OEM	–	OWNER	INCLUDES MONITOR AND CPU	
215.04		8	POS – KVS MONITOR	BY OWNER	BY OWNER	OEM	–	OWNER	–	
215.07		1	POS REGISTER – DELIVERY	BY OWNER	BY OWNER	OEM	–	OWNER	–	
216.00		8	POS – VIDEO MONITOR	BY OWNER	BY OWNER	E106786	–	OWNER	SUPPORTS INSTALLED BY GC IF REQUIRED – MOUNT @ 5'–8" AFF	FOR APPLICATIONS ABOVE ABS, MOUNT AT 6'–6" AFF
217.13		3	MERGE POINT MONITOR (DOUBLE DRIVE–THRU)	BY OWNER	BY OWNER	–	–	OWNER	MONITORS ARE REQUIRED FOR SIDE BY SIDE DRIVE THRU SYSTEM	–
217.14		1	POS – ORDER MONITOR (DOUBLE DRIVE THRU)	BY OWNER	BY OWNER	E106786	–	OWNER	SUPPORTS INSTALLED BY GC IF REQUIRED – MOUNT @ 5'–8" AFF	
217.19		1	WIRELESS HEADSET BASE STATION	HME	NEXEO HDX	–	–	OWNER	–	
217.24		1	DANGER POINT MONITOR (DOUBLE DRIVE–THRU)	BY OWNER	BY OWNER	–	–	OWNER	MONITORS ARE REQUIRED FOR SIDE BY SIDE DRIVE THRU SYSTEM	
217.26		1	ZOOM TIMER	HME	ZOOM NITRO	–	–	OWNER	–	
219.00		4	POS – RECEIPT PRINTER	BY OWNER	BY OWNER	OEM	–	OWNER	–	
219.05		7	STICKY LABEL PRINTER	BY OWNER	BYOWNER	OEM	–	OWNER	–	–
219.06		1	LABELING SYSTEM	TRANSACT	9700	–	–	KES	–	
220.00		1	POS – COIN DISPENSER	BY OWNER	BY OWNER	OEM	–	OWNER	–	
221.01		1	POS – OFFICE	BY OWNER	BY OWNER	OEM	–	OWNER	–	
221.09		1	O/O EQUIPMENT RACK	TRIPP–LITE	SRW12USDP	–	–	OWNER	AVAILABLE THROUGH POS SUPPLIER	
222.01		1	TIME CLOCK	BY OWNER	BY OWNER	OEM	–	OWNER	–	
223.07		1	WASHER – ELECTRIC	WHIRLPOOL	CAE27938Q	–	–	KES	–	
225.03		1	OFFICE PACKAGE/DESK UNIT	DENSTOR	2000–0100	–	–	KES	WORK SURFACE 75", (1) DESK PEDESTAL W/ 2 DRAWERS AND (1) PEDESTAL W/ 3 DRAWERS	
225.04		1	OFFICE PACKAGE/ 2–WALL CABINETS	DENSTOR	2000–0200	–	–	KES	–	
225.05		1	OFFICE PACKAGE/HIGH WORK SURFACE	DENSTOR	2000–0300	–	–	KES	W/ (6) L–BRACKETS – WORK SURFACE IS 75" W. – CUT IN FIELD IF REQUIRED	
225.06		1	OFFICE PACKAGE W/3 DRAWER LATERAL FILE	DENSTOR	2000–0400	–	–	KES	–	
226.08		4	CREW LOCKERS –12" x 12" x 18" (6 HIGH)	DENSTOR	3–121278	–	2	KES	–	
237.00		1	PIE DISPLAY	PRINCE CASTLE	524–MCDC	E341354	4	KES	PROVIDE WITH S/S PANEL	
700.02		2	MOP SINK	GC	–	–	2	GC	–	
700.06		1	WATER HEATER – ELECTRIC – 54KW	GC	SEE RMKS	–	2	GC	REFER TO PLUMB. DWGS. FOR DETAILS	
700.09		1	ECONOMY OEP BOX W/MOUNTING HARDWARE	ACS	OEP–6	E71309	–	KES	6" W. x 24" D.	
700.10	X	1	BULK OIL SYSTEM	RTI	BI–3F	SEE RMKS	4	MANU–FACTURER	IF AVAILABLE IN MARKET – ETL ELECTRICAL RATING: 990O762	
700.11		1	OEP UTILITY PANEL W/ MOUNTING HARDWARE – STATIC BOX	H&K DALLAS	–	–	–	H&K DALLAS	2'–4"x2'–4" x4" HIGH BOX	
700.18	X	1	BULK OIL FILL BOX – 8"Wx10"H	RTI	–	–	–	MANU–FACTURER	SEE EXTERIOR ELEVATIONS FOR MOUNTING HEIGHT, INSTALLED BY GC	

SEE SHEET K2.0 FOR EQUIPMENT LAYOUT AND TAG IDENTIFICATION

1 / K2.1 KITCHEN SCHEDULE

REV	DATE	DESCRIPTION	BY
1	04/08/2025	COUNTY COMMENTS, M/O, GC COMMENTS, & UTILITY COORDINATION	

REGISTERED ARCHITECT JEREMY WILLIAMS 7926 STATE OF TEXAS

JAW Architects, Inc.
Jeremy Williams, Architect
Phone: 817.705.5387
Email: jeremy@jaw-arch.com

PREPARED BY:

© 2025 McDonald's USA, LLC

PREPARED FOR: McDonald's USA, LLC

These drawings and specifications are the confidential and proprietary property of McDonald's USA, LLC and shall not be reproduced or used without written authorization. The contract documents were prepared for use on this specific site in conjunction with its issue date and are not to be used at any other location or at a later date. Any other project requires the these drawings for reference or example on another project requires the services of properly licensed architects and engineers. Reproduction of this construct documents for reuse on other projects is not authorized.

DRAWN BY: JAW | STD ISSUE DATE: 2024
REVIEWED BY: JAW | DATE ISSUED: 10/11/2024

TITLE: 2024 STANDARD BUILDING – BB20 4584–WOOD/WOOD

DESCRIPTION: WOOD BEARING WALLS WITH HARDIE SIDING; WOOD ROOF TRUSS FRAMING; EFS/BATTEN/METAL/HARDIE SIDING EXTERIOR FINISHES

SITE ID: 042–3591
SITE ADDRESS: NWC OF FM 460 & FM 740, FORNEY TEXAS

SHEET NO. JAWA 24–0151
K2.1
KITCHEN SCHEDULE