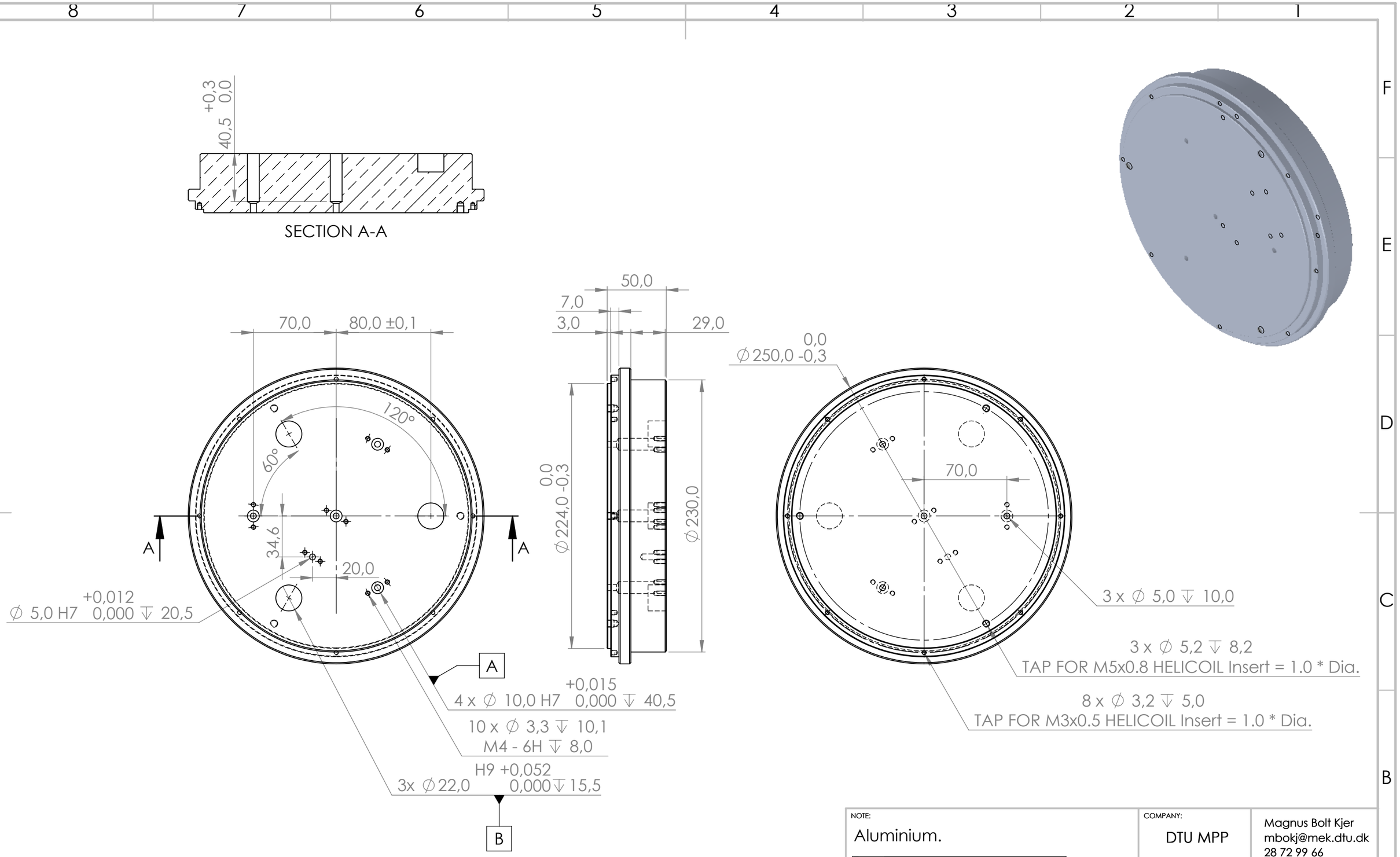

NOTE:

Aluminium.

A	Hul til varmeelement
B	Hul til spændelement

MATERIAL: 3.3315 (EN-AW 5005) WEIGHT [g]: 5756.7

FINISH:

DRAWN	MBOKJ
DATE	01/12/2021

COMPANY: DTU MPP

Magnus Bolt Kjer
mbokj@mek.dtu.dk
28 72 99 66

TITLE/DESCRIPTION:

ByggeBase

UNLESS OTHERWISE SPECIFIED:
DIMENSIONS ARE IN MILLIMETERS
TOLERANCES: DIN ISO 2768-1 m

DEBURR AND BREAK SHARP EDGES

A3

DO NOT SCALE DRAWING

SCALE:1:3

SHEET 1 OF 1