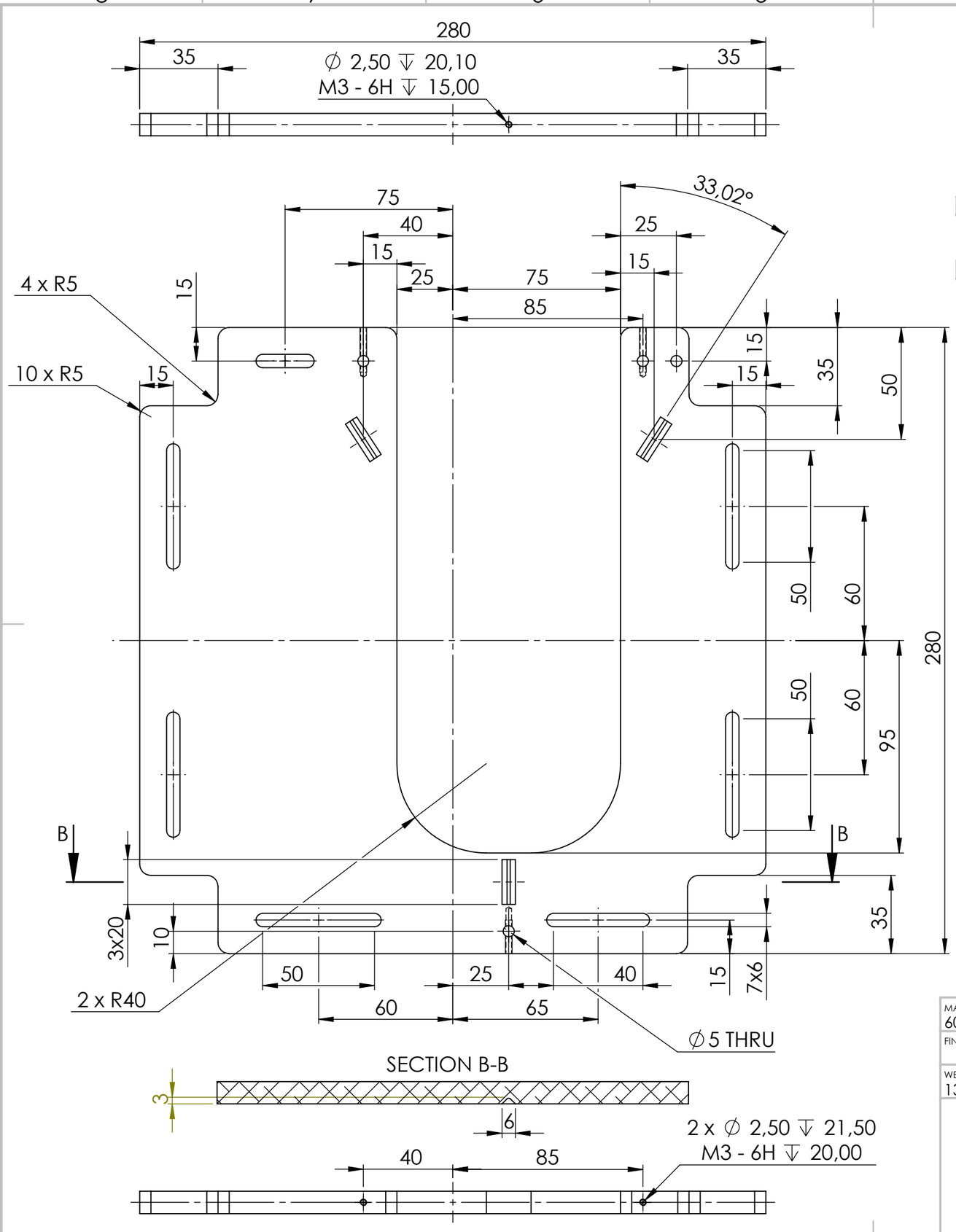

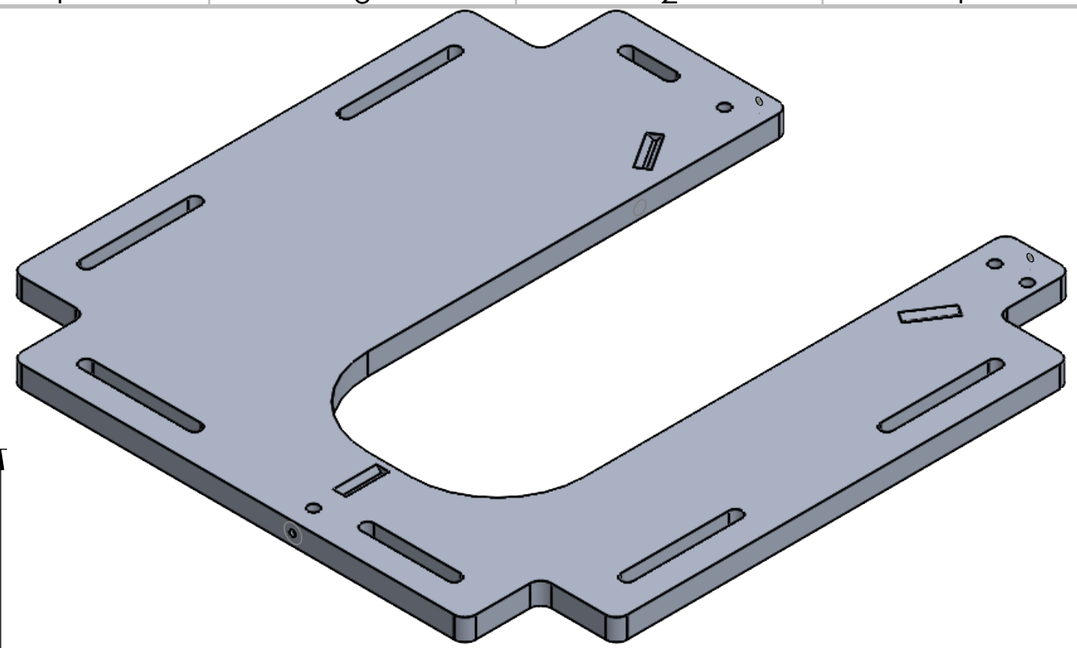

UNLESS OTHERWISE SPECIFIED:
DIMENSIONS ARE IN MILLIMETERS

DEBURR AND BREAK SHARP EDGES

TOLERANCE:
DIN ISO 2768-1 m

MATERIAL: 6061-T6 (SS)	COMPANY:	PROJECT: Baby Amanda
FINISH:		
WEIGHT [g]: 1308.48	NOTE:	TITLE/DESCRIPTION:
DTU	NAME / DATE / SIGNATURE	DRAWING NO.: Projector_BASE_Bottom
	DRAWN	
	CHECKED	
	APPROVED	
	PROJECTION	REVISION:
	DO NOT SCALE DRAWING	A3
	SCALE: 1:2	SHEET 1 OF 1

SOLIDWORKS Educational Product. For Instructional Use Only.