ESP32

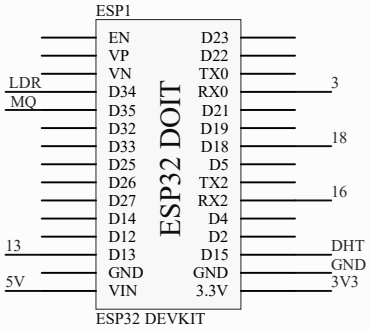

MQ2 Module

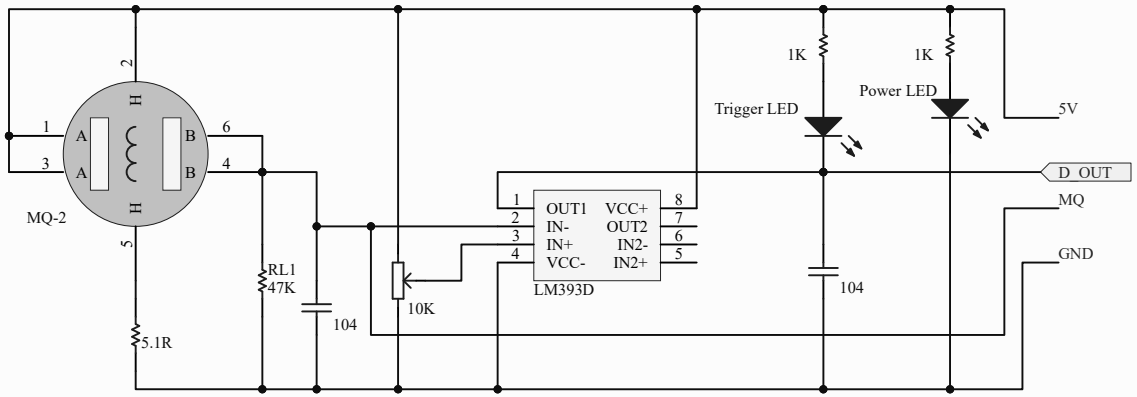

LDR Module

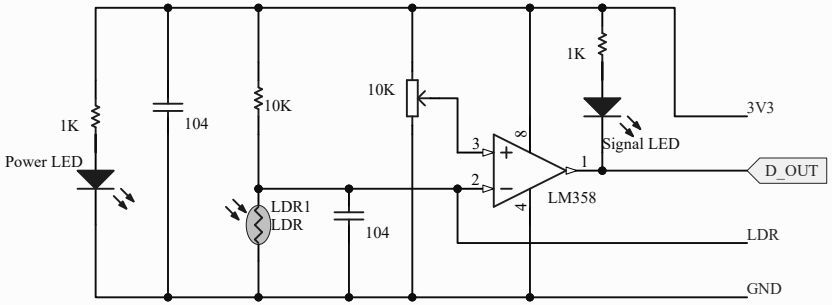

DHT11

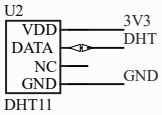

LED TEST

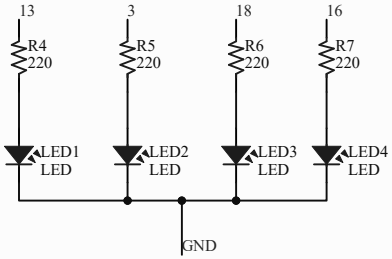

Title *Connection Diagrams (Smart Home)*	Teacher	Students
Subject: IoT architecture and protocol labs	**Trương Quang Phúc**	**Nguyễn Nhật Duy - 21139011** **Nguyễn Tài Như Tâm - 21139053**
Date: 19/11/2023		