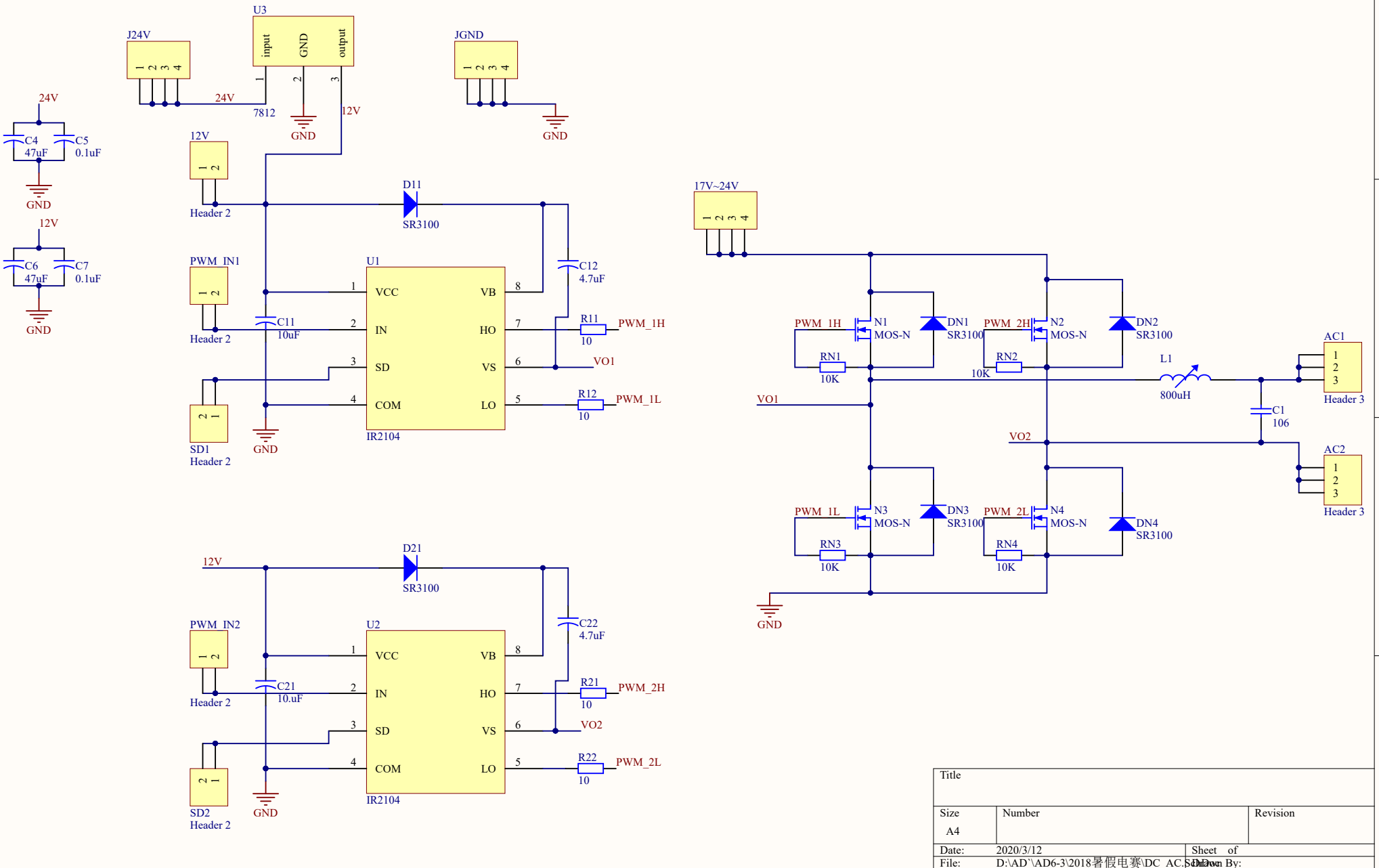
U3
input
GND
output
J24V
JGND
24V
7812
12V
GND
C4
47uF
C5
0.1uF
C6
47uF
C7
0.1uF
Header 2
D11
SR3100
PWM_IN1
U1
VCC
IN
SD
COM
VB
HO
VS
LO
IR2104
C11
10uF
C12
4.7uF
R11
10
R12
10
PWM_1H
VO1
PWM_1L
SD1
D21
PWM_IN2
U2
C21
10.uF
C22
4.7uF
R21
R22
PWM_2H
VO2
PWM_2L
SD2
17V~24V
N1
MOS-N
DN1
SR3100
N2
DN2
N3
DN3
N4
DN4
RN1
RN2
RN3
RN4
10K
L1
800uH
C1
106
AC1
AC2
Header 3
Title
Size
A4
Number
Revision
Date:
2020/3/12
Sheet of
File:
D:\AD\AD6-3\2018暑假电赛\DC_AC.SchDoc
Drawn By: