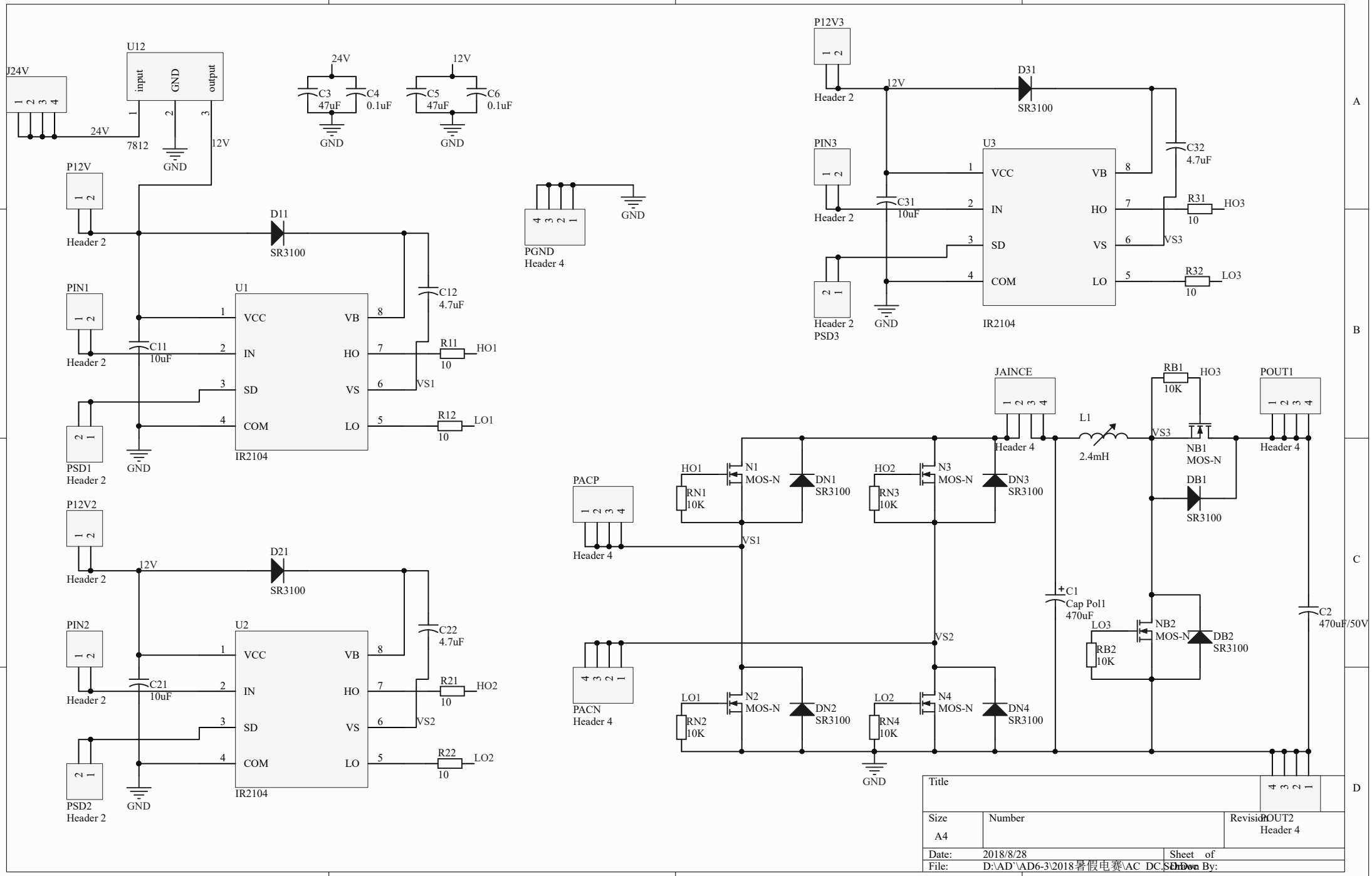
U12
J24V
input
GND
output
24V
7812
12V
GND
24V
C3
47uF
C4
0.1uF
12V
C5
47uF
C6
0.1uF
P12V
Header 2
D11
SR3100
PIN1
U1
VCC
IN
SD
COM
VB
HO
VS
LO
C11
10uF
C12
4.7uF
R11
10
HO1
VS1
R12
10
LO1
PSD1
Header 2
IR2104
PGND
Header 4
P12V2
D21
SR3100
PIN2
U2
C21
10uF
C22
4.7uF
R21
10
HO2
VS2
R22
10
LO2
PSD2
Header 2
P12V3
D31
SR3100
PIN3
U3
C31
10uF
C32
4.7uF
R31
10
HO3
VS3
R32
10
LO3
PSD3
JAINCE
Header 4
L1
2.4mH
RB1
10K
NB1
MOS-N
DB1
SR3100
POUT1
PACP
PACN
HO1
N1
MOS-N
RN1
10K
DN1
SR3100
HO2
N3
MOS-N
RN3
10K
DN3
SR3100
LO1
N2
MOS-N
RN2
10K
DN2
SR3100
LO2
N4
MOS-N
RN4
10K
DN4
SR3100
C1
Cap Pol1
470uF
C2
470uF/50V
NB2
MOS-N
DB2
SR3100
RB2
10K
POUT2
Header 4
Title
Size
A4
Number
Revision
Date: 2018/8/28
Sheet of
File: D:\AD`\AD6-3\2018暑假电赛\AC_DC.SchDoc
Drawn By: