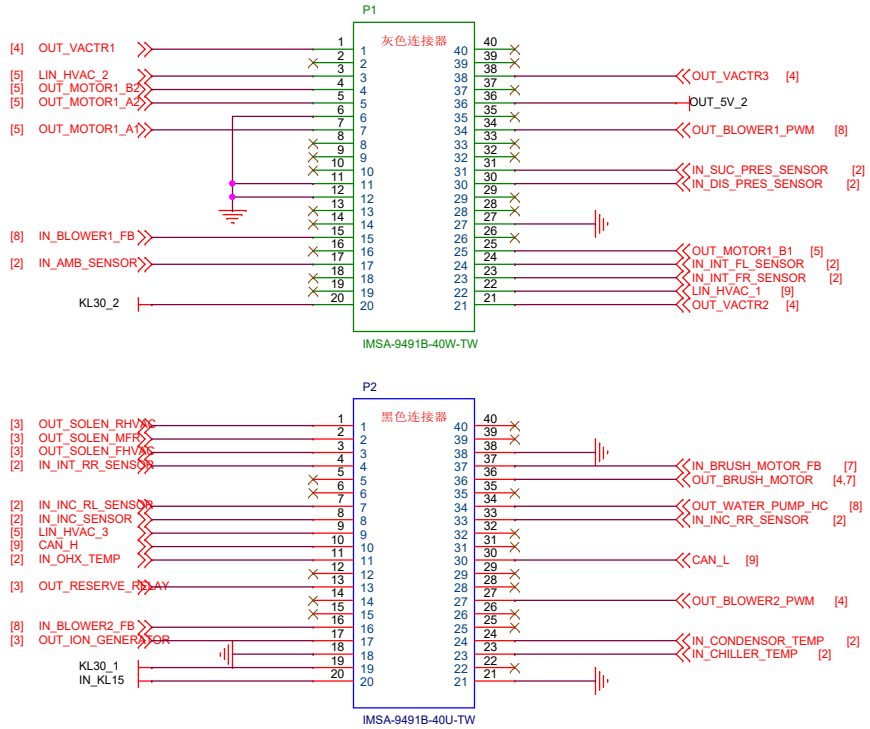

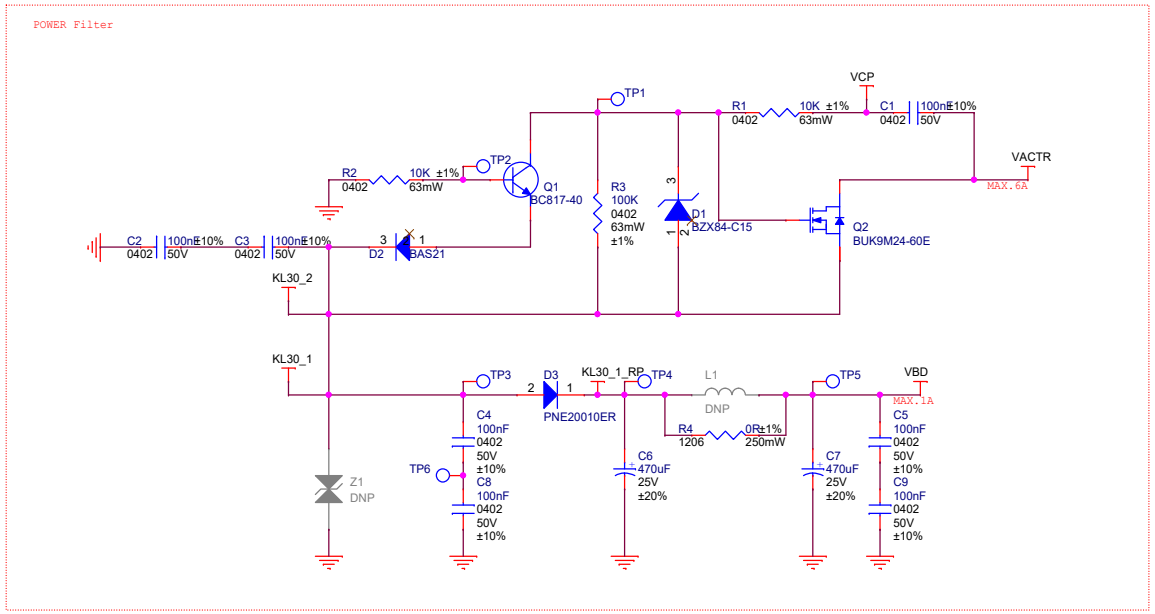

Title <Title>		
Size A3	Document Number <Doc>	Rev <RevCode>
Date: Wednesday, June 12, 2024	Sheet 1 of 9	

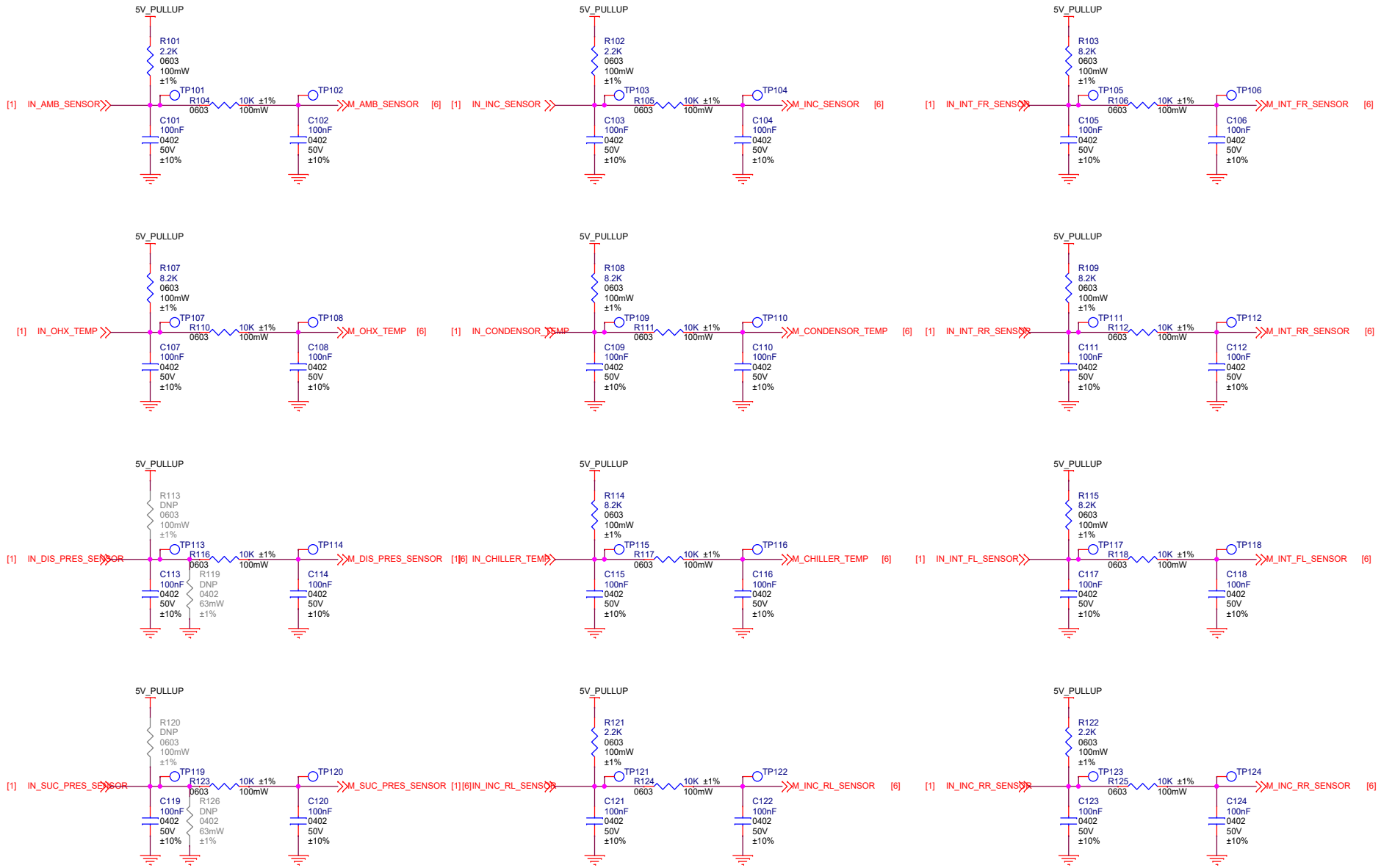

Title <Title>		
Size A3	Document Number <Doc>	Rev <RevCode>
Date: Wednesday, June 12, 2024	Sheet 2 of 9	

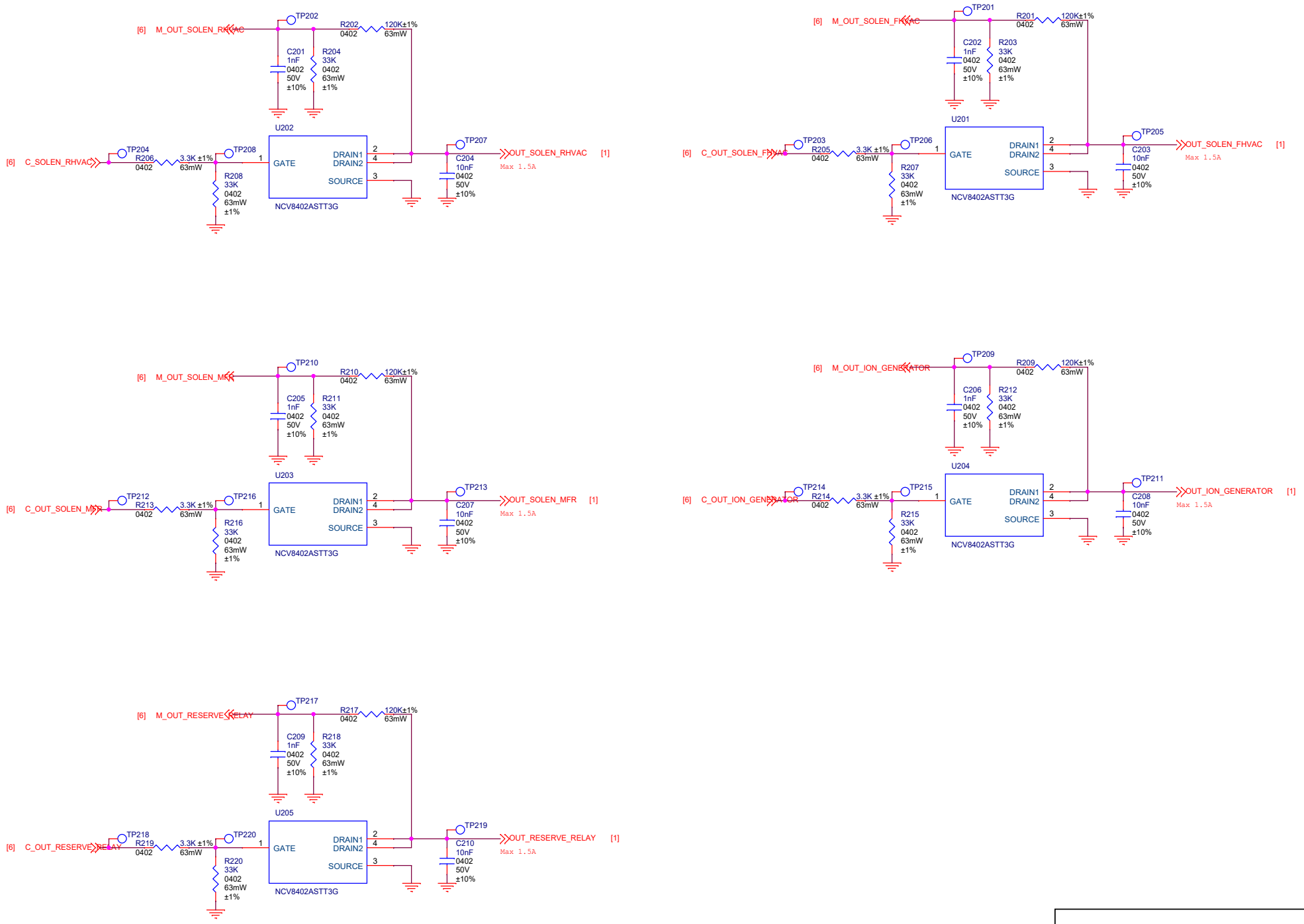

Title <Title>		
Size A3	Document Number <Doc>	Rev <RevCode>
Date: Monday, July 29, 2024	Sheet 3 of 9	

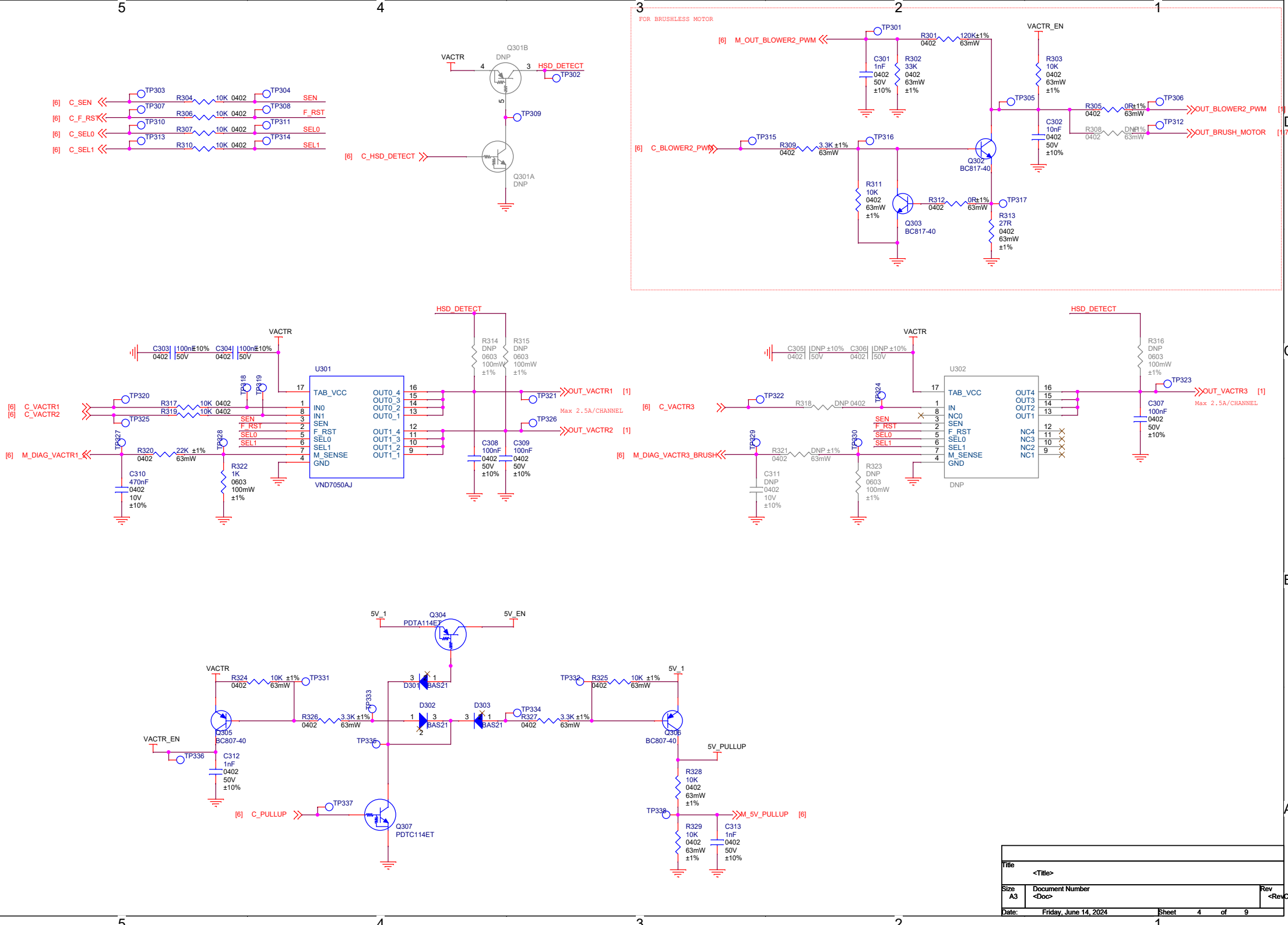
FOR BRUSHLESS MOTOR
[6] M_OUT_BLOWER2_PWM
TP301
R301 0402 120K±1% 63mW
VACTR_EN
C301 1nF 0402 50V ±10%
R302 33K 0402 63mW ±1%
R303 10K 0402 63mW ±1%
TP305
R305 0402 0R±1% 63mW
TP306
OUT_BLOWER2_PWM [9]
R308 0402 DNP 63mW
TP312
OUT_BRUSH_MOTOR [17]
C302 10nF 0402 50V ±10%
[6] C_BLOWER2_PWM
TP315
R309 0402 3.3K ±1% 63mW
TP316
Q302 BC817-40
R311 10K 0402 63mW ±1%
R312 0402 0R±1% 63mW
TP317
Q303 BC817-40
R313 27R 0402 63mW ±1%
[6] C_SEN
[6] C_F_RST
[6] C_SEL0
[6] C_SEL1
TP303
TP304
TP307
TP308
TP310
TP311
TP313
TP314
R304 10K 0402
R306 10K 0402
R307 10K 0402
R310 10K 0402
SEN
F_RST
SEL0
SEL1
Q301B DNP
VACTR
HSD_DETECT
TP302
TP309
[6] C_HSD_DETECT
Q301A DNP
HSD_DETECT
VACTR
C303 0402 100nF ±10% 50V
C304 0402 100nF ±10% 50V
U301
TAB_VCC
IN0
IN1
SEN
F_RST
SEL0
SEL1
M_SENSE
GND
OUT0_4
OUT0_3
OUT0_2
OUT0_1
OUT1_4
OUT1_3
OUT1_2
OUT1_1
VND7050AJ
R314 DNP 0603 100mW ±1%
R315 DNP 0603 100mW ±1%
TP321
OUT_VACTR1 [1]
Max 2.5A/CHANNEL
TP326
OUT_VACTR2 [1]
C308 100nF 0402 50V ±10%
C309 100nF 0402 50V ±10%
[6] C_VACTR1
[6] C_VACTR2
TP320
TP325
R317 10K 0402
R319 10K 0402
TP318
TP319
[6] M_DIAG_VACTR1_
TP327
R320 0402 22K ±1% 63mW
TP328
R322 1K 0603 100mW ±1%
C310 470nF 0402 10V ±10%
HSD_DETECT
VACTR
C305 0402 DNP ±10% 50V
C306 0402 DNP ±10% 50V
U302
TAB_VCC
IN
NC0
SEN
F_RST
SEL0
SEL1
M_SENSE
GND
OUT4
OUT3
OUT2
OUT1
NC4
NC3
NC2
NC1
DNP
R316 DNP 0603 100mW ±1%
TP323
OUT_VACTR3 [1]
Max 2.5A/CHANNEL
C307 100nF 0402 50V ±10%
[6] C_VACTR3
TP322
R318 DNP 0402
TP324
[6] M_DIAG_VACTR3_BRUSH
TP329
R321 0402 DNP ±1% 63mW
TP330
C311 DNP 0402 10V ±10%
R323 DNP 0603 100mW ±1%
5V_1
Q304 PDTA114ET
5V_EN
VACTR
R324 0402 10K ±1% 63mW
TP331
D301 BAS21
TP332
R325 0402 10K ±1% 63mW
5V_1
TP333
D302 BAS21
D303 BAS21
TP334
R327 0402 3.3K ±1% 63mW
R326 0402 3.3K ±1% 63mW
Q305 BC807-40
Q306 BC807-40
VACTR_EN
TP336
C312 1nF 0402 50V ±10%
TP335
5V_PULLUP
R328 10K 0402 63mW ±1%
TP338
M_5V_PULLUP [6]
R329 10K 0402 63mW ±1%
C313 1nF 0402 50V ±10%
[6] C_PULLUP
TP337
Q307 PDTC114ET
Title
<Title>
Size A3
Document Number
<Doc>
Rev
<RevCode>
Date: Friday, June 14, 2024
Sheet 4 of 9

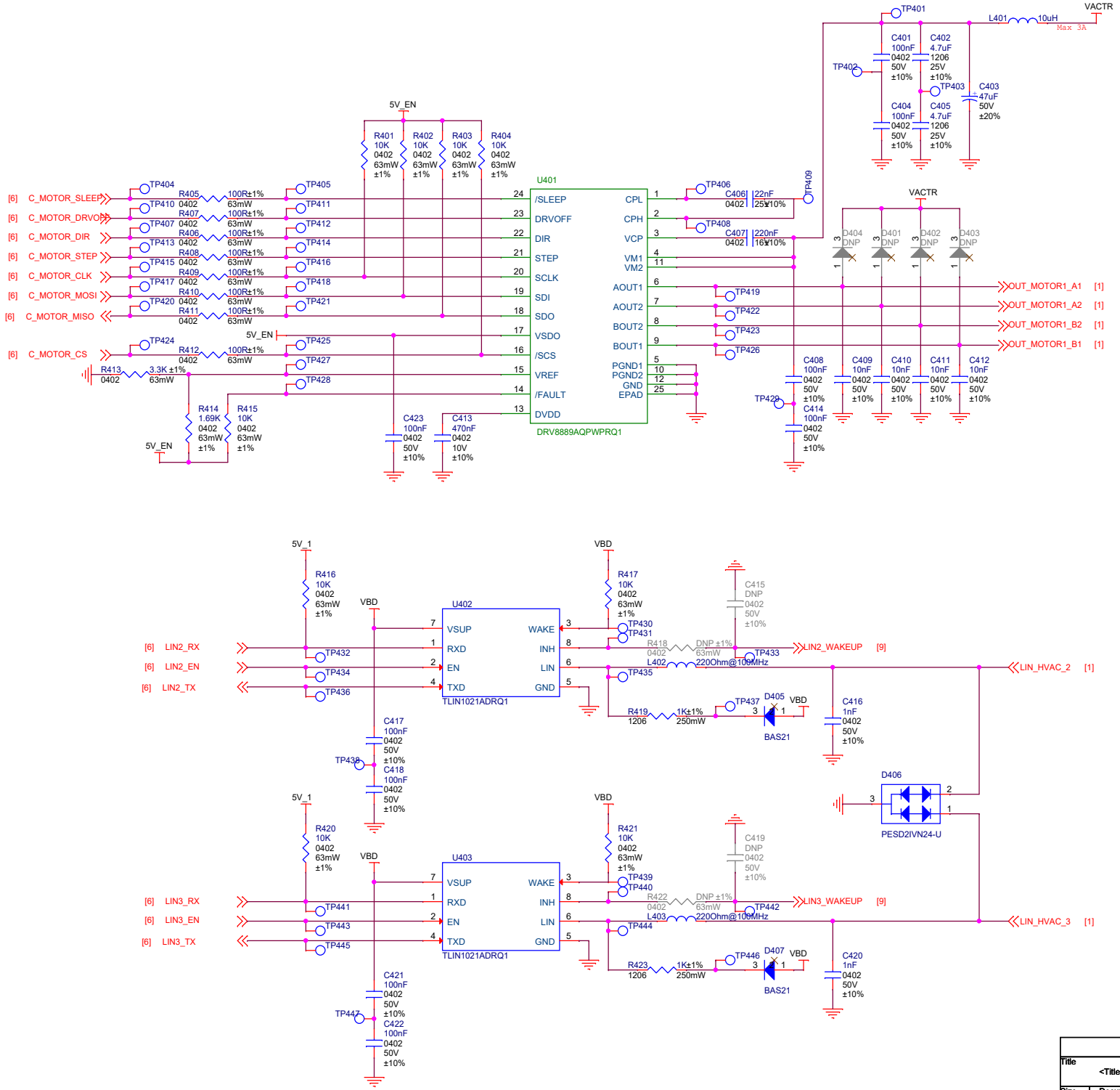

Title <Title>		
Size A3	Document Number <Doc>	Rev <RevCode>
Date: Wednesday, June 12, 2024	Sheet 5 of 9	

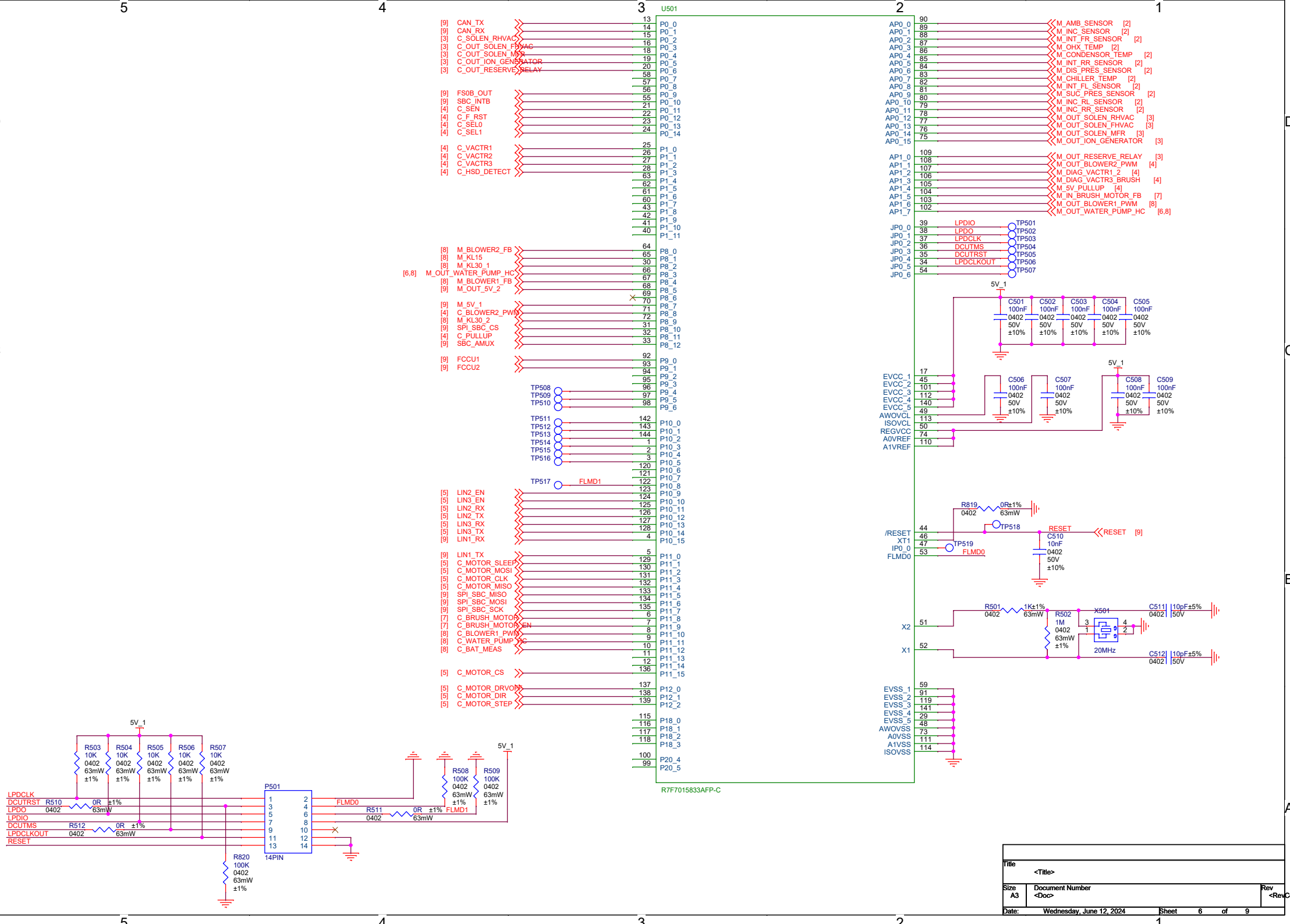

Title	<Title>
Size A3	Document Number <Doc>
Rev	<RevCode>
Date: Wednesday, June 12, 2024	Sheet 6 of 9

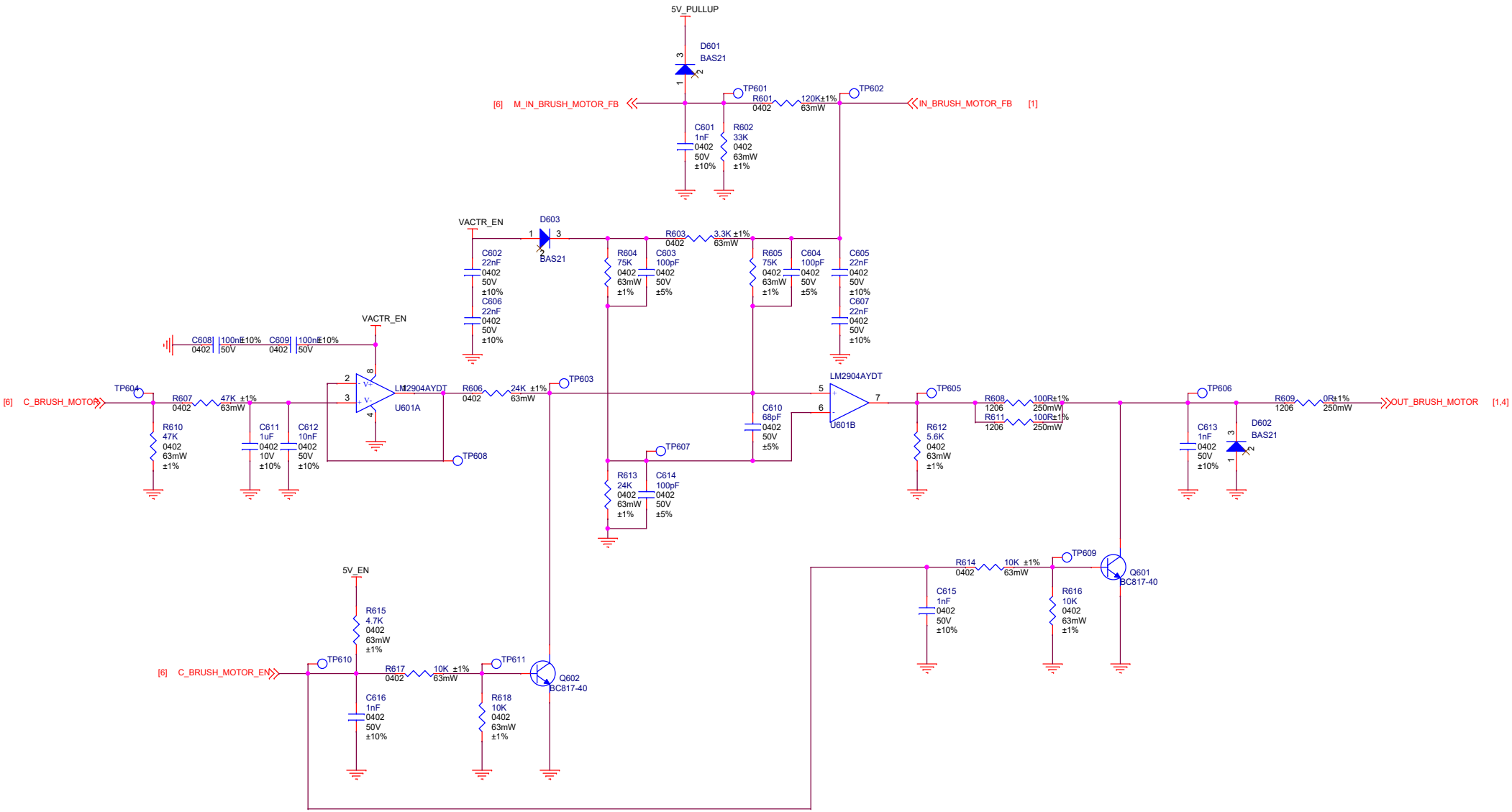

Title <Title>		
Size A3	Document Number <Doc>	Rev <RevCode>
Date: Monday, July 29, 2024	Sheet 7 of 9	

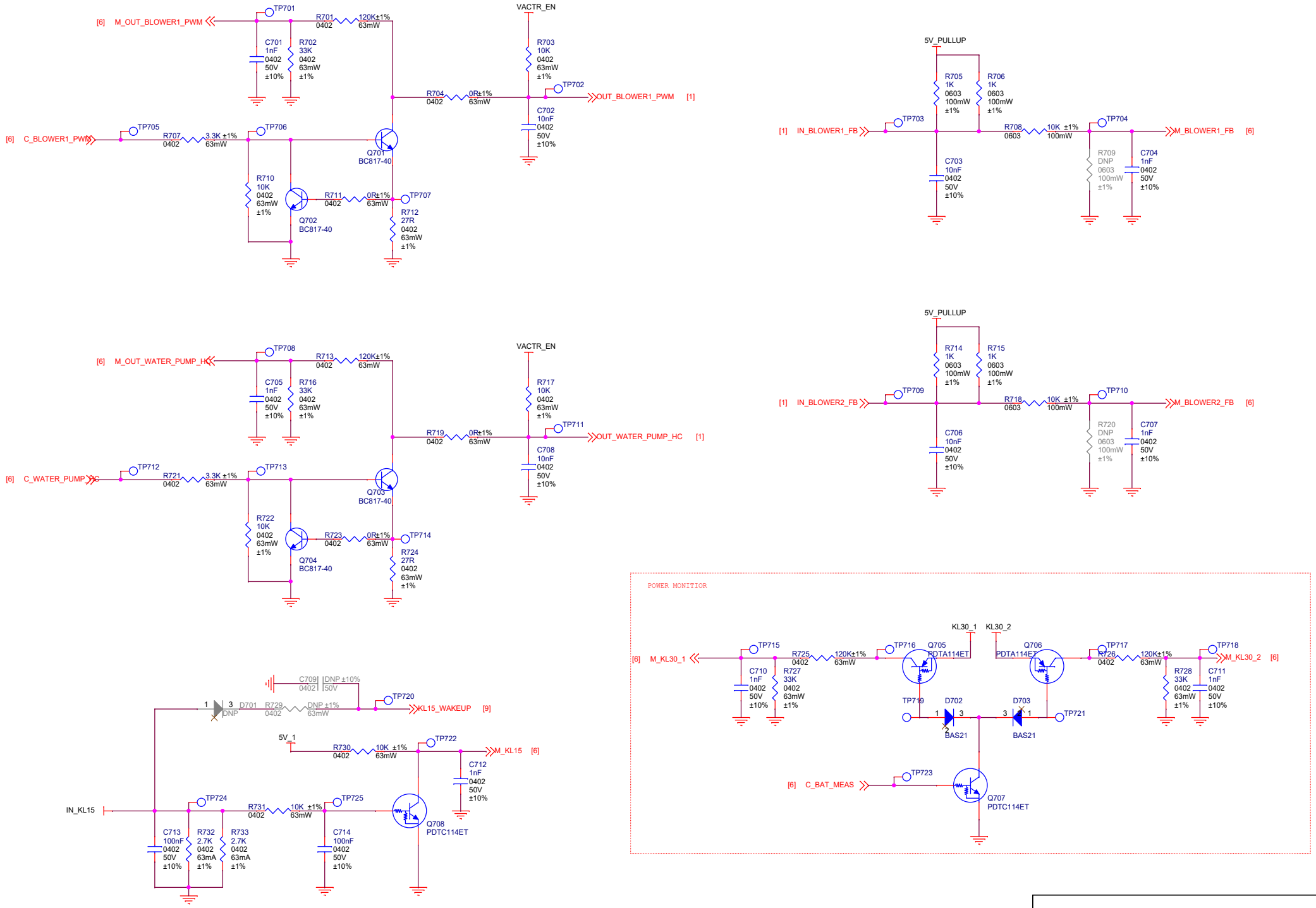

Title <Title>		
Size A3	Document Number <Doc>	Rev <RevCode>
Date: Monday, July 29, 2024	Sheet 8 of 9	

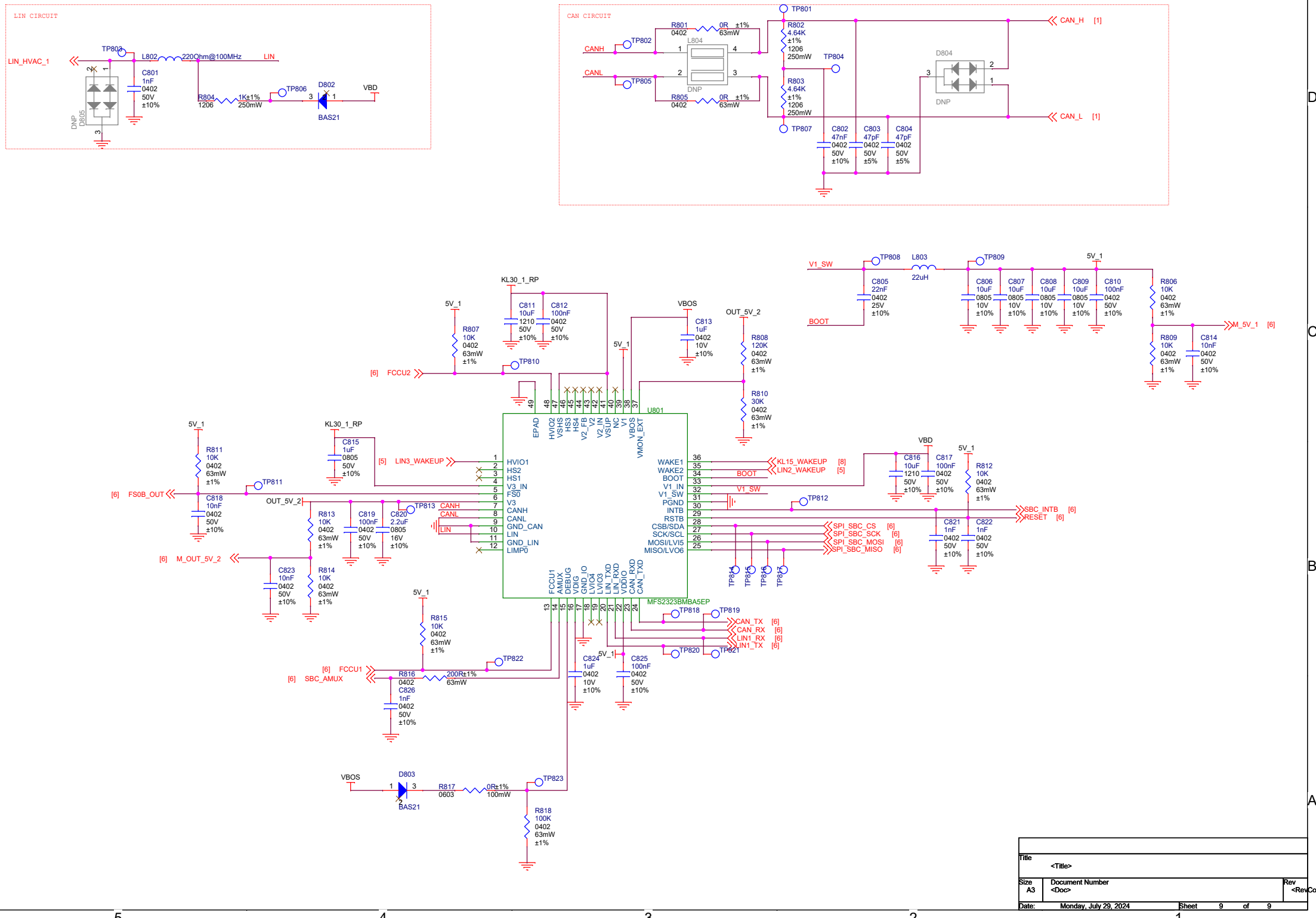
LIN CIRCUIT
[1] LIN_HVAC_1
TP803
L802 22Ohm@100MHz LIN
C801 1nF 0402 50V ±10%
DNP D805
R804 1206 1K±1% 250mW
TP806
D802 BAS21
VBD
CAN CIRCUIT
CANH
CANL
TP802
TP805
R801 0402 0R ±1% 63mW
L804
DNP
R805 0402 0R ±1% 63mW
TP801
R802 4.64K ±1% 1206 250mW
TP804
R803 4.64K ±1% 1206 250mW
TP807
D804
DNP
CAN_H [1]
CAN_L [1]
C802 47nF 0402 50V ±10%
C803 47pF 0402 50V ±5%
C804 47pF 0402 50V ±5%
V1_SW
BOOT
TP808
L803 22uH
TP809
C805 22nF 0402 25V ±10%
C806 10uF 0805 10V ±10%
C807 10uF 0805 10V ±10%
C808 10uF 0805 10V ±10%
C809 10uF 0805 10V ±10%
C810 100nF 0402 50V ±10%
5V_1
R806 10K 0402 63mW ±1%
M_5V_1 [6]
R809 10K 0402 63mW ±1%
C814 10nF 0402 50V ±10%
KL30_1_RP
C811 10uF 1210 50V ±10%
C812 100nF 0402 50V ±10%
VBOS
C813 1uF 0402 10V ±10%
OUT_5V_2
R808 120K 0402 63mW ±1%
R810 30K 0402 63mW ±1%
R807 10K 0402 63mW ±1%
[6] FCCU2
TP810
U801
MFS2323BMBA5EP
EPAD
HVIO2
VSHS
HS3
HS4
V2_FB
V2
V2_IN
VSUP
VC
VBOS
VMON_EXT
HVIO1
HS2
HS1
V3_IN
FS0
V3
CANH
CANL
GND_CAN
LIN
GND_LIN
LIMP0
WAKE1
WAKE2
BOOT
V1_IN
V1_SW
PGND
INTB
RSTB
CSB/SDA
SCK/SCL
MOSI/LVI5
MISO/LVO6
FCCU1
AMUX
DEBUG
VDIG
GND_IO
LVIO4
LVIO3
LIN_TXD
LIN_RXD
VDIO
CAN_RXD
CAN_TXD
[5] LIN3_WAKEUP
KL15_WAKEUP [8]
LIN2_WAKEUP [5]
SPI_SBC_CS [6]
SPI_SBC_SCK [6]
SPI_SBC_MOSI [6]
SPI_SBC_MISO [6]
SBC_INTB [6]
RESET [6]
TP811
TP812
TP813
TP814
TP815
TP816
TP817
TP818
TP819
TP820
TP821
TP822
TP823
R811 10K 0402 63mW ±1%
[6] FS0B_OUT
C818 10nF 0402 50V ±10%
C815 1uF 0805 50V ±10%
C816 10uF 1210 50V ±10%
C817 100nF 0402 50V ±10%
R812 10K 0402 63mW ±1%
C821 1nF 0402 50V ±10%
C822 1nF 0402 50V ±10%
R813 10K 0402 63mW ±1%
C819 100nF 0402 50V ±10%
C820 2.2uF 0805 16V ±10%
[6] M_OUT_5V_2
C823 10nF 0402 50V ±10%
R814 10K 0402 63mW ±1%
R815 10K 0402 63mW ±1%
[6] FCCU1
[6] SBC_AMUX
R816 0402 200R±1% 63mW
C826 1nF 0402 50V ±10%
C824 1uF 0402 10V ±10%
C825 100nF 0402 50V ±10%
CAN_TX [6]
CAN_RX [6]
LIN1_RX [6]
LIN1_TX [6]
VBOS
D803 BAS21
R817 0603 0R±1% 100mW
R818 100K 0402 63mW ±1%
Title
<Title>
Size A3
Document Number
<Doc>
Rev
<RevCode>
Date: Monday, July 29, 2024
Sheet 9 of 9