Dynamic Partial Reconfiguration

Arun Murugappan, Pranav T Varkey, Shrikrishna Pandit

What is DPR?

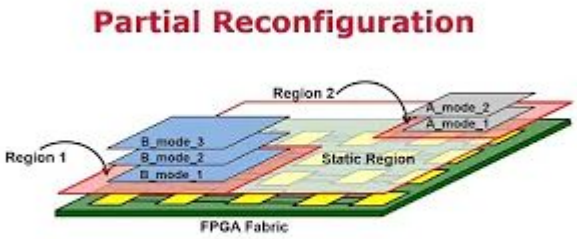

Dynamic partial reconfiguration (DPR) is a feature in modern Field-Programmable Gate Arrays (FPGAs) that allows for the runtime modification of a specific portion of the FPGA while the rest of the device continues to operate

Table of contents

- **Current Work**
  - Runtime reconfigurable RISC-V Core using Vivado DFX
  - Fast and Flexible FPGA Dev using Hierarchical partial Reconfiguration
  - ZyPR End-to-end Build Tool and Runtime Manager for Partial Reconfiguration of FPGA SoCs at the Edge

Core

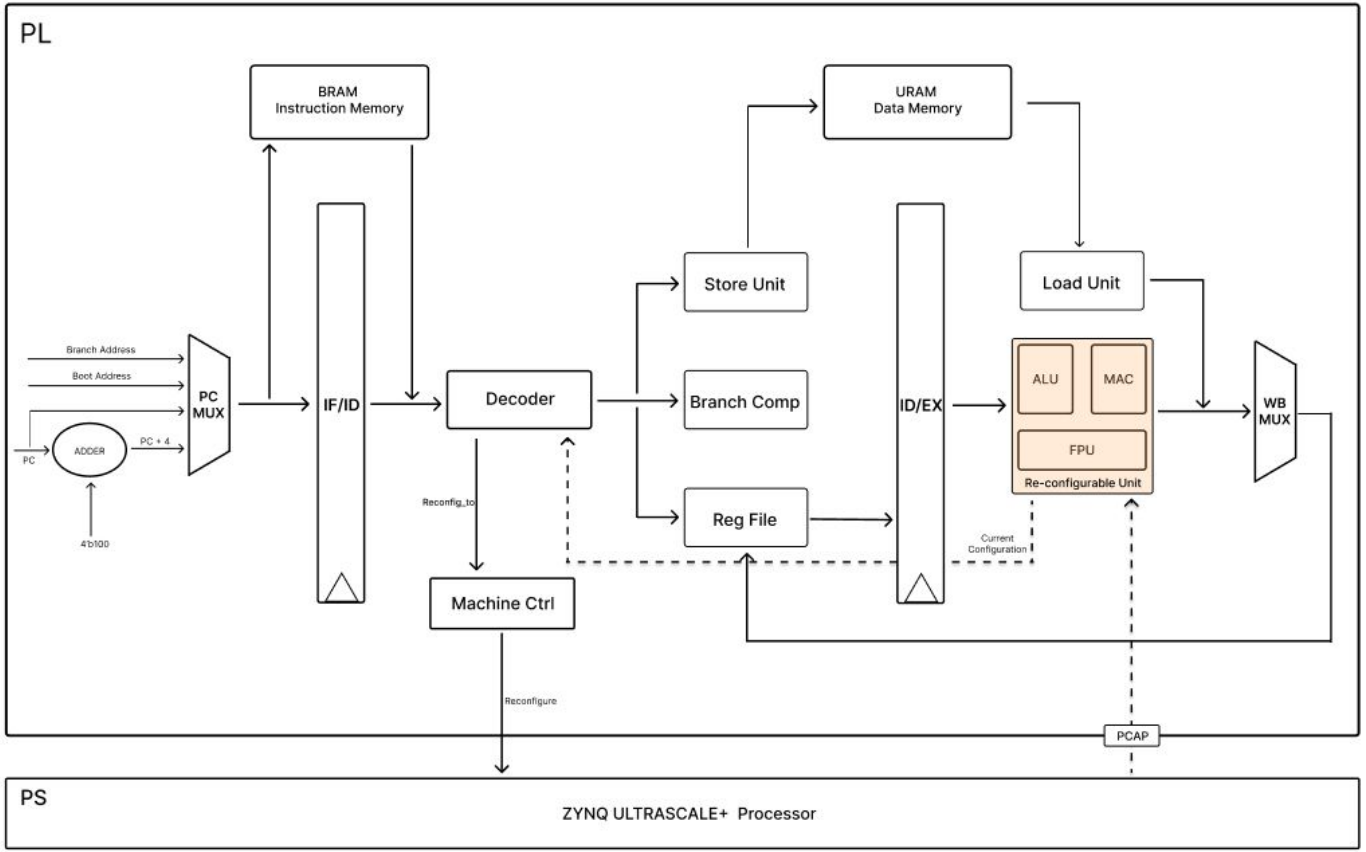
PL
BRAM
Instruction Memory
URAM
Data Memory
Store Unit
Load Unit
Branch Address
Boot Address
PC
ADDER
PC + 4
4'b100
PC
MUX
IF/ID
Decoder
Branch Comp
ID/EX
ALU
MAC
FPU
Re-configurable Unit
WB
MUX
Reg File
Reconfig_to
Current
Configuration
Machine Ctrl
Reconfigure
PCAP
PS
ZYNQ ULTRASCALE+ Processor

Core Control Unit

FSM:

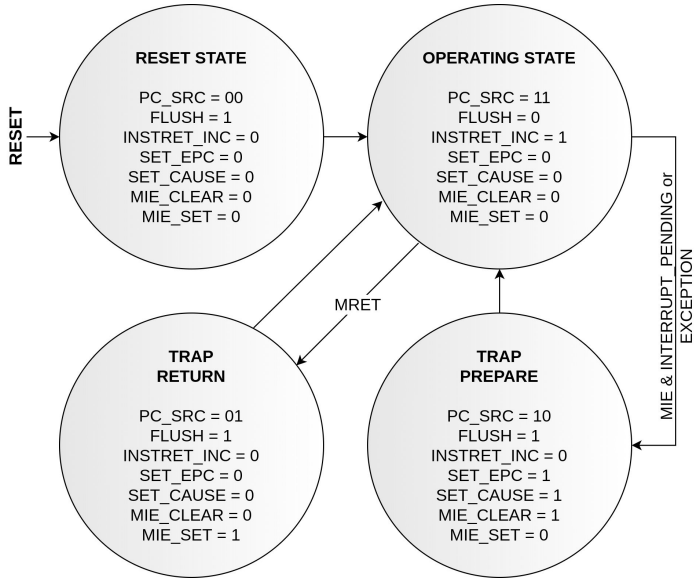

New FSM With Reconfiguration

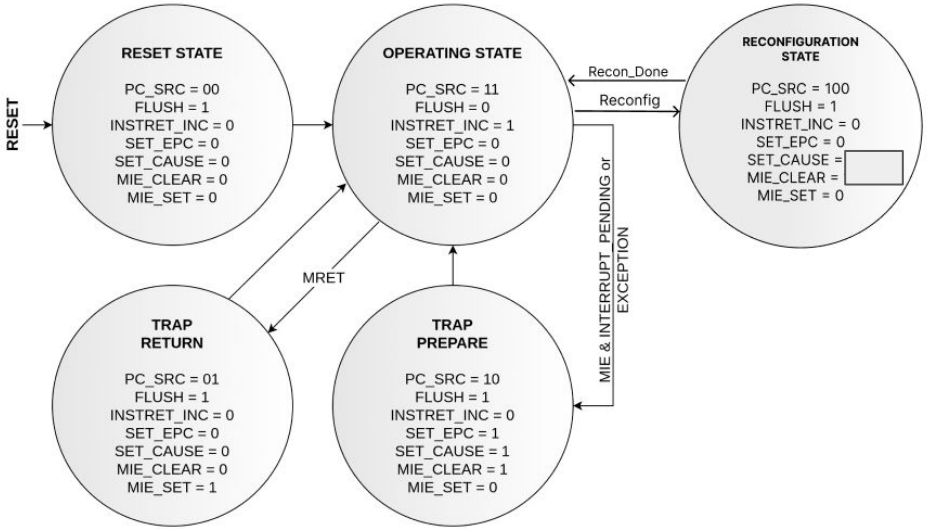

Block Diagram

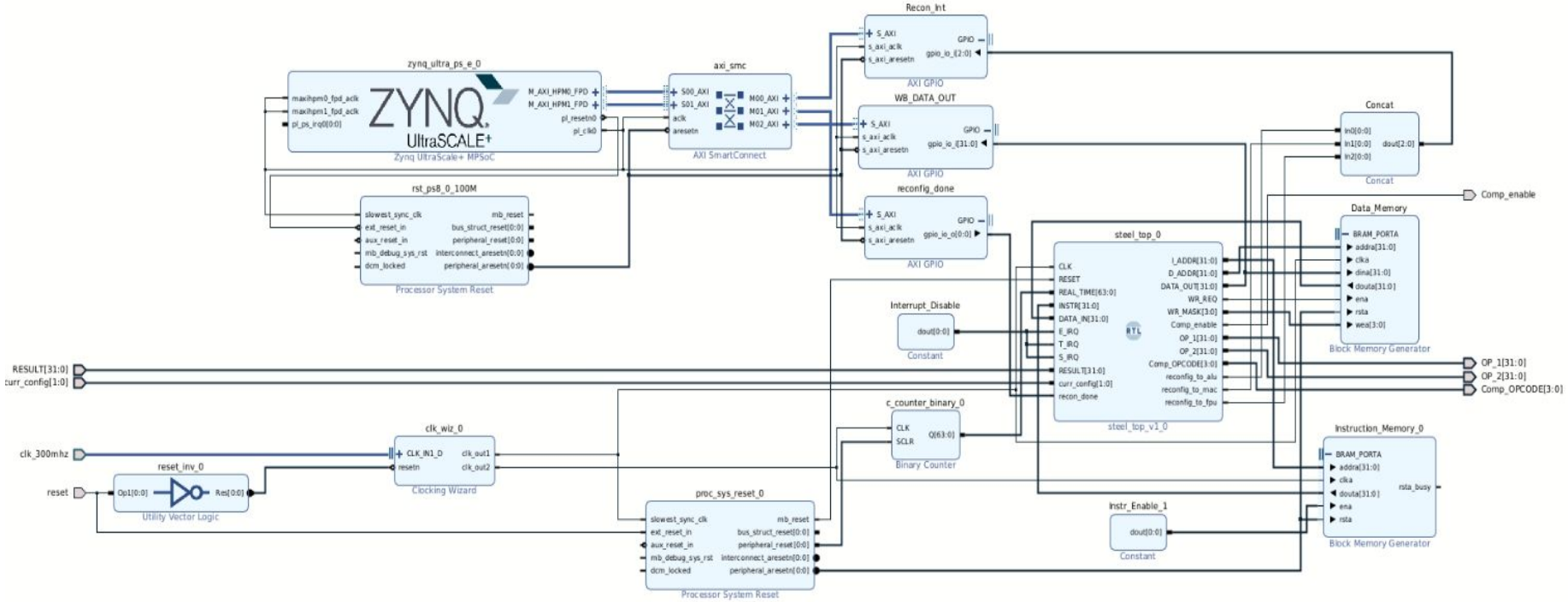

Floorplan

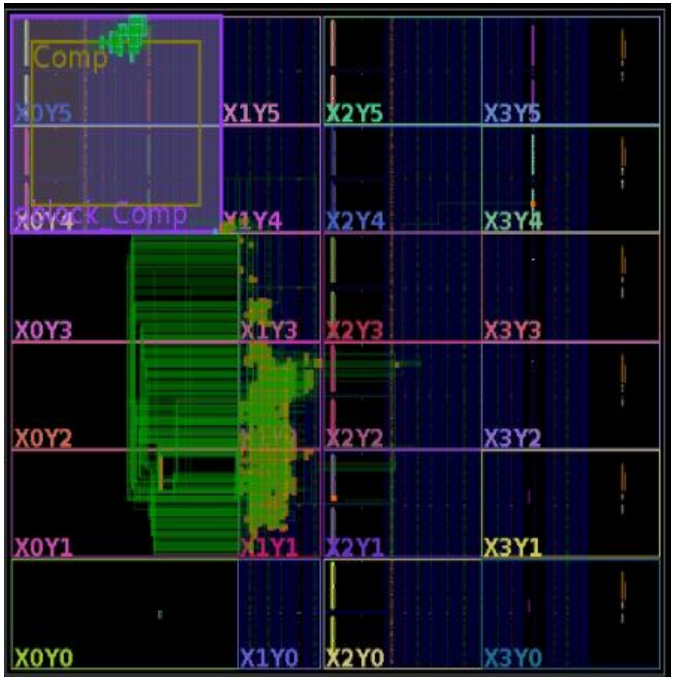

MAC Implementation

Operating Frequency and Logic Utilization on ZCU104

Block	Freq (MHz)
Core w/o Memory	154
Core	60
BRAM	120
URAM	60

Frequency

Block	Resources			
	LUT	BRAM	URAM	DSP
Core	4696	2	1	0
ALU	338	0	0	0
MAC	1039	0	0	3
FPU	613	0	0	3

Resources

RapidStream 1.0

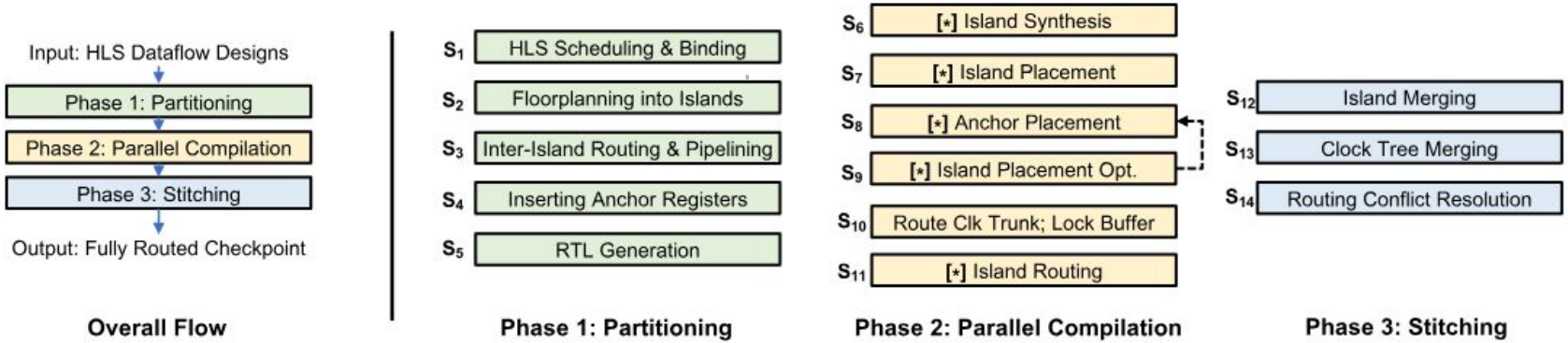

RapidStream License

RapidStream License

While TAPA compiler is open-source, RapidStream requires a free license. Request one at https://rapidstream-da.com/contact-us to access the full RapidStream TAPA flow.

Licheng Guo <lcguo@rapidstream-da.com>
to me

Hi Arun,

Thanks for your email. Unfortunately we are not distributing new licenses at this time.

Best,
Licheng

RapidStream 1.0

RapidStream Tool Flow:

RapidStream 1.0

RapidStream Tool Flow:

Run.sh Script file:

```
export RUN_DIR=/home/chips/Desktop/RapidStream/RS_runs
export HLS_PROJECT_PATH="./16x12/mm_16x12"
export SERVER_LIST=("10.2.81.149")  # any number of servers will work
export MAIN_SERVER="10.2.81.149"  # the one where you launch the run
```

Issues during implementation

```
Loading Vivado 2022.2 on all servers. This may take a while if running for the first time...
```

HPR

Goal: Reimplement the PR_flow and understand their work

- Generate reconfigurable overlay shells and operator bitstreams targeting ZCU102.

What the toolflow provides out-of-box?

- Makefile-driven overlay and operator compilation flow
- Scripts for partial bitstream management, slot scheduling, and placement
- Github of Xilinx for platform files (not prebuilt)

Hierarchical Partial Reconfiguration

Hierarchical Partial Reconfiguration:

- FPGA compilation is notoriously slow.
- Existing solutions force users to break designs into small, fixed regions, often resulting in suboptimal performance or extra manual effort.
- Unlike prior approaches with rigid, fixed-sized regions, the method this paper follows, allows, flexible, hierarchical regions that adapt to the size of each design block.

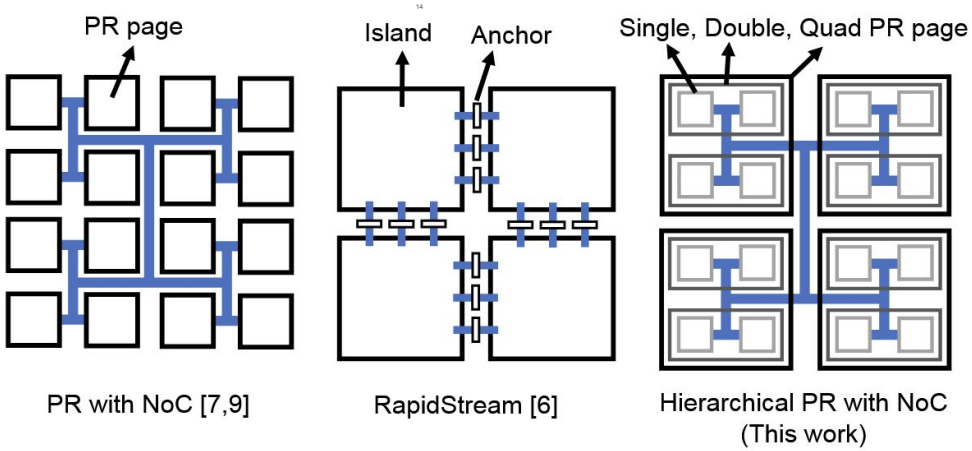

HPR

Component / Step	Observed Problem	Resolution / Status
HLS Synthesis	Creates new scripts with relative path files which don't seem to find its files	Need to find which of the nested script files is generating this issue.
License issue	The part that was specific to the board that was used by them for the demos is not freely available and works only within enterprise edition	Community forums link product-discussion-forum Started the 30-day free trial for enterprise edition
RUN vpl Failed	Vivado Platform loader failed when loading the config_hw files.	Going through the vpl.tcl script to understand what is happening and where it is going wrong. Spoke to Aprajita ma'am and have identified the start of where vpl linker fails

HPR

```
Command: synth_design -top leaf -part xczu9eg-ffvb1156-2-e -mode out_of_context
Starting synth_design
Attempting to get a license for feature 'Synthesis' and/or device 'xczu9eg'
WARNING: [Common 17-348] Failed to get the license for feature 'Synthesis' and/or device 'xczu9eg'. Explanation: The license feature Synthesis could not be found.
Resolution: Check the status of your licenses in the Vivado License Manager. For debug help search Xilinx Support for "Licensing FAQ".
0 Infos, 1 Warnings, 0 Critical Warnings and 1 Errors encountered.
synth_design failed
ERROR: [Common 17-345] A valid license was not found for feature 'Synthesis' and/or device 'xczu9eg'. Please run the Vivado License Manager for assistance in determining
which features and devices are licensed for your system.
Resolution: Check the status of your licenses in the Vivado License Manager. For debug help search Xilinx Support for "Licensing FAQ". If you are using a license server, verify that the license server is
 up and running a version of the xilinx daemon that is compatible with the version of Xilinx software that you are using. Please note that Vivado 2017.3 and later requires upgrading your license server t
ools to the Flex 11.14.1 tools. Please confirm with your license admin that the correct version of the license server tools are installed.
INFO: [Common 17-206] Exiting Vivado at Fri Aug  1 09:28:34 2025...
```

ERROR: [VPL 60-777] Sorry, but it appears that a Xilinx program has terminated unexpectedly. Please contact Xilinx technical support for further assistance and give them the contents of the Crash Log directory in /home/panda/hpr/prflow_nested_dfx/workspace/F001_overlay/ydma/zcu102/_x/logs/link

```
ERROR: [v++ 213-28] Failed to generate IP.
ERROR: [v++ 60-300] Failed to build kernel(ip) ydma, see log for details:
/home/panda/hpr/prflow_nested_dfx/workspace/F001_overlay_optical_flow_96_final/ydma/zcu102/
_x/ydma/ydma/vitis_hls.log
ERROR: [v++ 60-773] In '/home/panda/hpr/prflow_nested_dfx/workspace/F001_overlay_optical_flow_96
_final/ydma/zcu102/_x/ydma/ydma/vitis_hls.log', caught Tcl error: ERROR: '2507230704' is an invalid argument.
Please specify an integer value.
ERROR: [v++ 60-773] In '/home/panda/hpr/prflow_nested_dfx/workspace/F001_overlay_optical_flow_96
_final/ydma/zcu102/_x/ydma/ydma/vitis_hls.log', caught Tcl error: ERROR: [IMPL 213-28] Failed to generate IP.
ERROR: [v++ 60-599] Kernel compilation failed to complete
ERROR: [v++ 60-592] Failed to finish compilation
INFO: [v++ 60-1653] Closing dispatch client.
make[1]: *** [Makefile:35: ydma.xo] Error 1
make[1]: Leaving directory '/home/panda/hpr/prflow_nested_dfx/workspace/F001_overlay_optical_flow_96
_final/ydma/zcu102'
```

ZyPR

Goal: Implement an adaptive RISCV core
Idea: Use ZyPR flow to develop a RISCV core that can switch out the co processing unit
ZyPR: An abstracted toolflow for generating and runtime management of PR Applications in Zynq Architectures

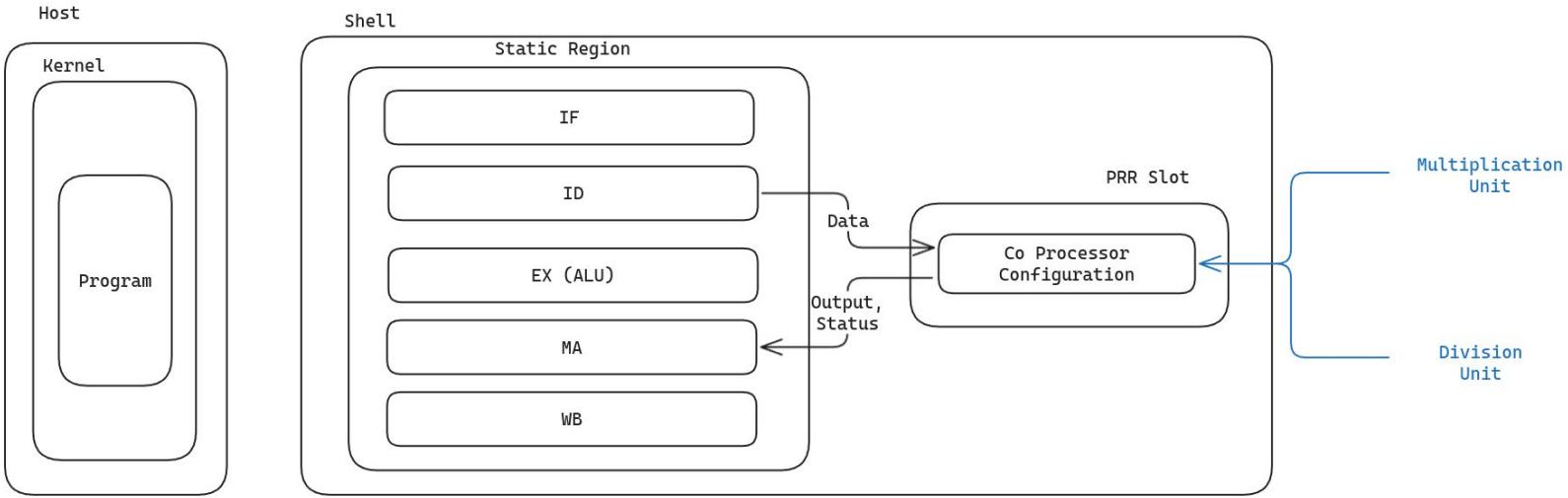

Status

- Bitstream and sdk files generation files successful
- Next Steps:
  - Implement the runtime reconfigurable RISC-V core through ZyPR tool
  - Port the tool for zcu104 board
    - Requires adapting the kernel to the peripherals available on the board

```
root@fd110d6ae33f:/home/zycap/solution# find . -name "*.bit"
./hls_vision_demo.runs/impl_1/hls_vision_demo_wrapper.bit
./hls_vision_demo.runs/impl_1/hls_vision_demo_wrapper_pblock_1_partial.bit
./hls_vision_demo.runs/impl_1/hls_vision_demo_wrapper_pblock_0_partial.bit
./hls_vision_demo.bitstreams/chroma_chroma_chroma_chroma_pblock_0_partial.bit
./hls_vision_demo.bitstreams/chroma_top_chroma_top_pblock_0_partial.bit
./hls_vision_demo.bitstreams/chroma_top_chroma_top_pblock_1_partial.bit
./hls_vision_demo.bitstreams/top_top_top_top_pblock_1_partial.bit
./hls_vision_demo.bitstreams/top_top_top_top_pblock_0_partial.bit
./hls_vision_demo.bitstreams/chroma_chroma_chroma_chroma_pblock_1_partial.bit
./hls_vision_demo.bitstreams/chroma_top_chroma_top.bit
./hls_vision_demo.bitstreams/top_top_top_top.bit
./hls_vision_demo.bitstreams/chroma_chroma_chroma_chroma.bit
./hls_vision_demo.bit
./hls_vision_demo.sdk/hls_vision_demo.bit
```

```
root@fd110d6ae33f:/home/zycap/solution/h
ls_vision_demo.sdk# ls
atf                 pmufw
bl31.elf            pmufw.elf
boot.bif            psu_init.c
boot.bin            psu_init_gpl.c
device_tree         psu_init_gpl.h
fsbl                psu_init.h
fsbl.elf            psu_init.html
hls_vision_demo.bit psu_init.tcl
hls_vision_demo.xsa uboot
mmio                u-boot.elf
mmio.csv
```