Dynamic Partial Reconfiguration

Arun Murugappan, Pranav T Varkey, Shrikrishna Pandit

Table of Contents

- HPR Implementation
- Runtime reconfiguration of a RISCV

FPGA Architecture

- FPGA consists of Configurable Logic Block (CLB) surrounded by interconnects,DSPs , RAMs, I/O, ports etc
- CLBs contains Look Up Tables(LUTs) which stores predefined data output for any combination of inputs.
- The device can be split into Hardware layer & Configuration Memory layer.
- Hardware Layer: Compute elements - DSPs, CLBs, Multipliers, interconnects etc
- Configuration Memory Layer contains Configuration information of the Hardware Layer

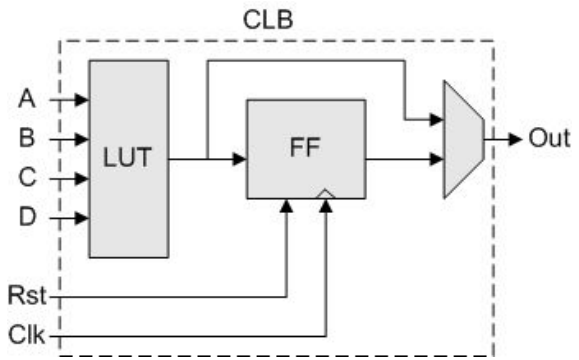

Simple CLB with 4 input LUT

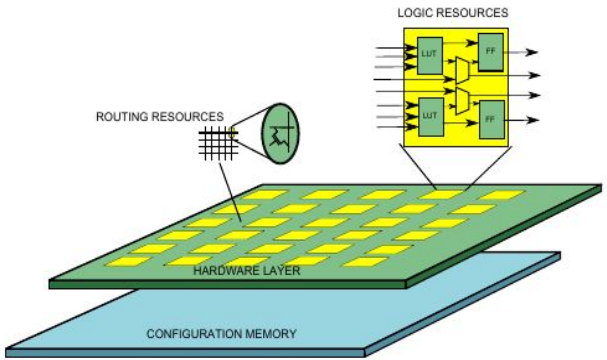

Layers of a FPGA

Partial Reconfiguration

- Partial Reconfiguration refers to the modification of one or more regions of the FPGA while the remaining regions are not altered
- Dynamic PR is when this process occurs during runtime of the device with no downtime

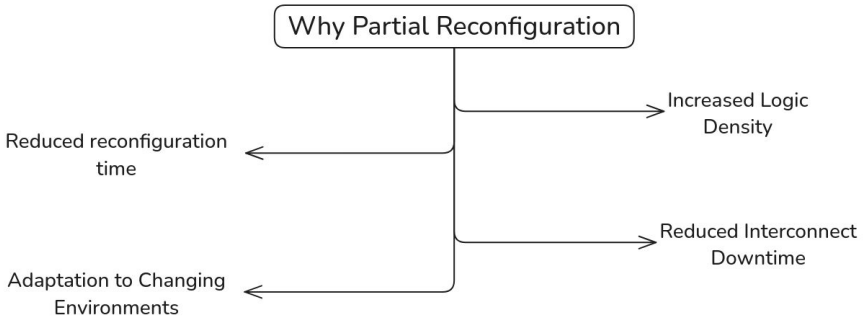

What is DPR?

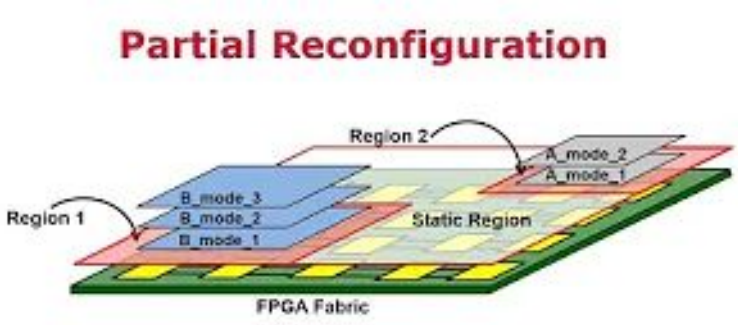

Dynamic partial reconfiguration (DPR) is a feature in modern Field-Programmable Gate Arrays (FPGAs) that allows for the runtime modification of a specific portion of the FPGA while the rest of the device continues to operate

HPR

- Environment
  - Ubuntu 20.04 on 5.11 kernel in Docker image (can’t downgrade)
  - Vivado 2021.1 and petalinux 2021.1
- Need the Xilinx Official platforms to be built for the for the xpfm files and aarch64-xilinx-linux-g++ paths that get added which didn’t carry over from the previous build.

- Current Issues - For the Xilinx Official platforms github repository
  - Slave segment fault : adaptive support,
  - Segfault : adaptive support,
  - Hs_err_pid15090 - multiple such logs every time it is run

Runtime Reconfiguration of Core

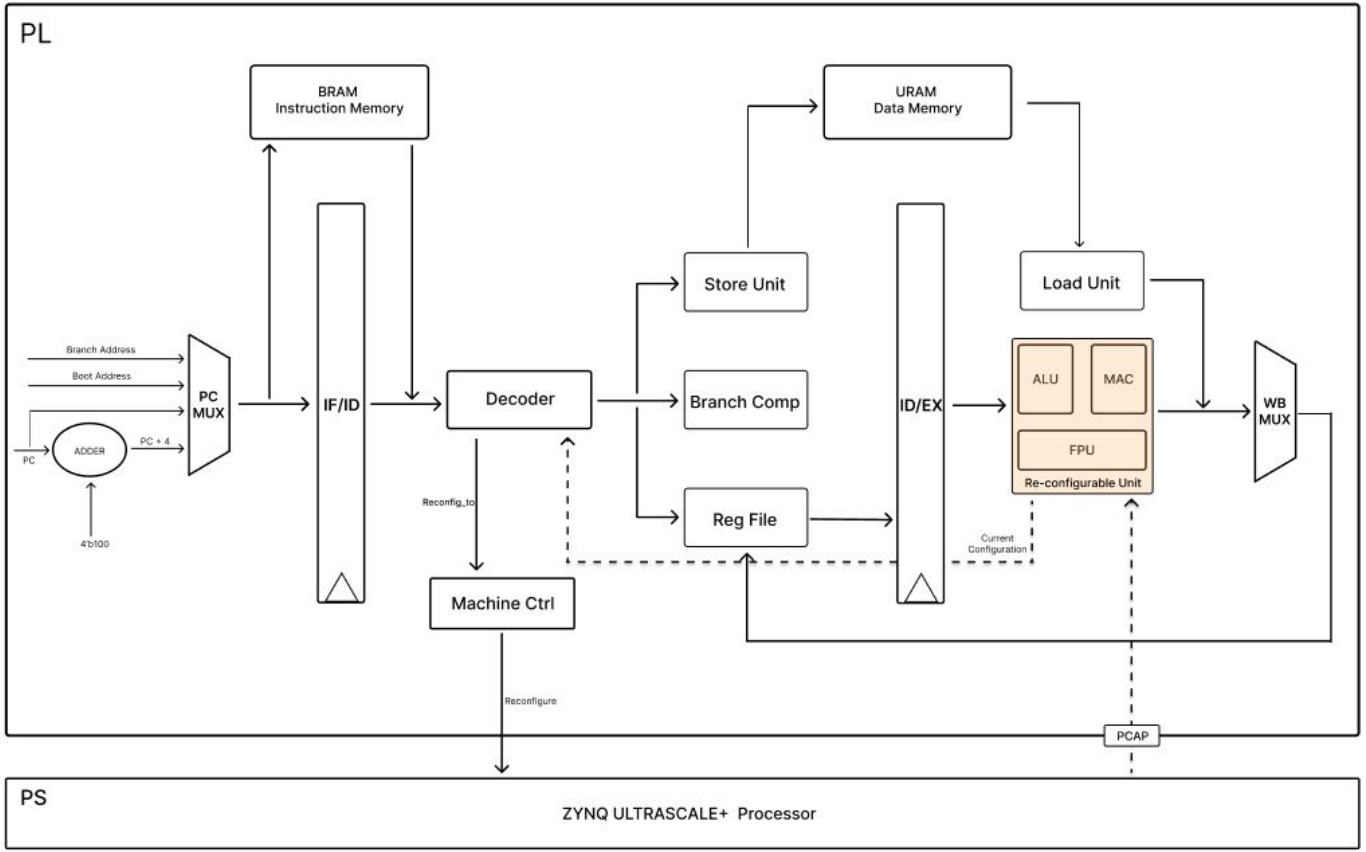

Runtime Reconfiguration of Co-Processor

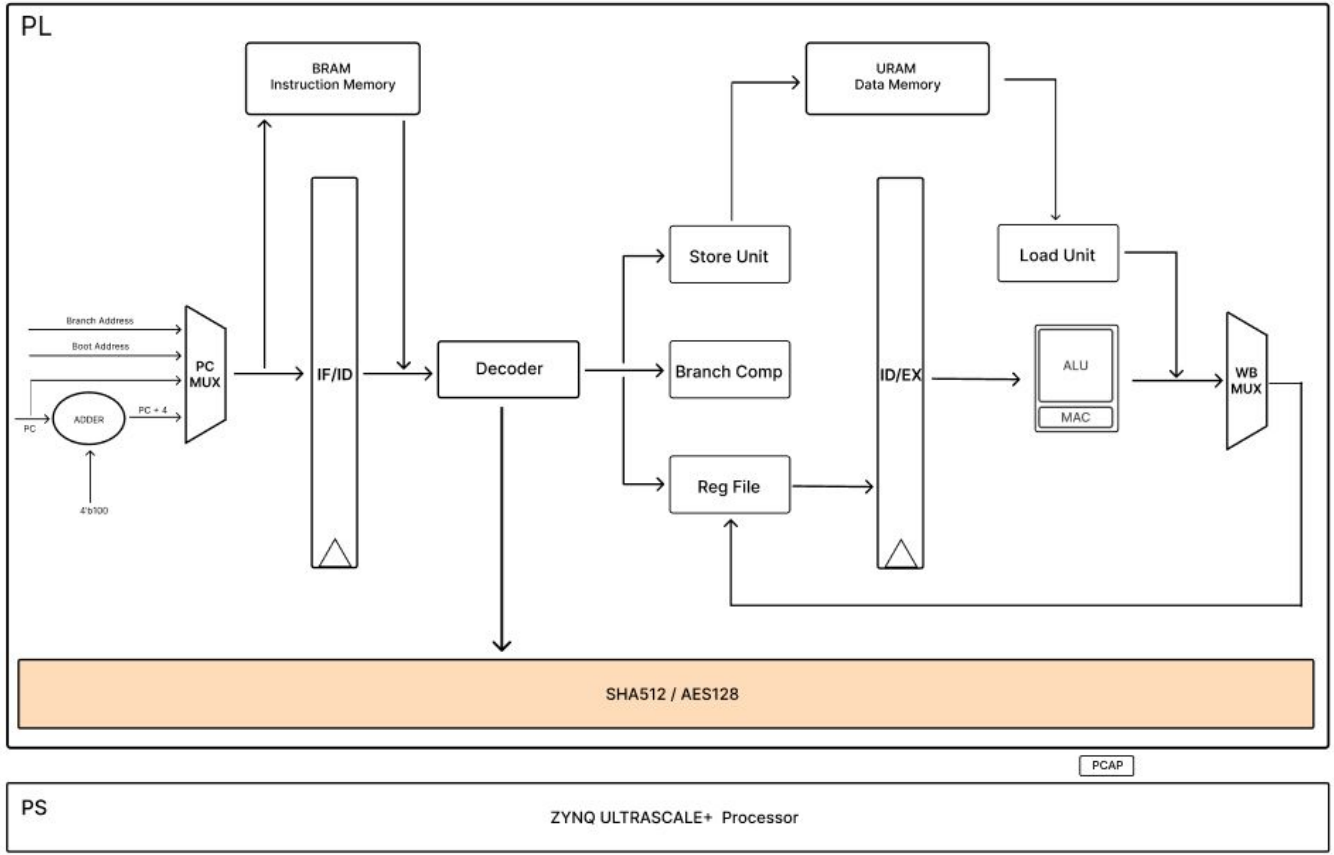

RISC-V toolchain extensions

- RV32GC Base processor
- Zkn extension - Encryption , Decryption and Hash
- Zb - bit manipulations extensions
- V - vector extension

SHA-512

- Instructions:
  - sha512sig0
  - sha512sig1
  - sha512sum0l
  - sha512sum0h
  - sha512sum1l
  - sha512sum1h
- Each round of SHA512 hash has 50 instructions
- SHA512 → 80 rounds → 4000 cycles

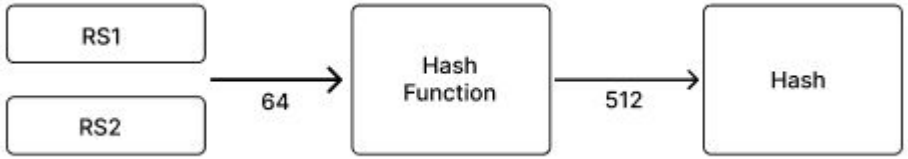

Thank

You