Dynamic Partial Reconfiguration

Arun Murugappan, Pranav T Varkey, Shrikrishna Pandit

Table of contents

- Recap / Intro
- Hardware/Software Co-Design of RISC-V Extensions for Accelerating Sparse DNNs on FPGAs

`

What is DPR?

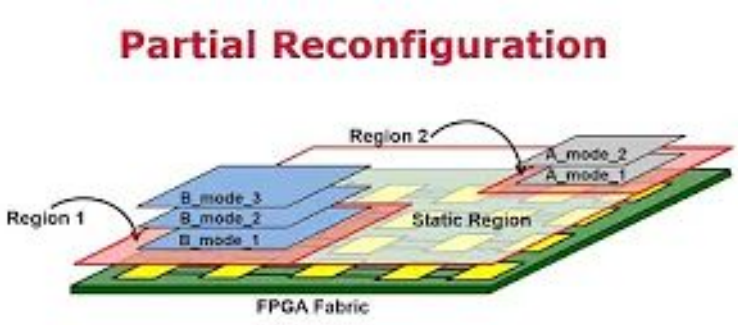

- Partial Reconfiguration refers to the modification of one or more regions of the FPGA while the remaining regions are not altered
- Dynamic PR is when this process occurs during runtime of the device with no downtime

Paper's Flow

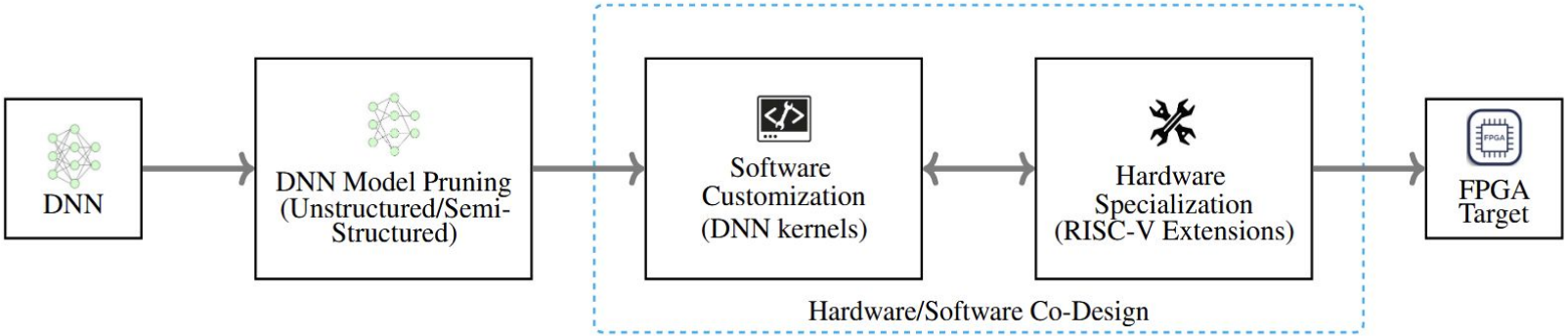
DNN
DNN Model Pruning (Unstructured/Semi-Structured)
Software Customization (DNN kernels)
Hardware Specialization (RISC-V Extensions)
FPGA Target
Hardware/Software Co-Design

CFU Architecture

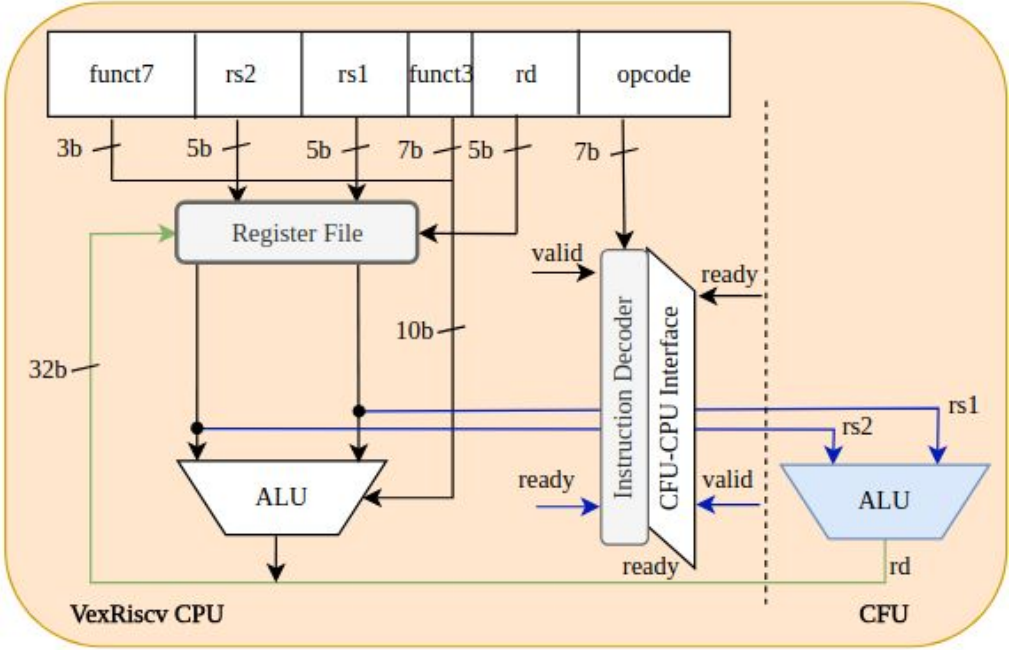

CPU-CFU Interface

CFU with Latency

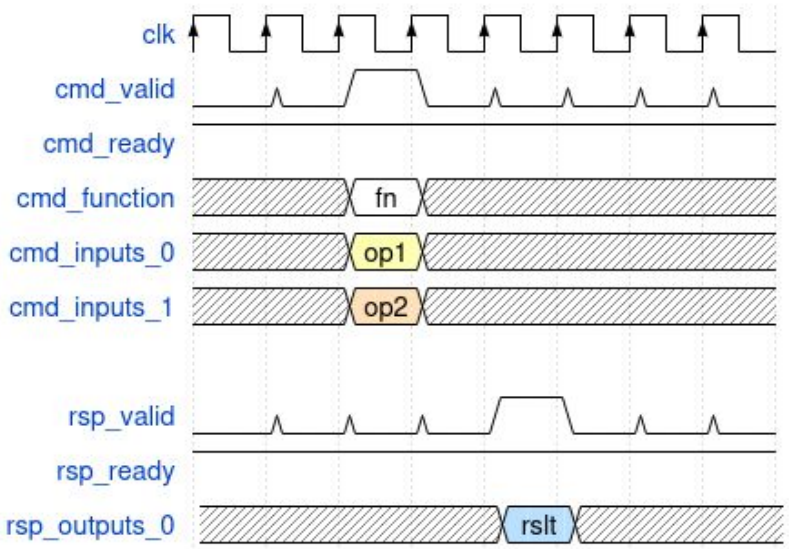

Split phase

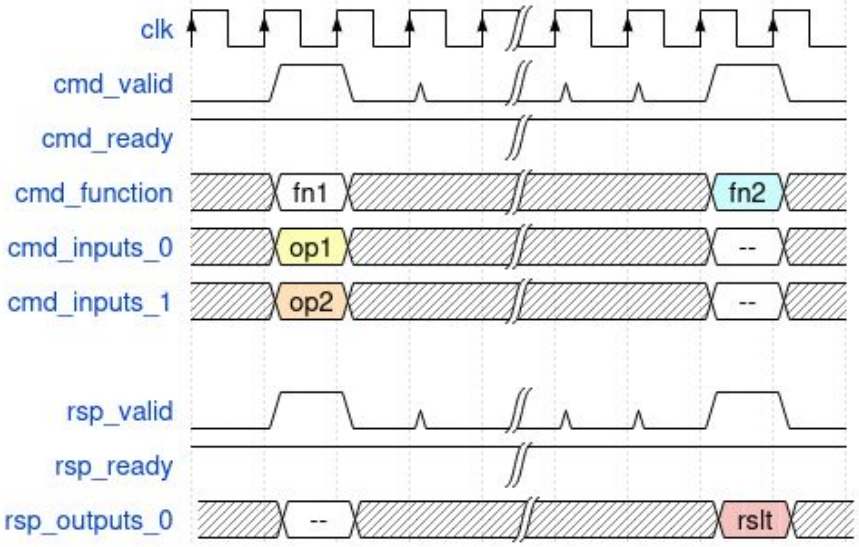

Current Results(Intermediate)

```
In [69]: import os

         pb_file_size = os.path.getsize(pr_files[0]["file"])

         print(f"File size is {pb_file_size} bytes")
         print(f"PCAP Througput is {(pb_file_size/pcap_del)*10**-3} MB/s")
         print(f"JTAG Througput is {(pb_file_size/jtag_del)*10**-3} MB/s")

         File size is 203308 bytes
         PCAP Througput is 183.1802956574013 MB/s
         JTAG Througput is 3.2352676831213576 MB/s
```

Current Results(Intermediate)

```
project> c

Running Combined Opcode tests

Exercise Combined CFU tests

 a        | b        | cfu_op0(ex) | cfu_op1(ex) | cfu_op2(ex) | cfu_op4(do) | cfu_op5(do) |
-----------------------------------------------------------------------------------------------
 00001234 | 00005555 || 00000000 | 00000000 | 00000000 | 00018453 | 06114f44 |
 00009338 | 0000d659 || 00000000 | 00000000 | 00000000 | 001ed0ff | 7b43fe78 |
 0001143c | 0001575d || 00000000 | 00000000 | 00000000 | 001ca02f | 7280bdcc |
 00019540 | 0001d861 || 00000000 | 00000000 | 00000000 | fffaf1e3 | ebc78d40 |
 00021644 | 00025965 || 00000000 | 00000000 | 00000000 | fff9c61b | e7186cd4 |
 00029748 | 0002da69 || 00000000 | 00000000 | 00000000 | 00191cd7 | 64735c88 |
 0003184c | 00035b6d || 00000000 | 00000000 | 00000000 | 0018f617 | 63d85c5c |
 00039950 | 0003dc71 || 00000000 | 00000000 | 00000000 | fff951db | e5476c50 |
 00041a54 | 00045d75 || 00000000 | 00000000 | 00000000 | fffa3023 | e8c08c64 |
---
```

```
project> c

Running Combined Opcode tests

Exercise Combined CFU tests

 a        | b        | cfu_op0(ex) | cfu_op1(ex) | cfu_op2(ex) | cfu_op4(do) | cfu_op5(do) |
-----------------------------------------------------------------------------------------------
 00001234 | 00005555 || 000000f0 | 34120000 | 2c480000 | 00000000 | 00000000 |
 00009338 | 0000d659 || 000001fa | 38930000 | 1cc90000 | 00000000 | 00000000 |
 0001143c | 0001575d || 00000106 | 3c140100 | 3c288000 | 00000000 | 00000000 |
 00019540 | 0001d861 || 00000210 | 40950100 | 02a98000 | 00000000 | 00000000 |
 00021644 | 00025965 || 0000011c | 44160200 | 22684000 | 00000000 | 00000000 |
 00029748 | 0002da69 || 00000226 | 48970200 | 12e94000 | 00000000 | 00000000 |
 0003184c | 00035b6d || 00000132 | 4c180300 | 3218c000 | 00000000 | 00000000 |
 00039950 | 0003dc71 || 0000023c | 50990300 | 0a99c000 | 00000000 | 00000000 |
 00041a54 | 00045d75 || 00000148 | 541a0400 | 2a582000 | 00000000 | 00000000 |
---
```

Custom Instruction Flow

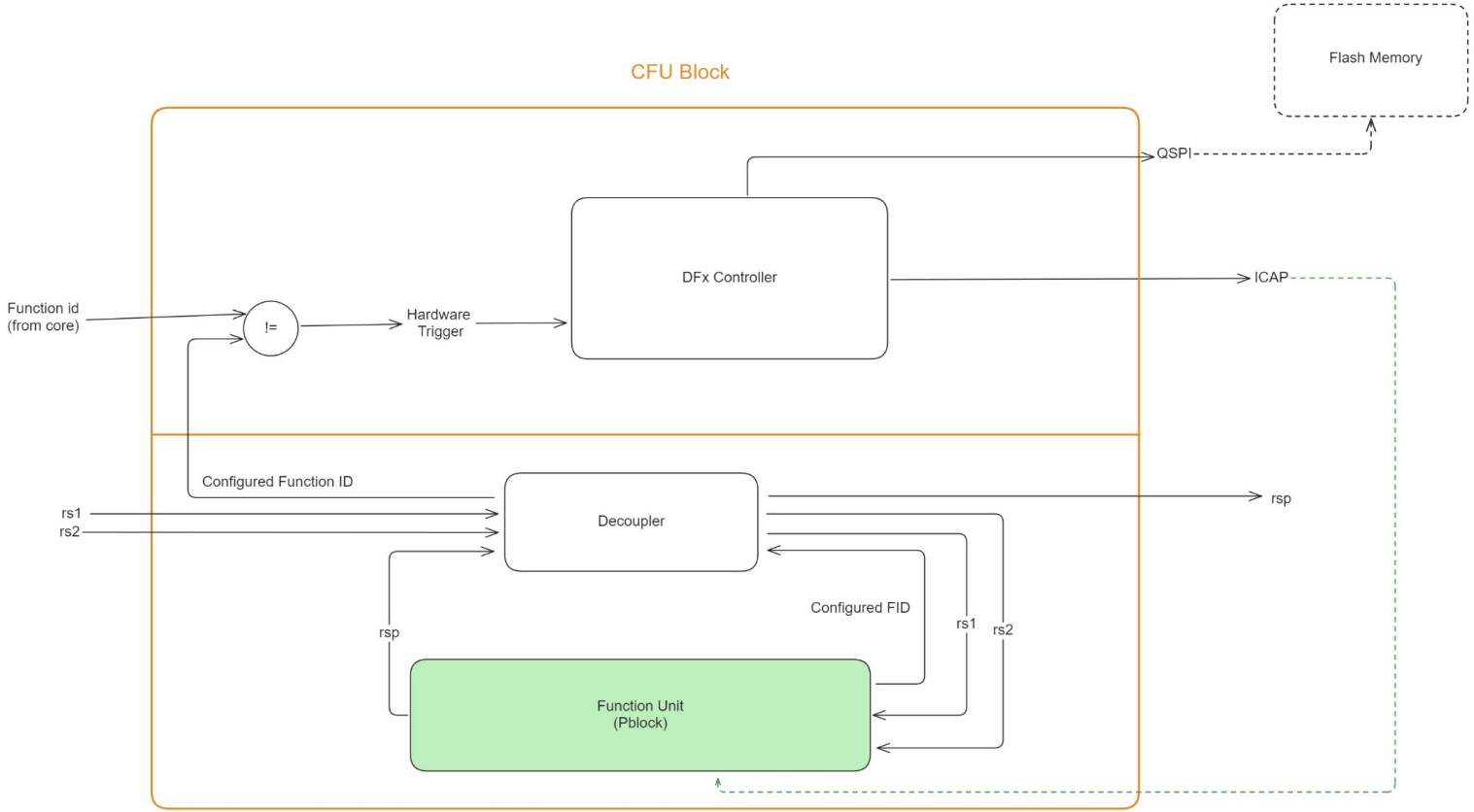

Thank

You