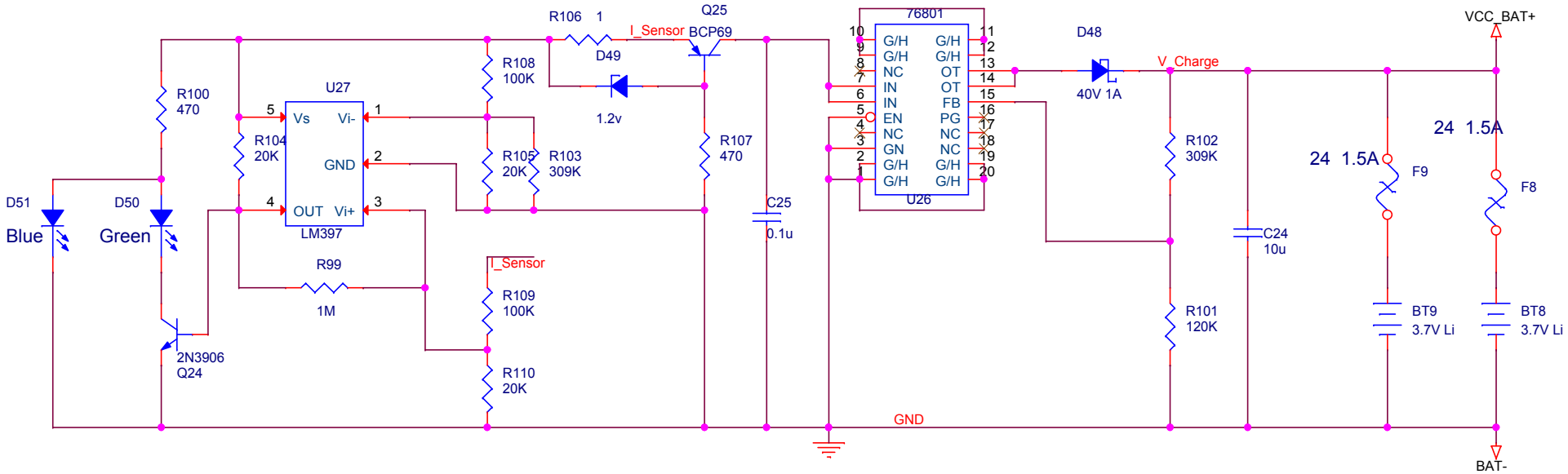

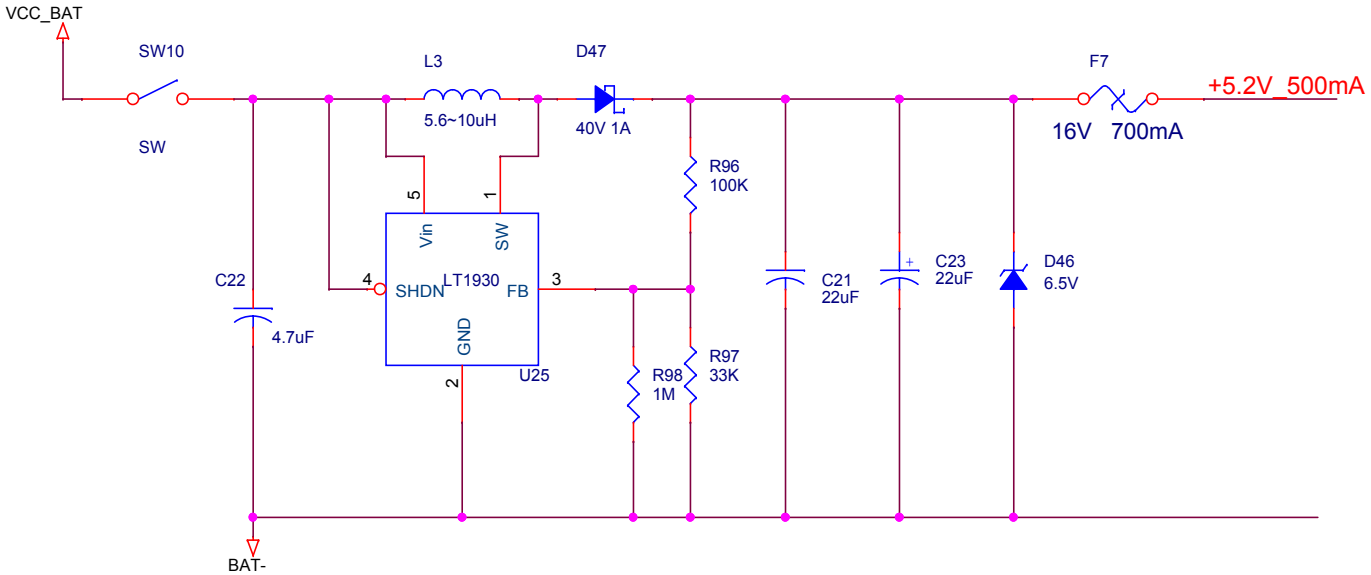

Title <Title>		
Size A4	Document Number <Doc>	Rev <RevCode>
Date: Friday, November 08, 2013	Sheet 1 of 1	