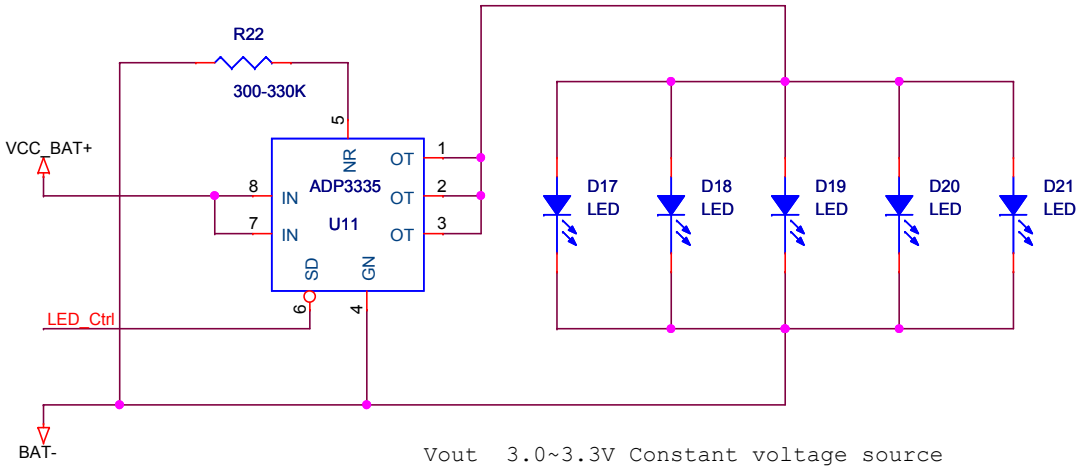

Vout 3.0~3.3V Constant voltage source

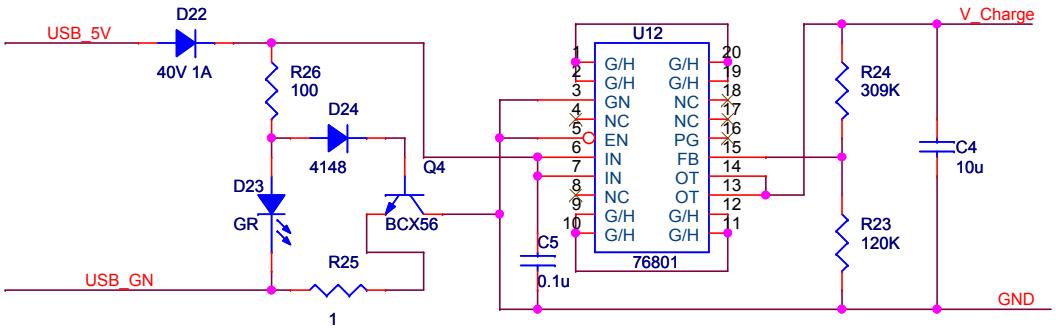

Vch=Vrf*(1+R18/R17)

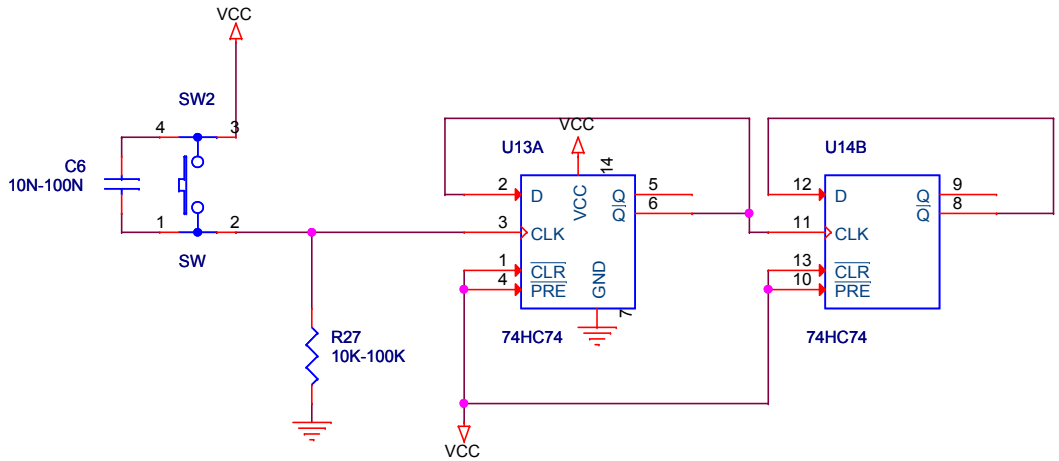

Title <Title>		
Size A4	Document Number <Doc>	Rev <RevCode>
Date: Sunday, December 24, 2017	Sheet 1 of 1	