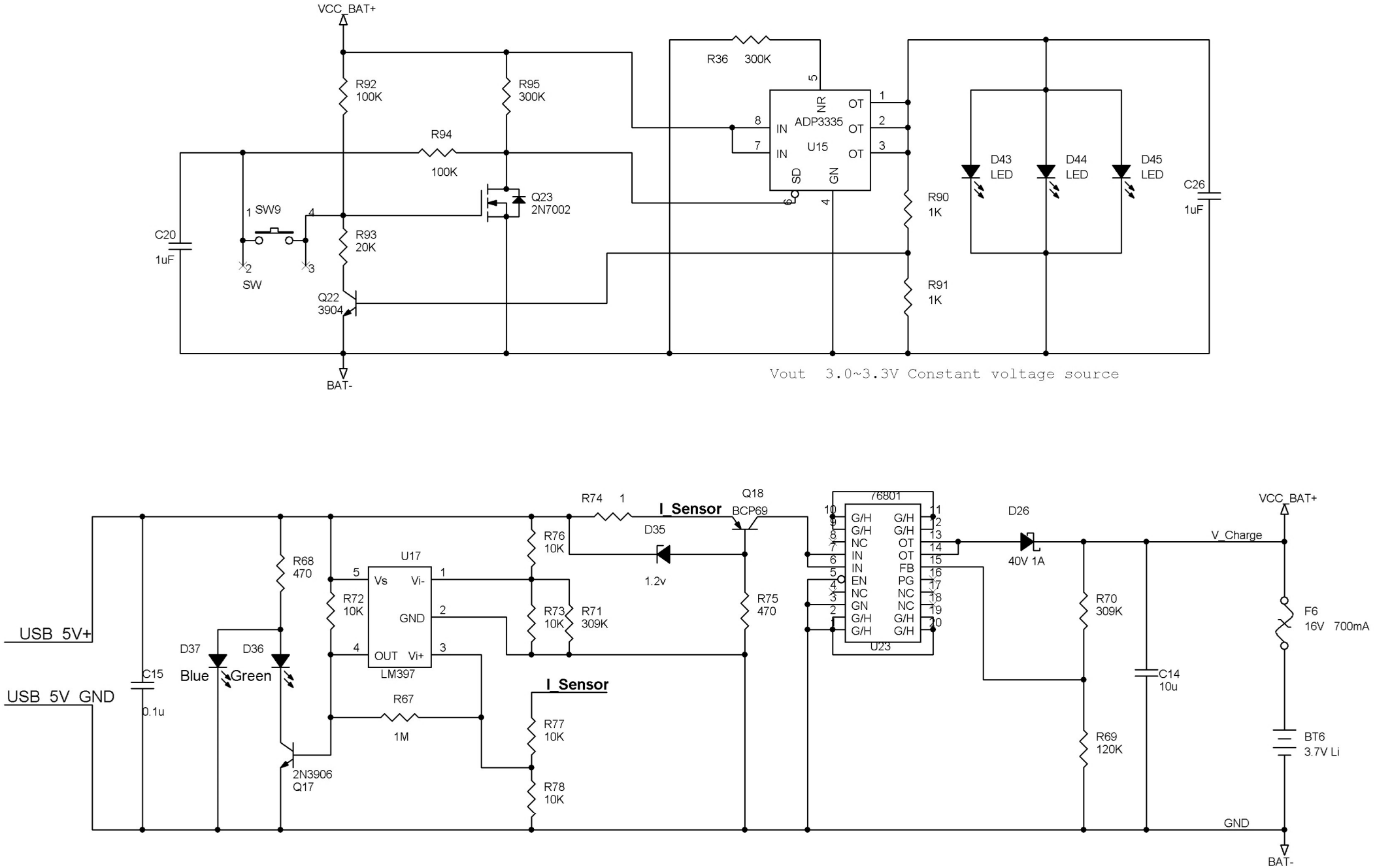

Title <Title>		
Size A4	Document Number <Doc>	Rev <Rev>
Date: Wednesday, August 08, 2012	Sheet 1 of 1	