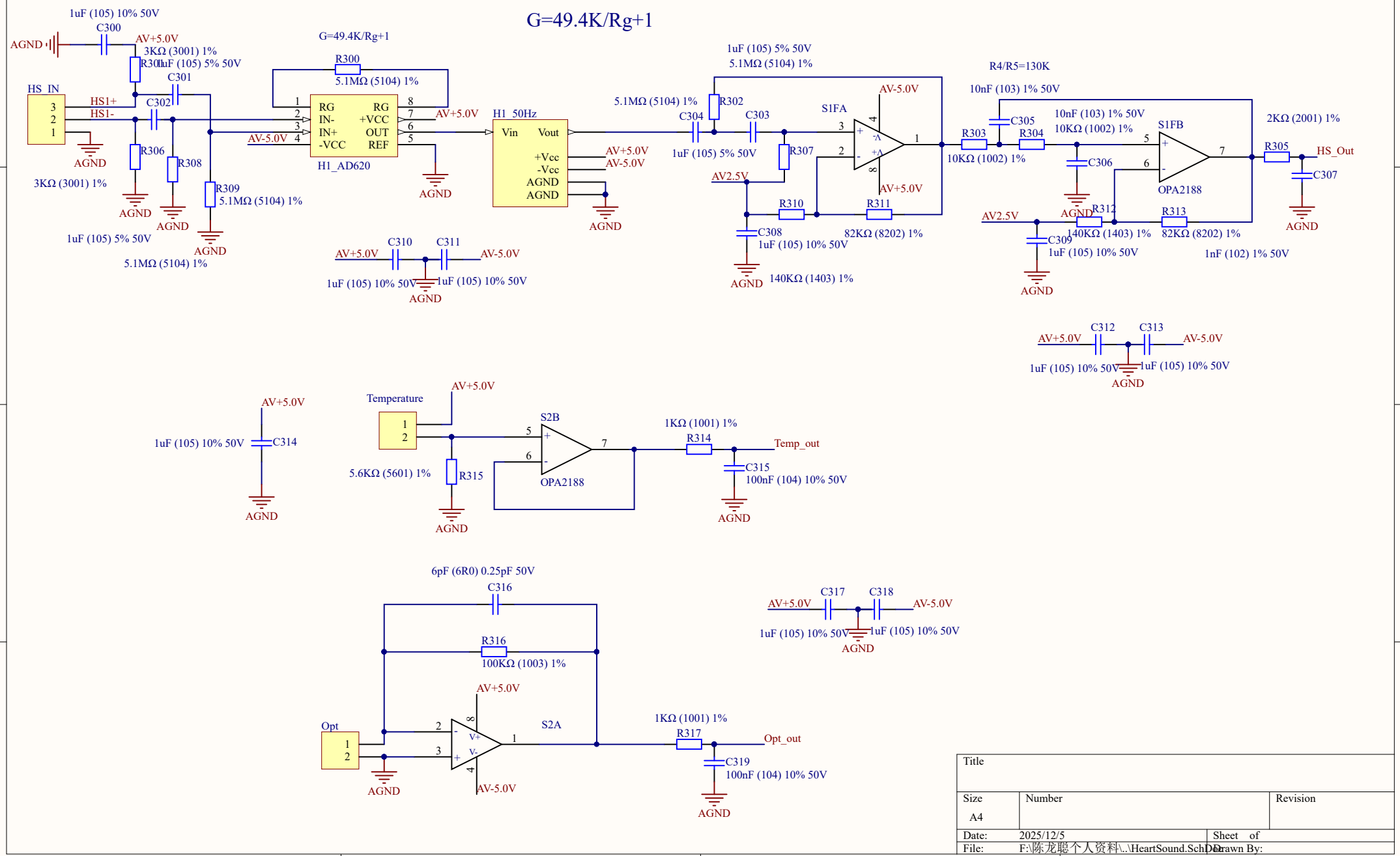

Title		
Size A4	Number	Revision
Date: 2025/12/5		Sheet of
File: F:\陈龙聪个人资料\..\HeartSound.SchDoc		Drawn By:

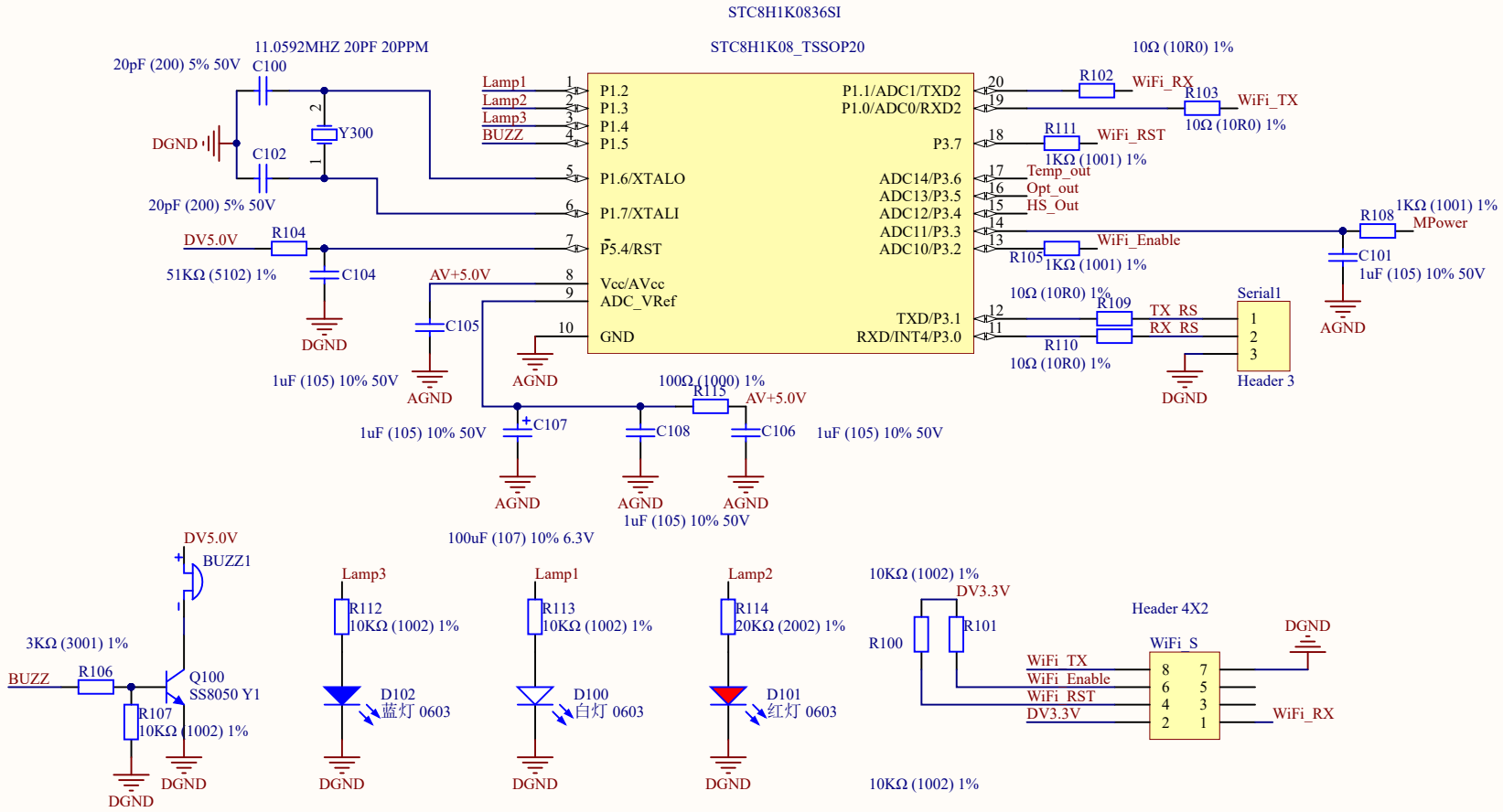

Title		
Size A4	Number	Revision
Date: 2025/12/5		Sheet of
File: F:\陈龙聪个人资料\..\Mirchip.SchDoc		Drawn By:

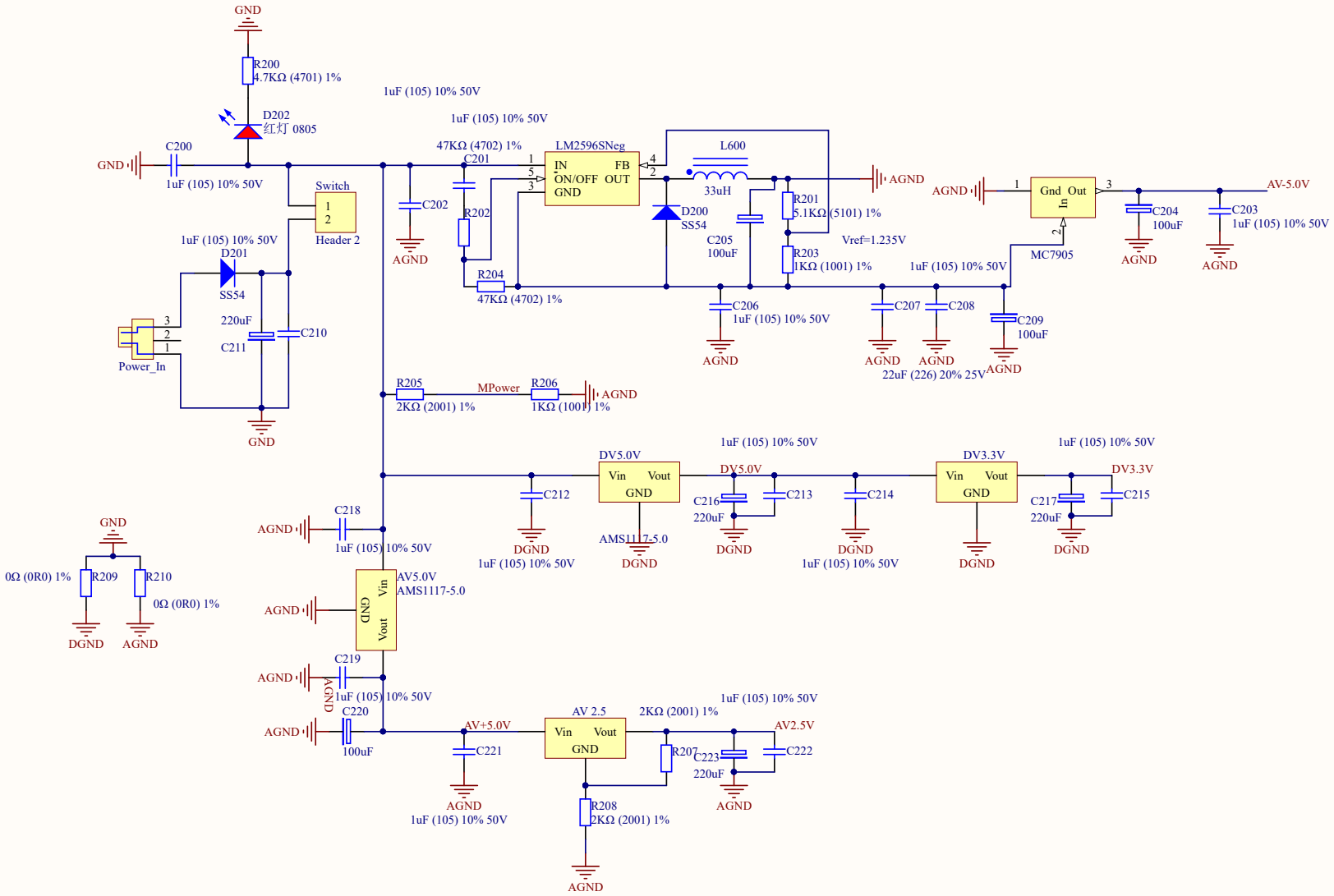

Title		
Size A4	Number	Revision
Date: 2025/12/5	Sheet of	
File: F:\陈龙聪个人资料\..\Power.SchDoc	Drawn By:	

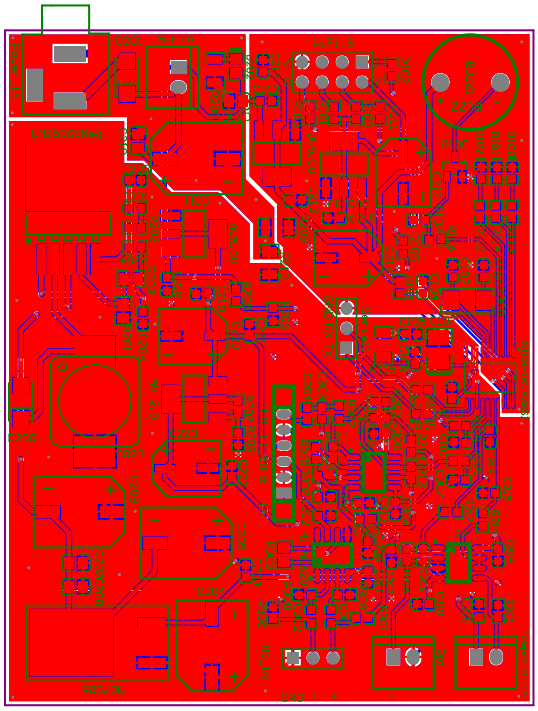
LM2596SOIC-8
SW1
D201
L201
C201
C202
C203
C204
C205
C206
C207
C208
C209
C210
C211
C212
C213
C214
C215
C216
C217
C218
C219
C220
C221
C222
C223
C224
C225
C226
C227
C228
C229
C230
C231
C232
C233
C234
C235
C236
C237
C238
C239
C240