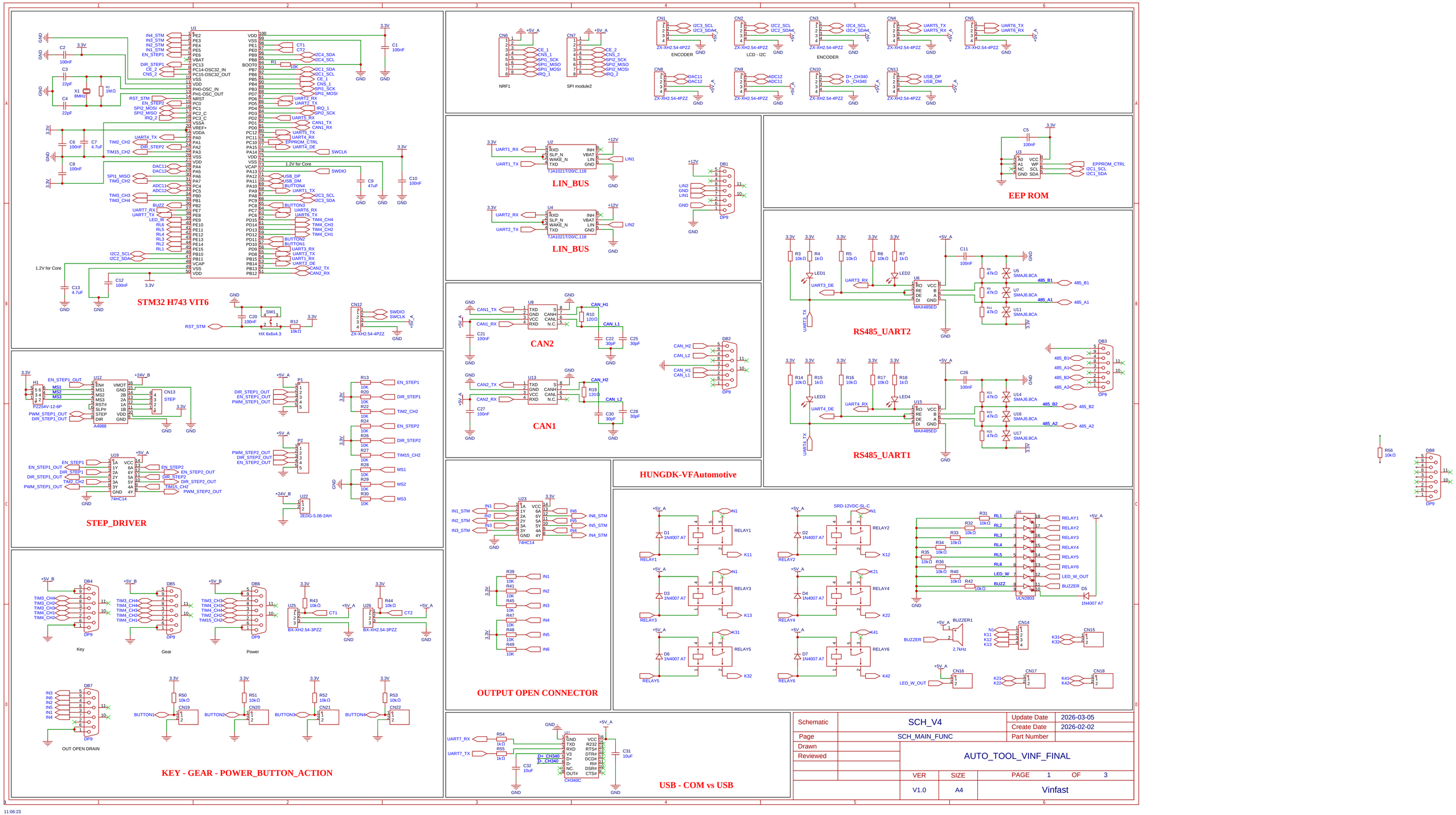

Schematic	SCH_V4	Update Date	2026-03-05
		Create Date	2026-02-02
Page	SCH_MAIN_FUNC	Part Number	
Drawn			
Reviewed			
		AUTO_TOOL_VINF_FINAL	
		VER: V1.0	SIZE: A4
		PAGE 1 OF 3	
		Vinfast	

11:06:23

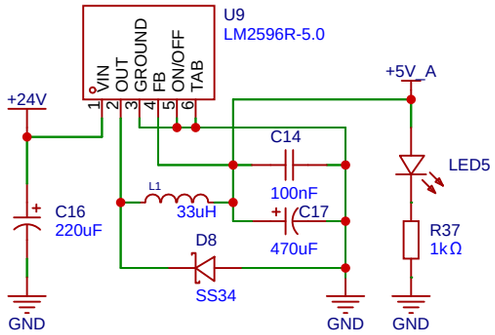

POWER3 5V for MCU Block

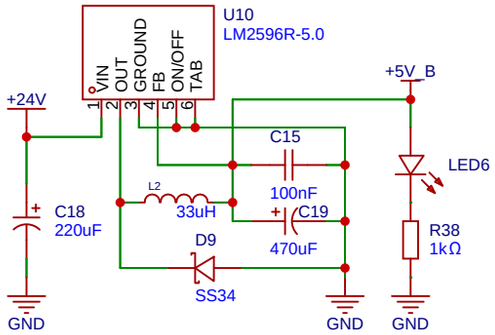

For Servo ctrl Periferal control

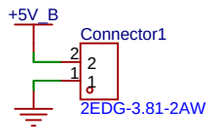

12V for LIN

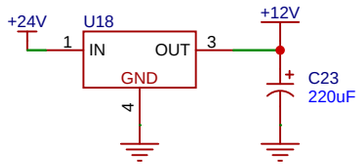

12V for LIN

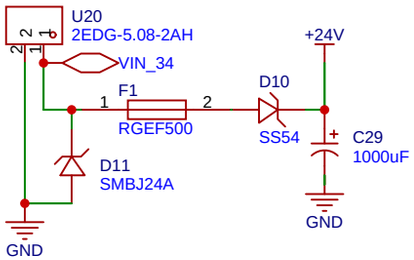

EMI Filter

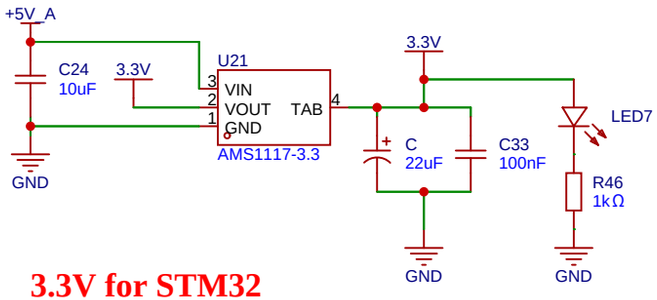

3.3V for STM32

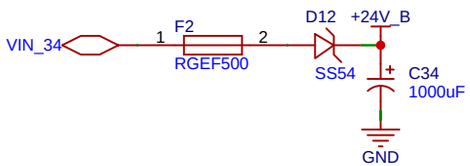

24Vol for step driver

Schematic	SCH_V4	Update Date	2026-02-02
		Create Date	2026-02-02
Page	SCH_POWER	Part Number	
Drawn		AUTO_TOOL_VINF_FINAL	
Reviewed			
		VER	SIZE	PAGE 2 OF 3
		V1.0	A4	Vinfast

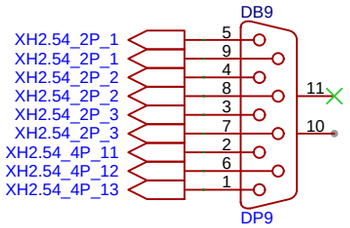

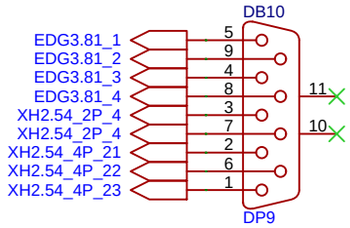

Schematic	SCH_V4		Update Date	2026-02-02
			Create Date	2026-02-02
Page	P3		Part Number	
Drawn		AUTO_TOOL_VINF_FINAL		
Reviewed				
		VER	SIZE	PAGE 3 OF 3
		V1.0	A4	Vinfast