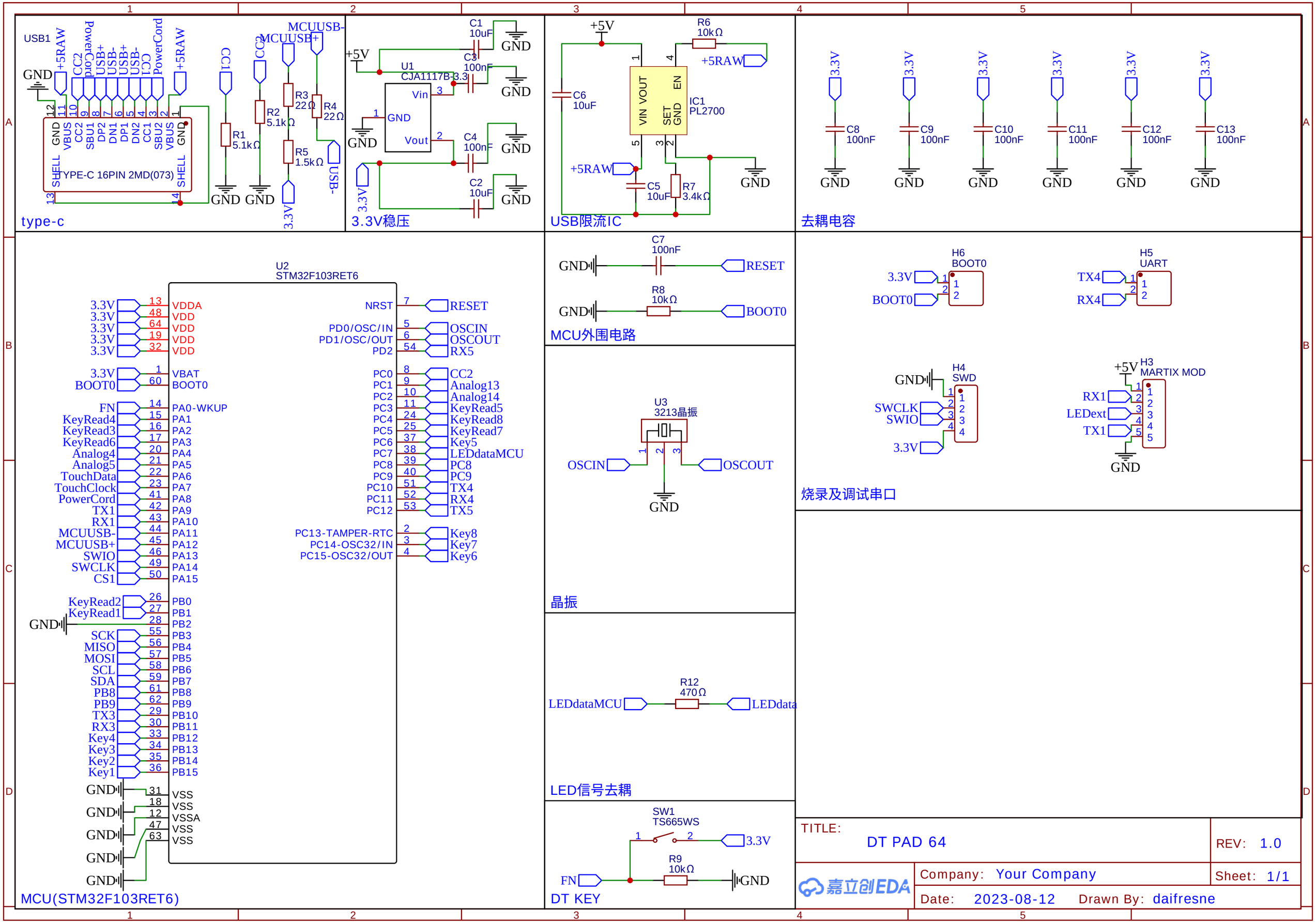
USB1
GND
+5RAW
CC2
PowerCord
USB+
USB-
USB+
USB-
CC1
PowerCord
+5RAW
GND
VBUS
CC2
SBU1
DP2
DN1
DP1
DN2
CC1
SBU2
VBUS
GND
SHELL
TYPE-C 16PIN 2MD(073)
SHELL
GND GND
CC1
R1 5.1kΩ
CC2
R2 5.1kΩ
MCUUSB-
MCUUSB+
R3 22Ω
R4 22Ω
R5 1.5kΩ
3.3V
USB-
type-c
+5V
U1
CJA1117B-3.3
Vin
GND
Vout
C1 10uF
C3 100nF
C4 100nF
C2 10uF
3.3V
3.3V稳压
+5V
R6 10kΩ
+5RAW
C6 10uF
VIN VOUT
SET GND
EN
IC1
PL2700
+5RAW
C5 10uF
R7 3.4kΩ
USB限流IC
3.3V
C8 100nF
C9 100nF
C10 100nF
C11 100nF
C12 100nF
C13 100nF
去耦电容
U2
STM32F103RET6
3.3V VDDA
3.3V VDD
3.3V VDD
3.3V VDD
3.3V VDD
3.3V VBAT
BOOT0 BOOT0
FN PA0-WKUP
KeyRead4 PA1
KeyRead3 PA2
KeyRead6 PA3
Analog4 PA4
Analog5 PA5
TouchData PA6
TouchClock PA7
PowerCord PA8
TX1 PA9
RX1 PA10
MCUUSB- PA11
MCUUSB+ PA12
SWIO PA13
SWCLK PA14
CS1 PA15
KeyRead2 PB0
KeyRead1 PB1
GND PB2
SCK PB3
MISO PB4
MOSI PB5
SCL PB6
SDA PB7
PB8 PB8
PB9 PB9
TX3 PB10
RX3 PB11
Key4 PB12
Key3 PB13
Key2 PB14
Key1 PB15
GND VSS
GND VSS
GND VSSA
GND VSS
GND VSS
GND
NRST RESET
PD0/OSC/IN OSCIN
PD1/OSC/OUT OSCOUT
PD2 RX5
PC0 CC2
PC1 Analog13
PC2 Analog14
PC3 KeyRead5
PC4 KeyRead8
PC5 KeyRead7
PC6 Key5
PC7 LEDdataMCU
PC8 PC8
PC9 PC9
PC10 TX4
PC11 RX4
PC12 TX5
PC13-TAMPER-RTC Key8
PC14-OSC32/IN Key7
PC15-OSC32/OUT Key6
MCU(STM32F103RET6)
GND
C7 100nF
RESET
GND
R8 10kΩ
BOOT0
MCU外围电路
U3
3213晶振
OSCIN
OSCOUT
GND
晶振
LEDdataMCU
R12 470Ω
LEDdata
LED信号去耦
SW1
TS665WS
3.3V
R9 10kΩ
FN
GND
DT KEY
H6
BOOT0
3.3V
BOOT0
H5
UART
TX4
RX4
H4
SWD
GND
SWCLK
SWIO
3.3V
+5V
H3
MARTIX MOD
RX1
LEDext
TX1
GND
烧录及调试串口
TITLE:
DT PAD 64
REV: 1.0
Company: Your Company
Sheet: 1/1
Date: 2023-08-12
Drawn By: daifresne
嘉立创EDA