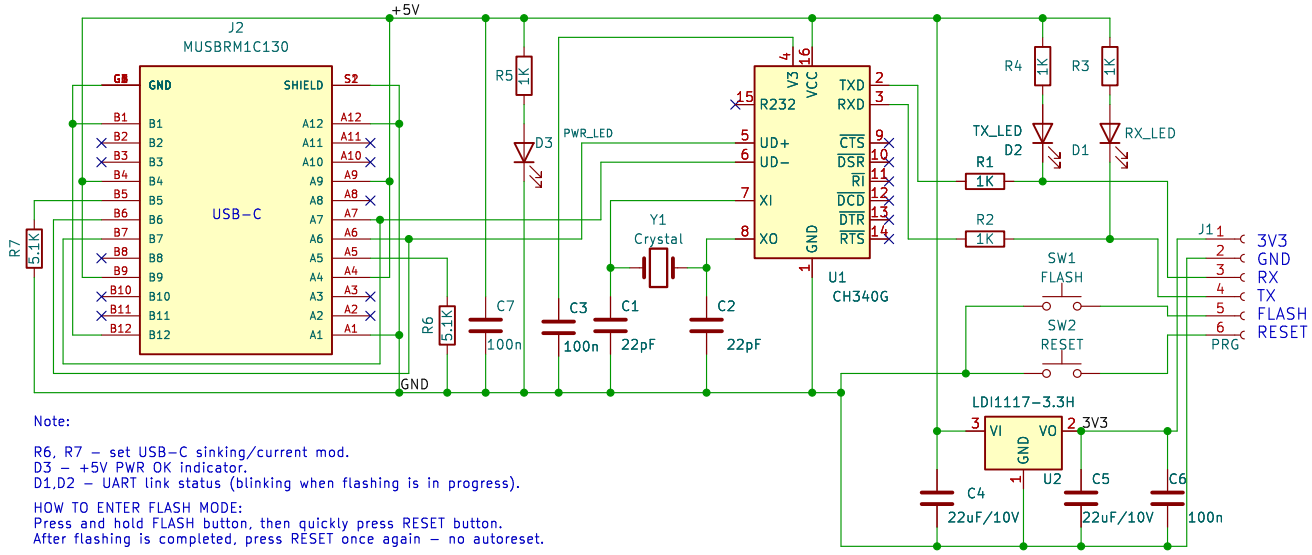

Note:

R6, R7 – set USB-C sinking/current mod.
D3 – +5V PWR OK indicator.
D1,D2 – UART link status (blinking when flashing is in progress).

HOW TO ENTER FLASH MODE:
Press and hold FLASH button, then quickly press RESET button.
After flashing is completed, press RESET once again – no autoreset.

F_Board V1.1

Sheet: /
File: F_Board_V1.1.kicad_sch

Title: Programmer for ESP8266

Size: A4	Date: 10.5. 2023 D. Novák	**Rev:** 1.1 (REV:A)
KiCad E.D.A. kicad 7.0.6		Id: 1/1