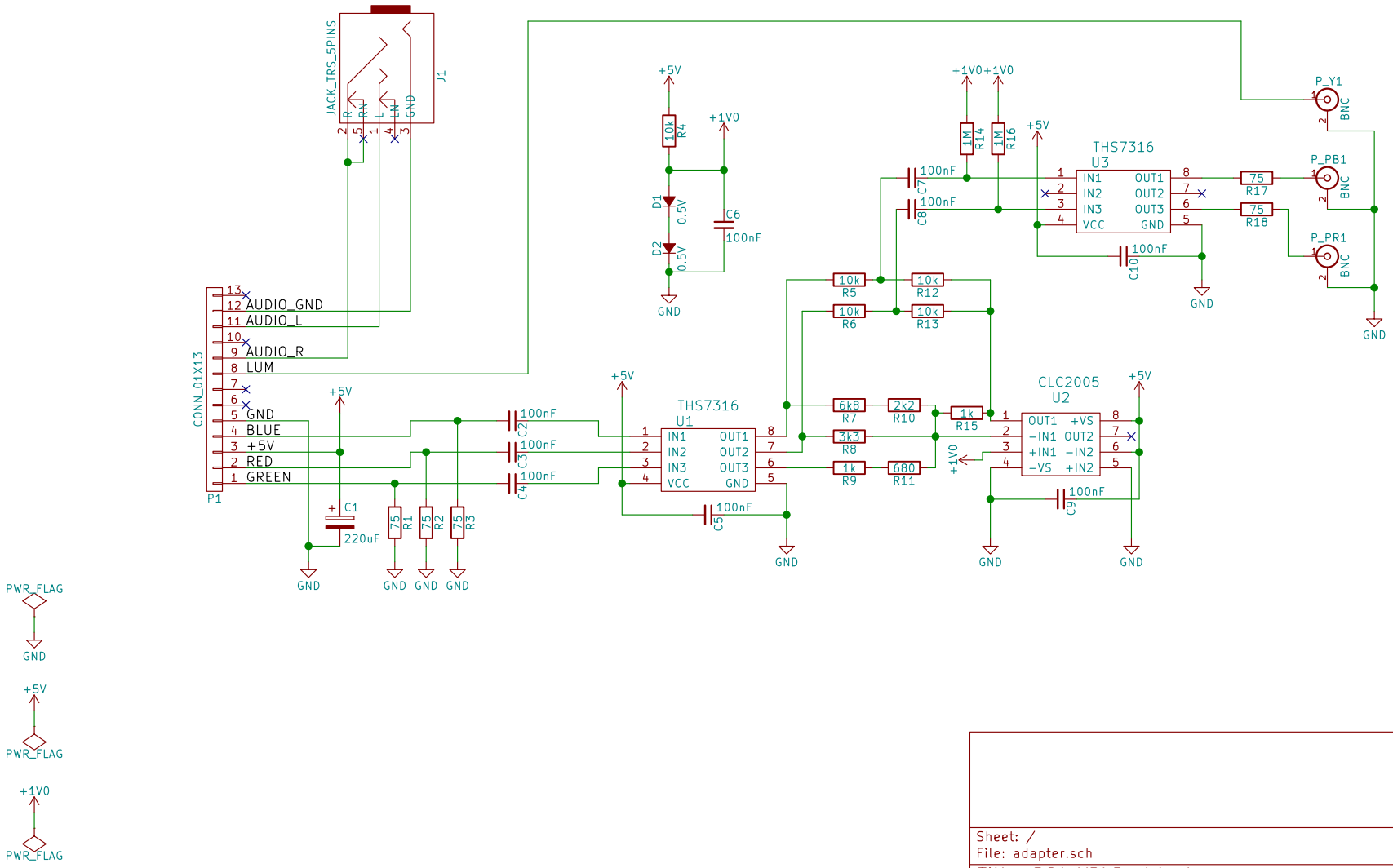

Sheet: /
File: adapter.sch

Title: PS1 YPbPr Adapter

Size: A4	Date:	Rev: 1.0
KiCad E.D.A. kicad 4.0.4-stable		Id: 1/1