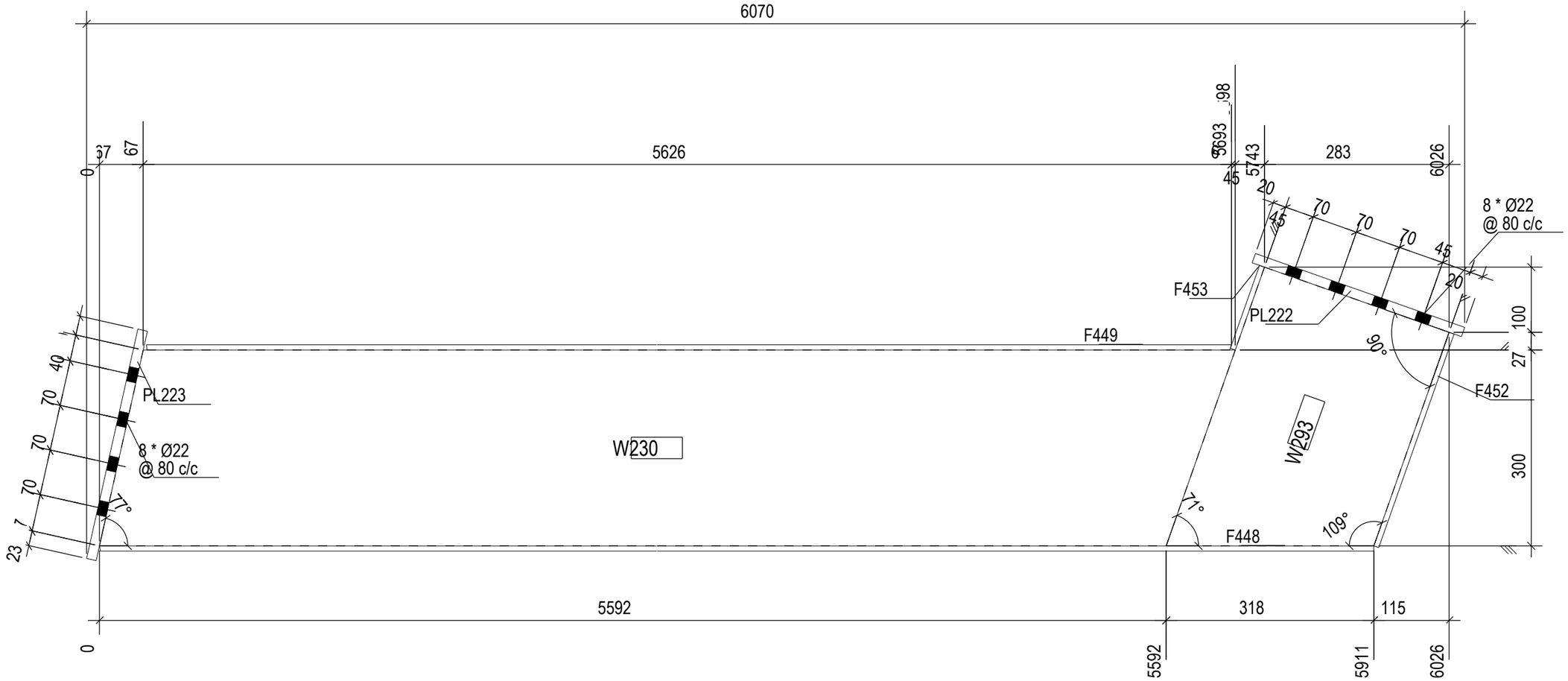

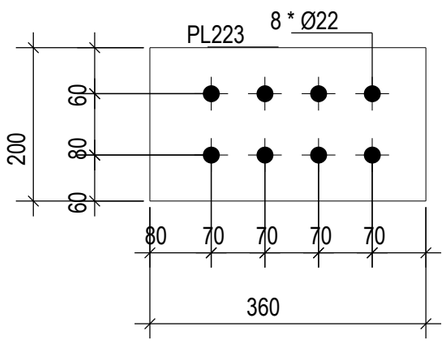

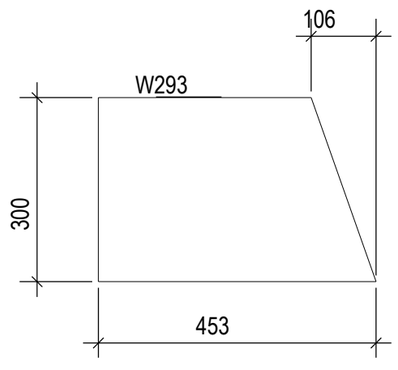

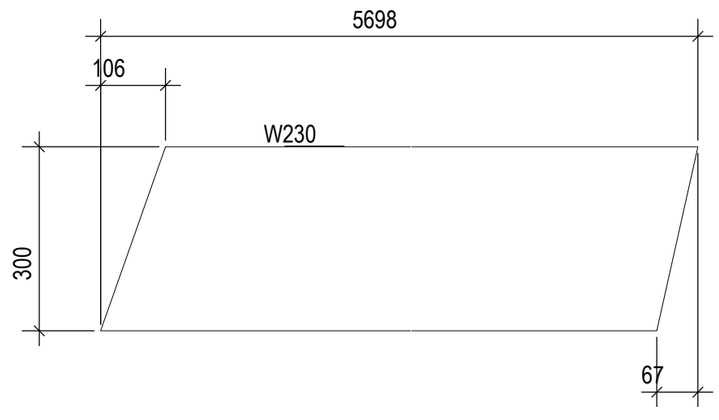

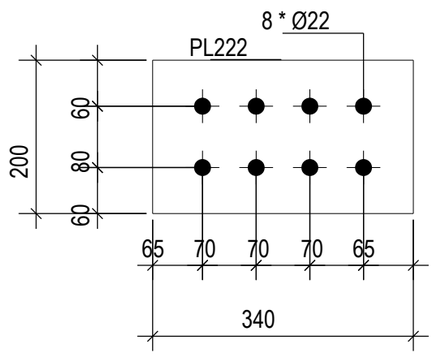

MKD : K2

Tekla structures