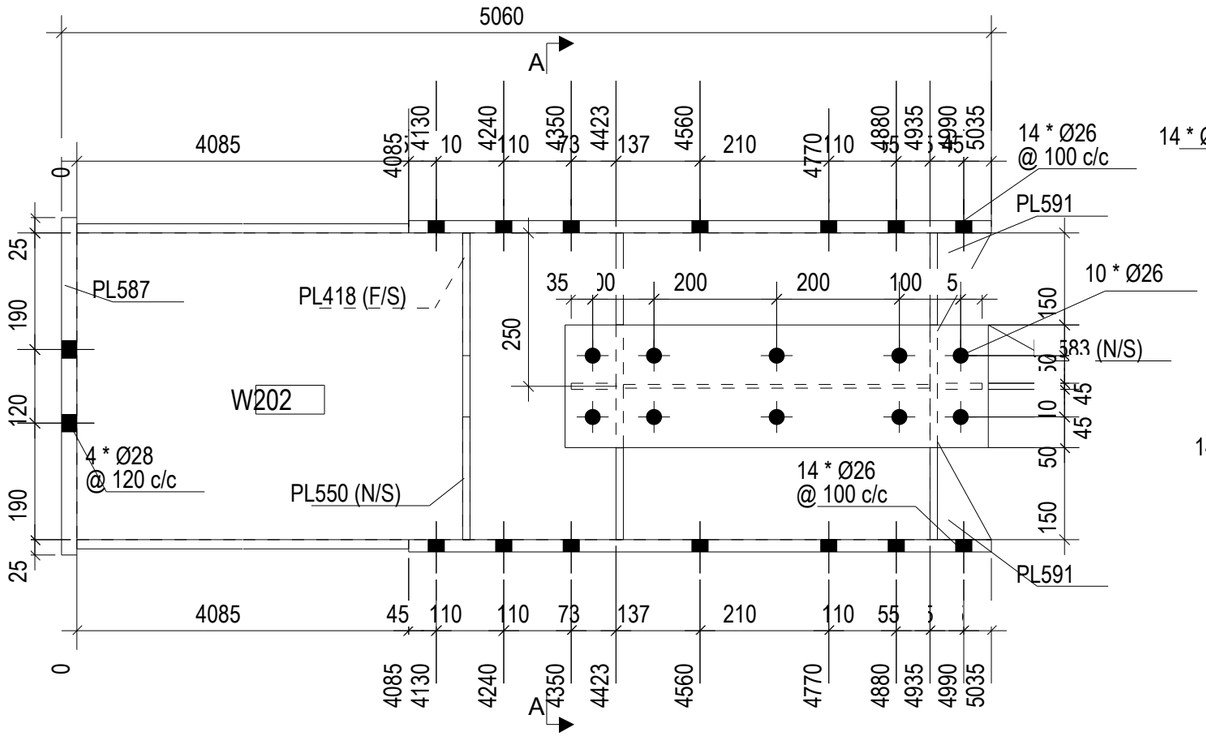

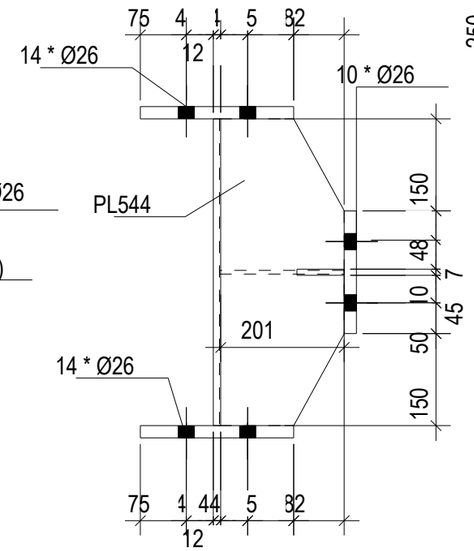

SEC A
1:10

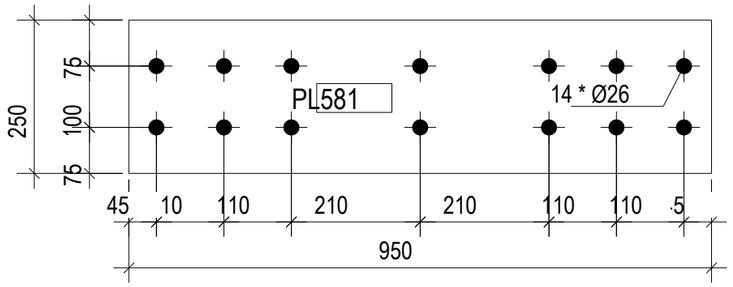

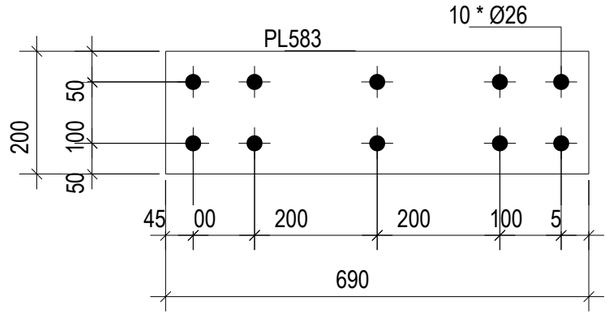

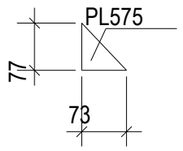

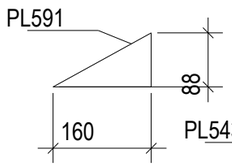

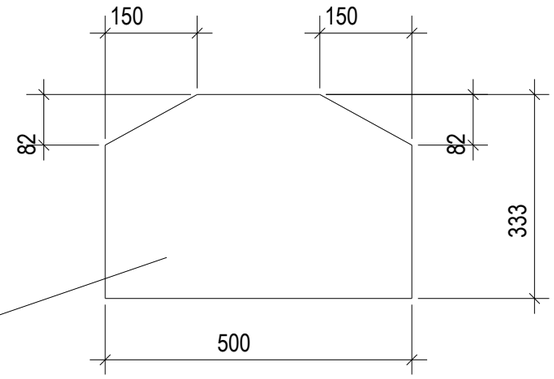

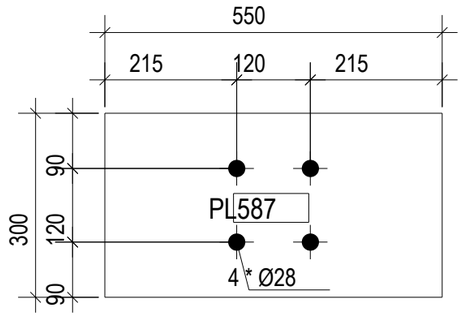

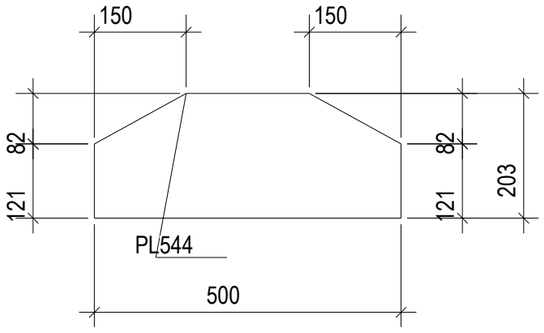

QTY= 3 Nos. MEZZ.COLUMN MKD : MC501

M