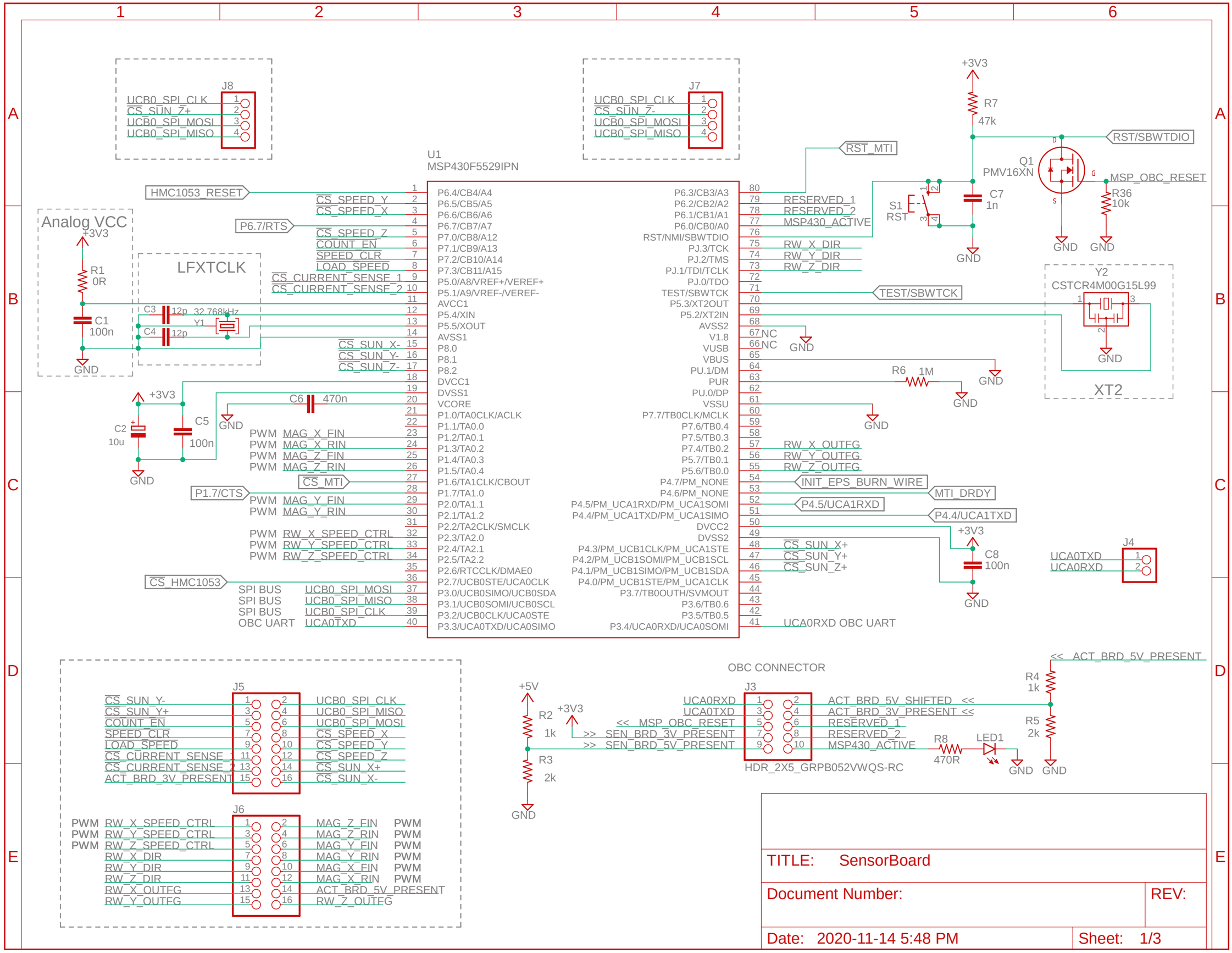
J8
UCB0_SPI_CLK
CS_SUN_Z+
UCB0_SPI_MOSI
UCB0_SPI_MISO
J7
UCB0_SPI_CLK
CS_SUN_Z-
UCB0_SPI_MOSI
UCB0_SPI_MISO
U1
MSP430F5529IPN
HMC1053_RESET
CS_SPEED_Y
CS_SPEED_X
P6.7/RTS
CS_SPEED_Z
COUNT_EN
SPEED_CLR
LOAD_SPEED
CS_CURRENT_SENSE_1
CS_CURRENT_SENSE_2
CS_SUN_X-
CS_SUN_Y-
CS_SUN_Z-
PWM MAG_X_FIN
PWM MAG_X_RIN
PWM MAG_Z_FIN
PWM MAG_Z_RIN
CS_MTI
P1.7/CTS
PWM MAG_Y_FIN
PWM MAG_Y_RIN
PWM RW_X_SPEED_CTRL
PWM RW_Y_SPEED_CTRL
PWM RW_Z_SPEED_CTRL
CS_HMC1053
SPI BUS UCB0_SPI_MOSI
SPI BUS UCB0_SPI_MISO
SPI BUS UCB0_SPI_CLK
OBC UART UCA0TXD
P6.4/CB4/A4
P6.5/CB5/A5
P6.6/CB6/A6
P6.7/CB7/A7
P7.0/CB8/A12
P7.1/CB9/A13
P7.2/CB10/A14
P7.3/CB11/A15
P5.0/A8/VREF+/VEREF+
P5.1/A9/VREF-/VEREF-
AVCC1
P5.4/XIN
P5.5/XOUT
AVSS1
P8.0
P8.1
P8.2
DVCC1
DVSS1
VCORE
P1.0/TA0CLK/ACLK
P1.1/TA0.0
P1.2/TA0.1
P1.3/TA0.2
P1.4/TA0.3
P1.5/TA0.4
P1.6/TA1CLK/CBOUT
P1.7/TA1.0
P2.0/TA1.1
P2.1/TA1.2
P2.2/TA2CLK/SMCLK
P2.3/TA2.0
P2.4/TA2.1
P2.5/TA2.2
P2.6/RTCCLK/DMAE0
P2.7/UCB0STE/UCA0CLK
P3.0/UCB0SIMO/UCB0SDA
P3.1/UCB0SOMI/UCB0SCL
P3.2/UCB0CLK/UCA0STE
P3.3/UCA0TXD/UCA0SIMO
P6.3/CB3/A3
P6.2/CB2/A2
P6.1/CB1/A1
P6.0/CB0/A0
RST/NMI/SBWTDIO
PJ.3/TCK
PJ.2/TMS
PJ.1/TDI/TCLK
PJ.0/TDO
TEST/SBWTCK
P5.3/XT2OUT
P5.2/XT2IN
AVSS2
V1.8
VUSB
VBUS
PU.1/DM
PUR
PU.0/DP
VSSU
P7.7/TB0CLK/MCLK
P7.6/TB0.4
P7.5/TB0.3
P7.4/TB0.2
P5.7/TB0.1
P5.6/TB0.0
P4.7/PM_NONE
P4.6/PM_NONE
P4.5/PM_UCA1RXD/PM_UCA1SOMI
P4.4/PM_UCA1TXD/PM_UCA1SIMO
DVCC2
DVSS2
P4.3/PM_UCB1CLK/PM_UCA1STE
P4.2/PM_UCB1SOMI/PM_UCB1SCL
P4.1/PM_UCB1SIMO/PM_UCB1SDA
P4.0/PM_UCB1STE/PM_UCA1CLK
P3.7/TB0OUTH/SVMOUT
P3.6/TB0.6
P3.5/TB0.5
P3.4/UCA0RXD/UCA0SOMI
RST_MTI
RESERVED_1
RESERVED_2
MSP430_ACTIVE
RW_X_DIR
RW_Y_DIR
RW_Z_DIR
TEST/SBWTCK
NC
NC
RW_X_OUTFG
RW_Y_OUTFG
RW_Z_OUTFG
INIT_EPS_BURN_WIRE
MTI_DRDY
P4.5/UCA1RXD
P4.4/UCA1TXD
CS_SUN_X+
CS_SUN_Y+
CS_SUN_Z+
UCA0RXD OBC UART
Analog VCC
+3V3
R1
0R
C1
100n
GND
LFXTCLK
C3
12p
32.768kHz
Y1
C4
12p
+3V3
C2
10u
C5
100n
GND
C6
470n
GND
R7
47k
+3V3
RST/SBWTDIO
Q1
PMV16XN
MSP_OBC_RESET
R36
10k
S1
RST
C7
1n
GND
GND
GND
Y2
CSTCR4M00G15L99
GND
XT2
R6
1M
GND
GND
GND
+3V3
C8
100n
GND
J4
UCA0TXD
UCA0RXD
J5
CS_SUN_Y-
CS_SUN_Y+
COUNT_EN
SPEED_CLR
LOAD_SPEED
CS_CURRENT_SENSE_1
CS_CURRENT_SENSE_2
ACT_BRD_3V_PRESENT
UCB0_SPI_CLK
UCB0_SPI_MISO
UCB0_SPI_MOSI
CS_SPEED_X
CS_SPEED_Y
CS_SPEED_Z
CS_SUN_X+
CS_SUN_X-
J6
PWM RW_X_SPEED_CTRL
PWM RW_Y_SPEED_CTRL
PWM RW_Z_SPEED_CTRL
RW_X_DIR
RW_Y_DIR
RW_Z_DIR
RW_X_OUTFG
RW_Y_OUTFG
MAG_Z_FIN PWM
MAG_Z_RIN PWM
MAG_Y_FIN PWM
MAG_X_FIN PWM
MAG_X_RIN PWM
ACT_BRD_5V_PRESENT
RW_Z_OUTFG
OBC CONNECTOR
J3
+5V
R2
1k
+3V3
R3
2k
GND
UCA0RXD
UCA0TXD
<< MSP_OBC_RESET
>> SEN_BRD_3V_PRESENT
>> SEN_BRD_5V_PRESENT
ACT_BRD_5V_SHIFTED <<
ACT_BRD_3V_PRESENT <<
RESERVED_1
RESERVED_2
MSP430_ACTIVE
HDR_2X5_GRPB052VWQS-RC
R8
470R
LED1
GND
<< ACT_BRD_5V_PRESENT
R4
1k
R5
2k
GND
TITLE: SensorBoard
Document Number:
REV:
Date: 2020-11-14 5:48 PM
Sheet: 1/3

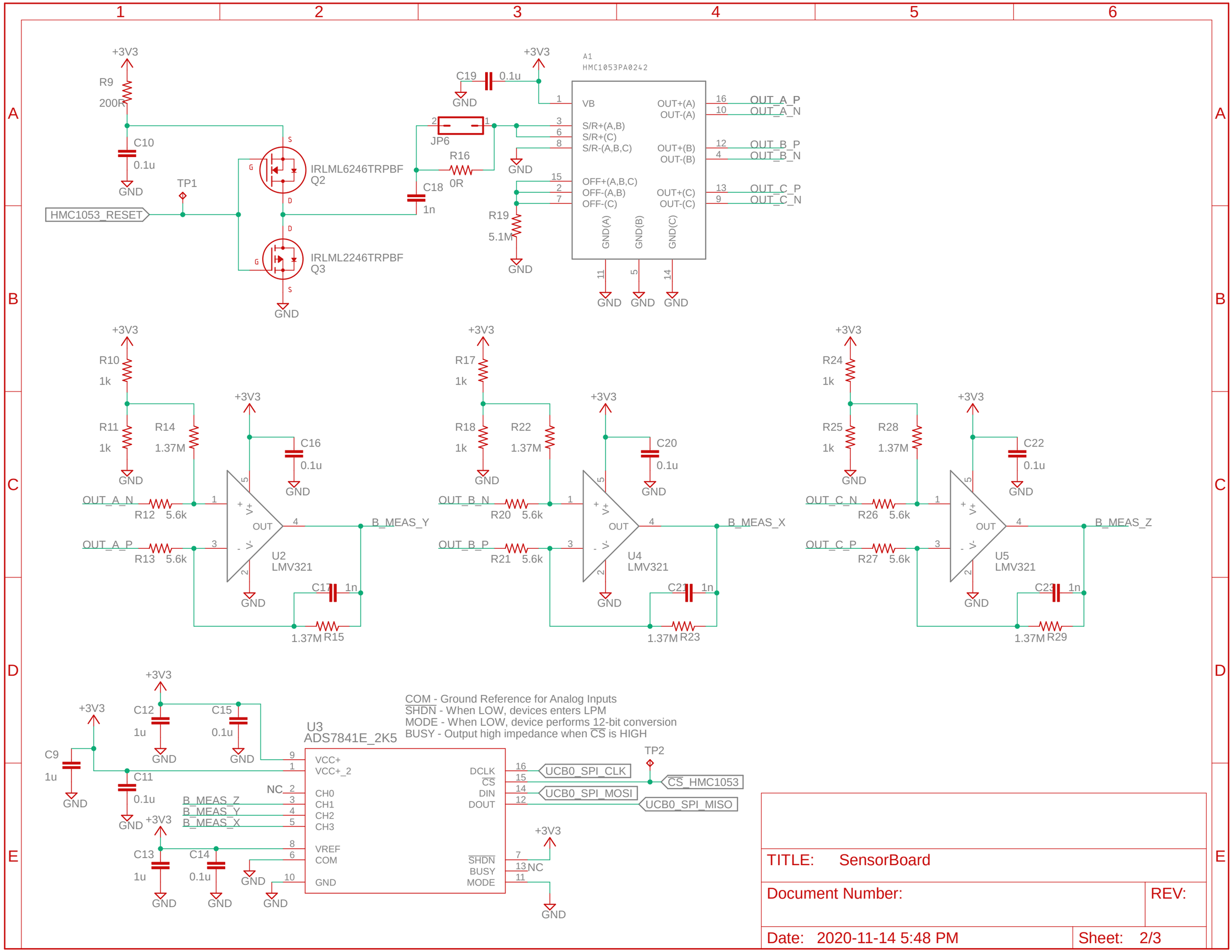

TITLE: SensorBoard	
Document Number:	REV:
Date: 2020-11-14 5:48 PM	Sheet: 2/3

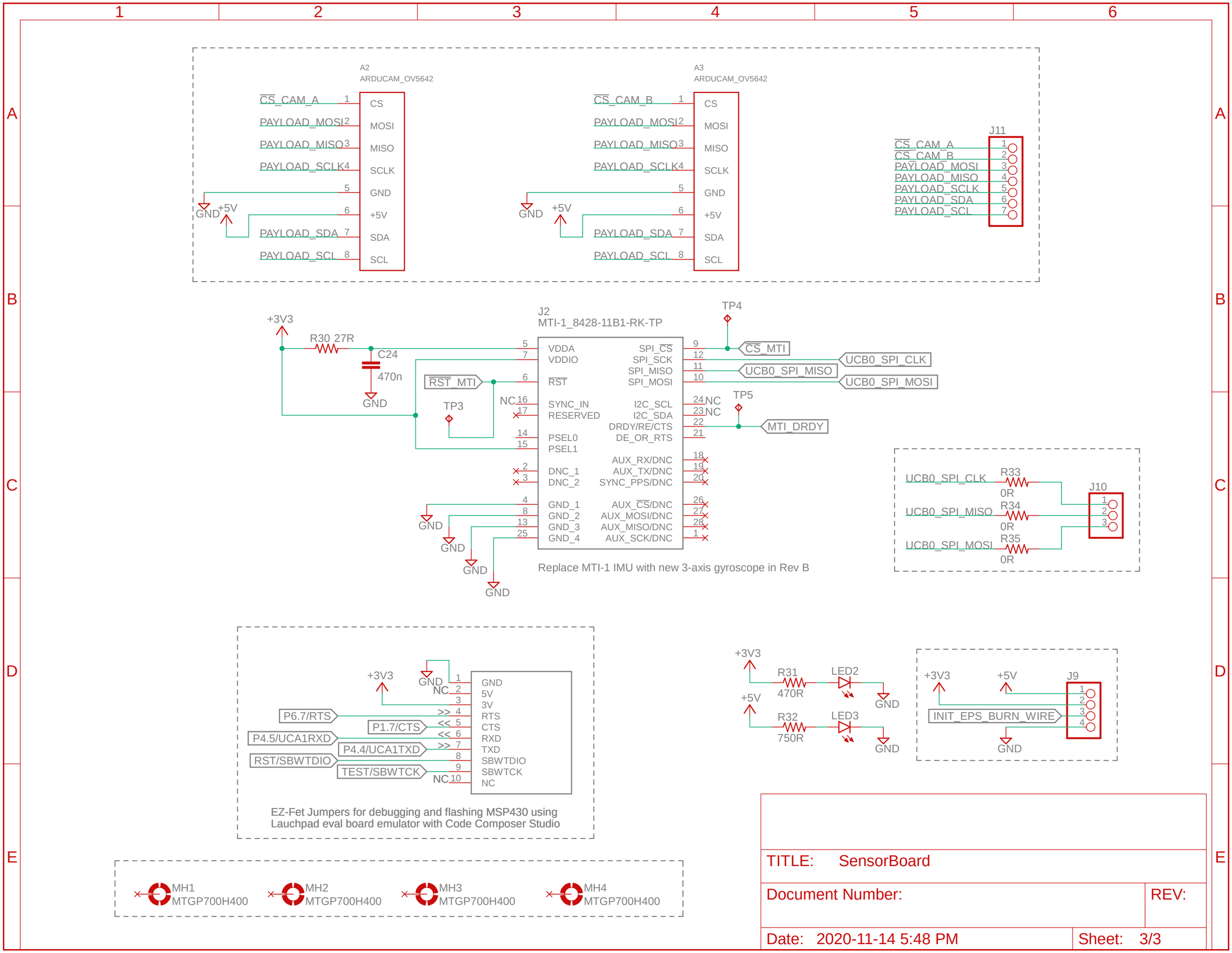
A2
ARDUCAM_OV5642
CS_CAM_A
PAYLOAD_MOSI
PAYLOAD_MISO
PAYLOAD_SCLK
PAYLOAD_SDA
PAYLOAD_SCL
CS
MOSI
MISO
SCLK
GND
+5V
SDA
SCL
A3
ARDUCAM_OV5642
CS_CAM_B
J11
PAYLOAD_SDA
PAYLOAD_SCL
+3V3
R30 27R
C24
470n
J2
MTI-1_8428-11B1-RK-TP
VDDA
VDDIO
RST
SYNC_IN
RESERVED
PSEL0
PSEL1
DNC_1
DNC_2
GND_1
GND_2
GND_3
GND_4
SPI_CS
SPI_SCK
SPI_MISO
SPI_MOSI
I2C_SCL
I2C_SDA
DRDY/RE/CTS
DE_OR_RTS
AUX_RX/DNC
AUX_TX/DNC
SYNC_PPS/DNC
AUX_CS/DNC
AUX_MOSI/DNC
AUX_MISO/DNC
AUX_SCK/DNC
RST_MTI
TP3
TP4
TP5
CS_MTI
UCB0_SPI_CLK
UCB0_SPI_MISO
UCB0_SPI_MOSI
MTI_DRDY
NC
Replace MTI-1 IMU with new 3-axis gyroscope in Rev B
R33
R34
R35
0R
J10
P6.7/RTS
P1.7/CTS
P4.5/UCA1RXD
P4.4/UCA1TXD
RST/SBWTDIO
TEST/SBWTCK
5V
3V
RTS
CTS
RXD
TXD
SBWTDIO
SBWTCK
EZ-Fet Jumpers for debugging and flashing MSP430 using
Lauchpad eval board emulator with Code Composer Studio
R31
470R
R32
750R
LED2
LED3
J9
INIT_EPS_BURN_WIRE
MH1
MTGP700H400
MH2
MTGP700H400
MH3
MTGP700H400
MH4
MTGP700H400
TITLE: SensorBoard
Document Number:
REV:
Date: 2020-11-14 5:48 PM
Sheet: 3/3