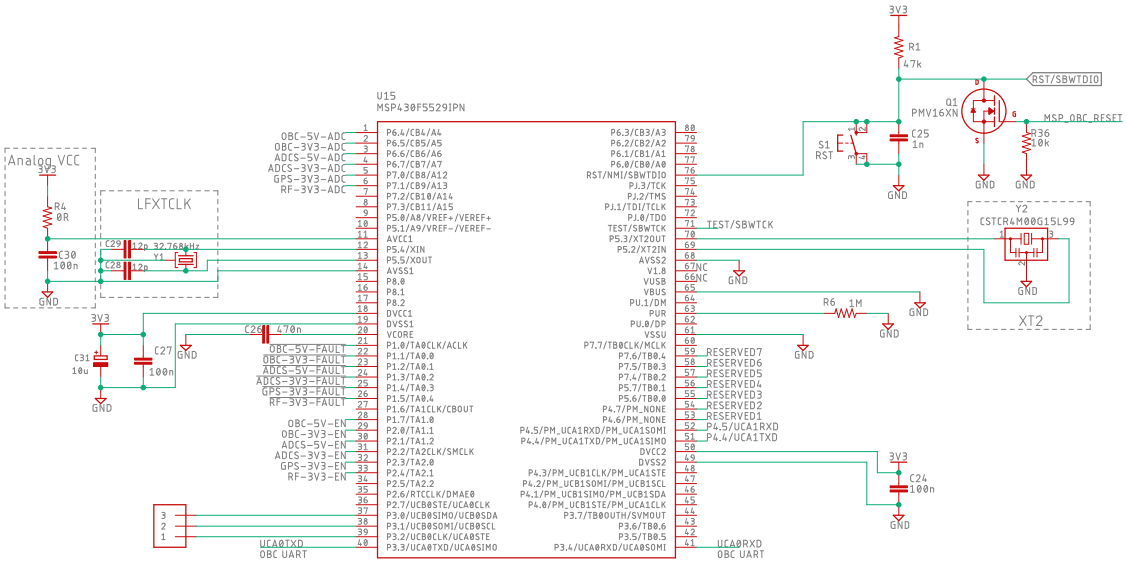

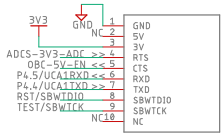

EZ-Fet Jumpers for debugging and flashing MSP430 using Lauchpad eval board emulator with Code Composer Studio

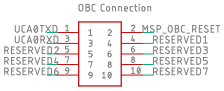

MSP430 circuitry

TITLE: PDUv1	
Document Number:	REV:
Date: 3/10/2021 5:23 PM	Sheet: 1/4

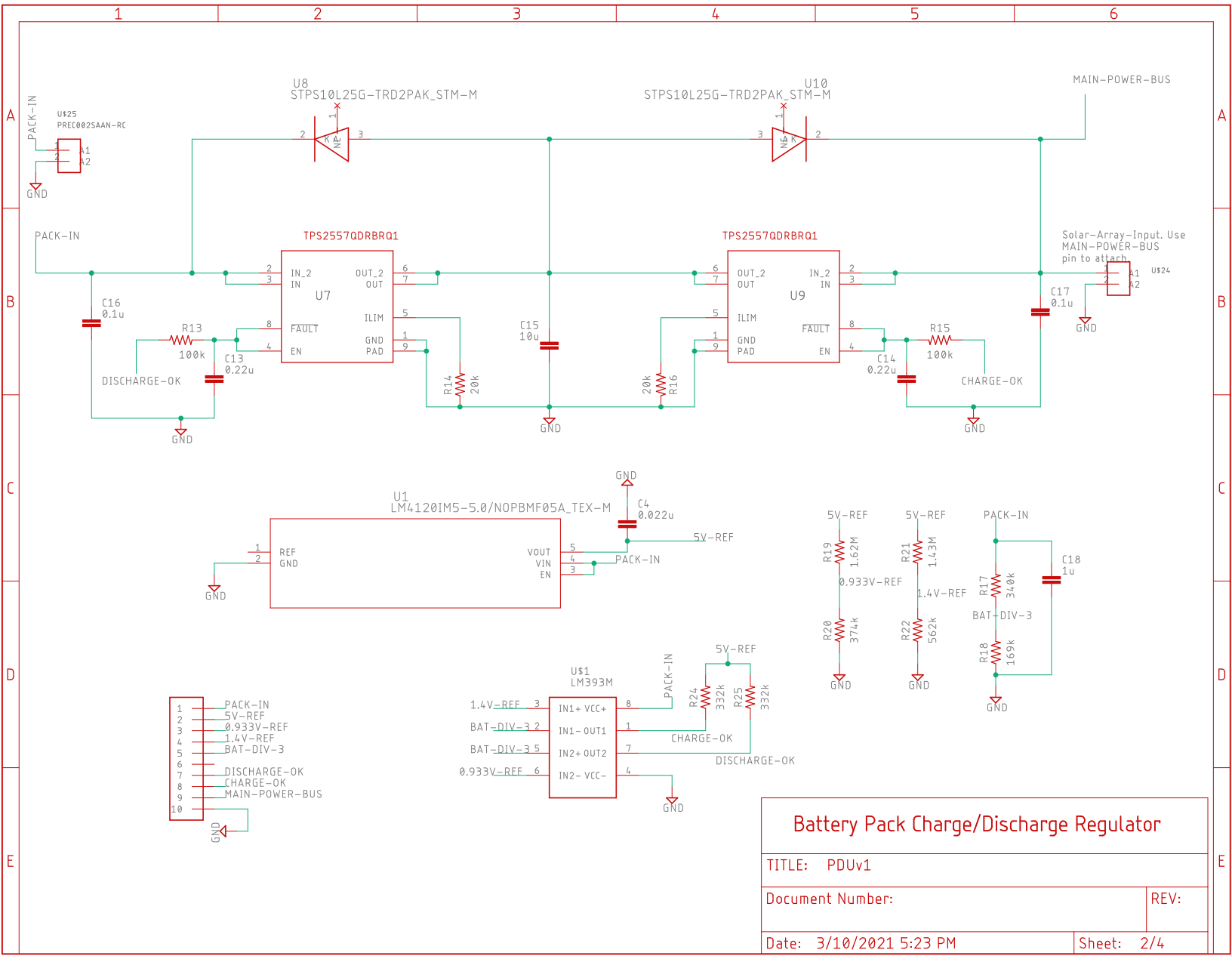

Battery Pack Charge/Discharge Regulator

TITLE: PDUv1	
Document Number:	REV:
Date: 3/10/2021 5:23 PM	Sheet: 2/4

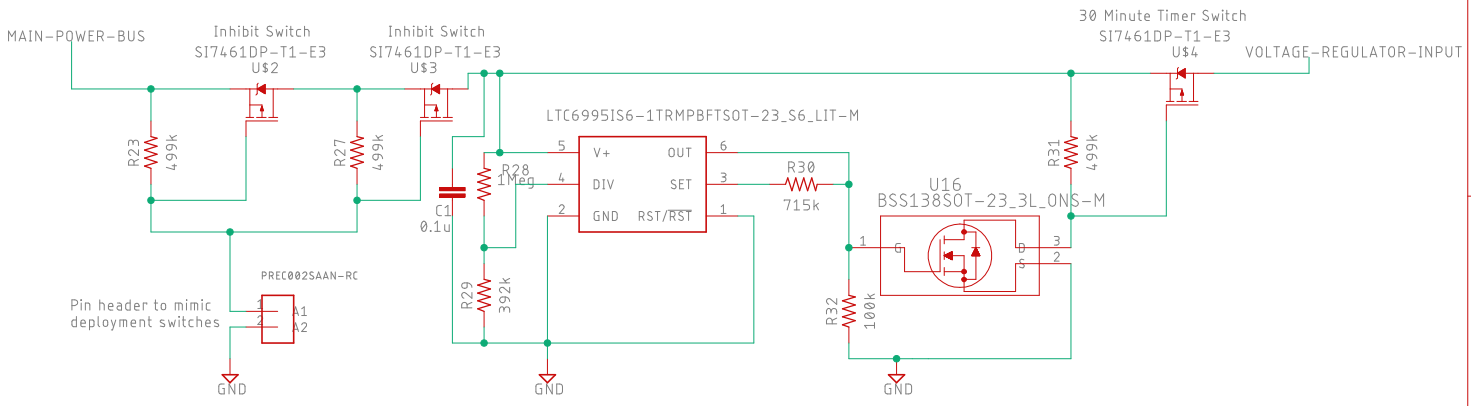

Load Side Inhibit Switches, 30 Minute Timer and System Switch

PDUv1

3/10/2021 5:23 PM

Sheet: 3/4

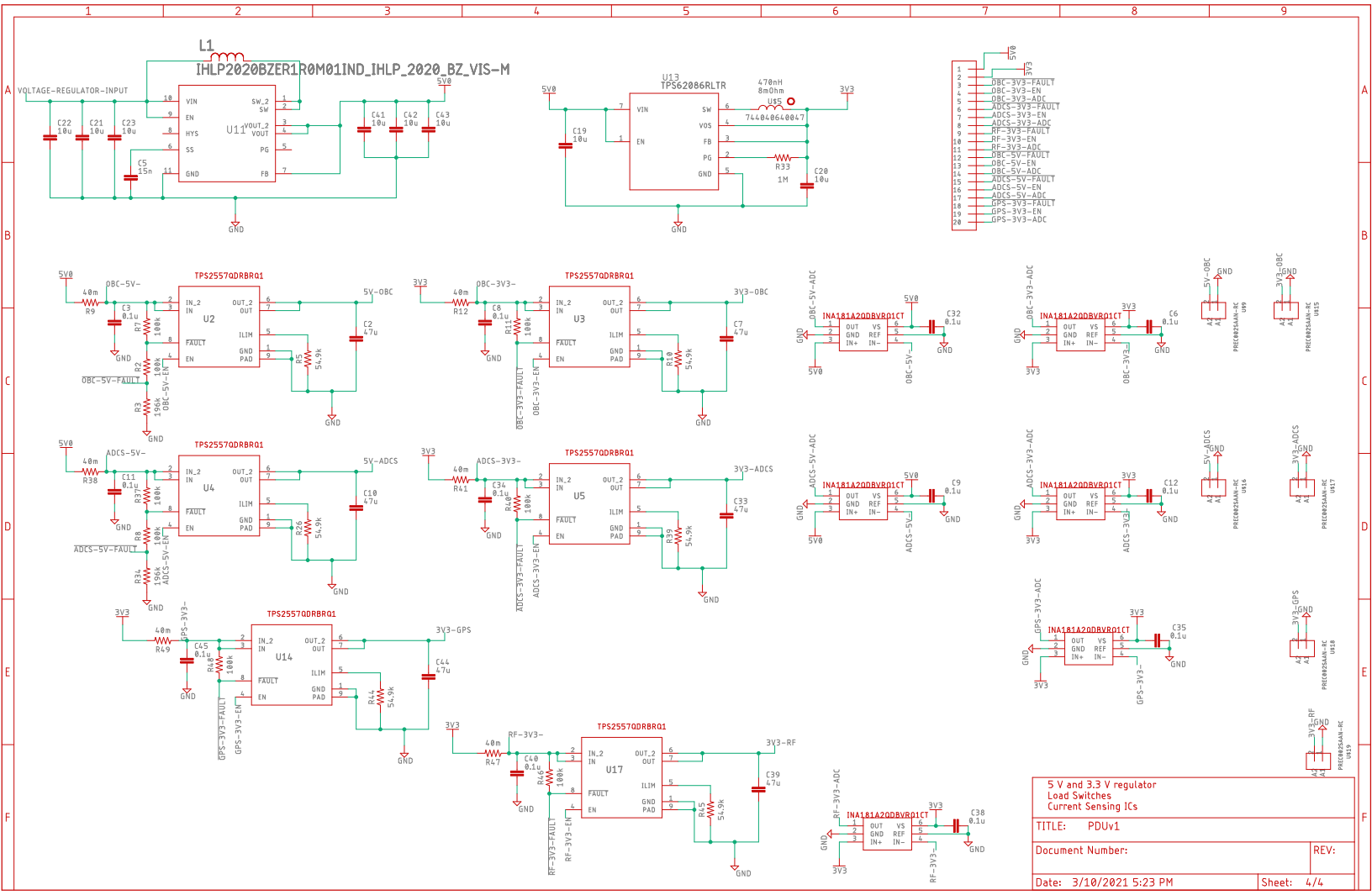
L1
IHLP2020BZER1R0M01IND_IHLP_2020_BZ_VIS-M
VOLTAGE-REGULATOR-INPUT
U11
U13
TPS62086RLTR
U15
470nH
8mOhm
744040640047
TPS2557QDRBRQ1
U2
U3
U4
U5
U14
U17
INA181A2QDBVRQ1CT
5V-OBC
3V3-OBC
5V-ADCS
3V3-ADCS
3V3-GPS
3V3-RF
OBC-5V-FAULT
OBC-3V3-FAULT
ADCS-5V-FAULT
ADCS-3V3-FAULT
GPS-3V3-FAULT
RF-3V3-FAULT
OBC-3V3-ADC
ADCS-3V3-ADC
GPS-3V3-ADC
RF-3V3-ADC
5 V and 3.3 V regulator
Load Switches
Current Sensing ICs
TITLE: PDUv1
Document Number:
REV:
Date: 3/10/2021 5:23 PM
Sheet: 4/4