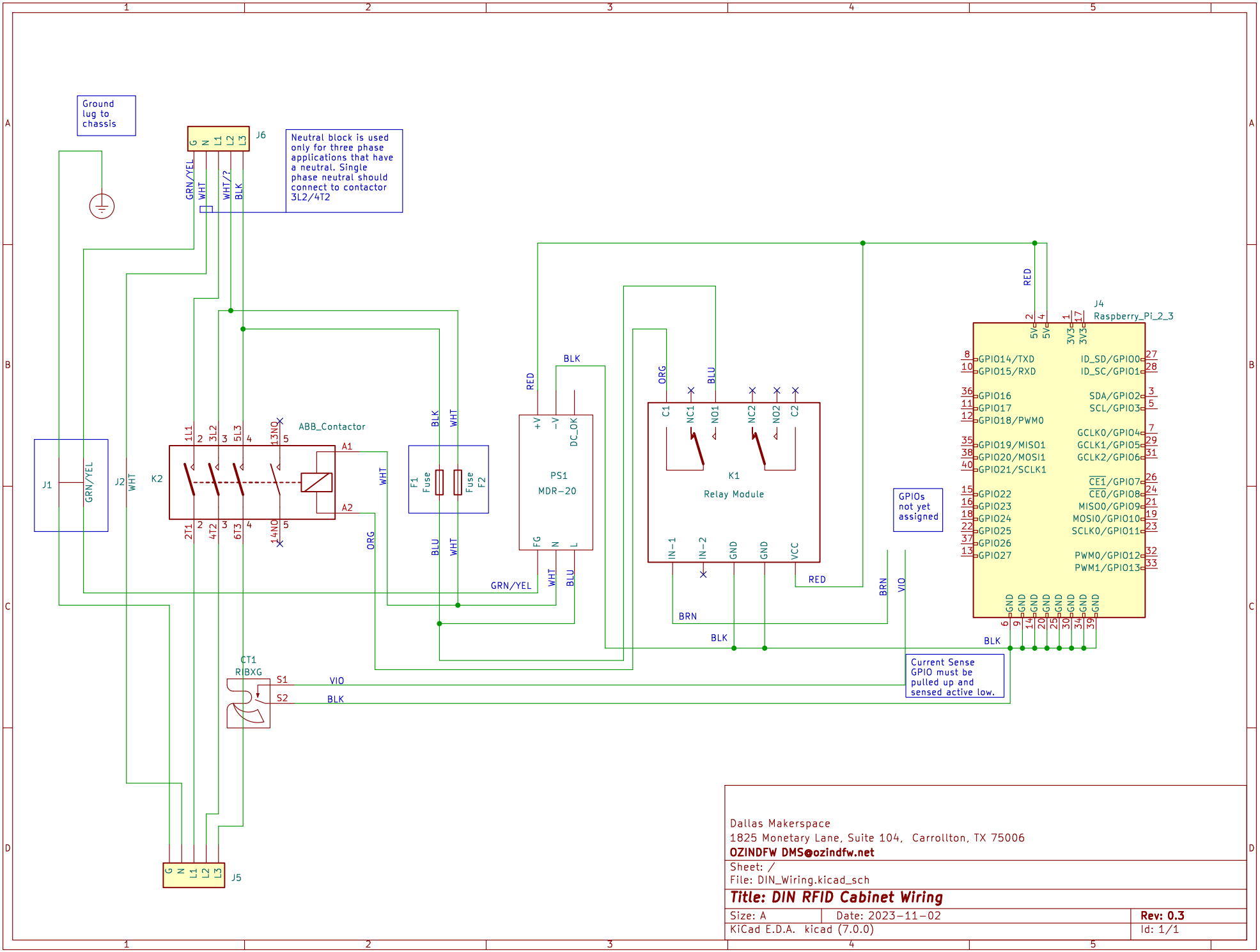

Dallas Makerspace
1825 Monetary Lane, Suite 104, Carrollton, TX 75006
OZINDFW DMS@ozindfw.net

Sheet: /
File: DIN_Wiring.kicad_sch

Title: DIN RFID Cabinet Wiring

Size: A	Date: 2023−11−02	**Rev: 0.3**
KiCad E.D.A. kicad (7.0.0)		Id: 1/1