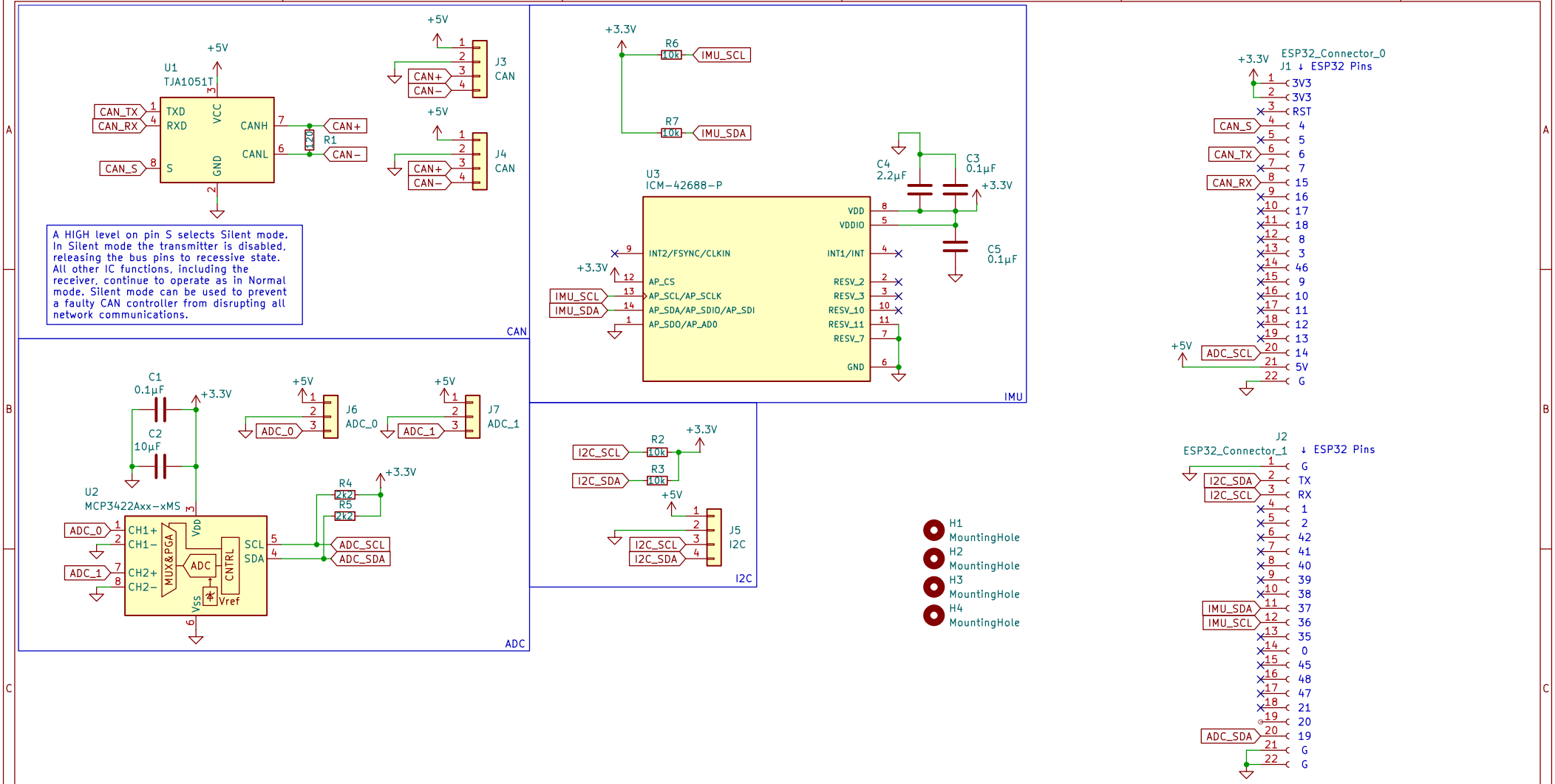

By: Will Everson
Dallas Formula Racing

Sheet: /
File: SSS_HAT.kicad_sch

Title: SSS_HAT

Size: A4	Date: 2024−10−24	**Rev: 1.0**
KiCad E.D.A. 8.0.6		Id: 1/1