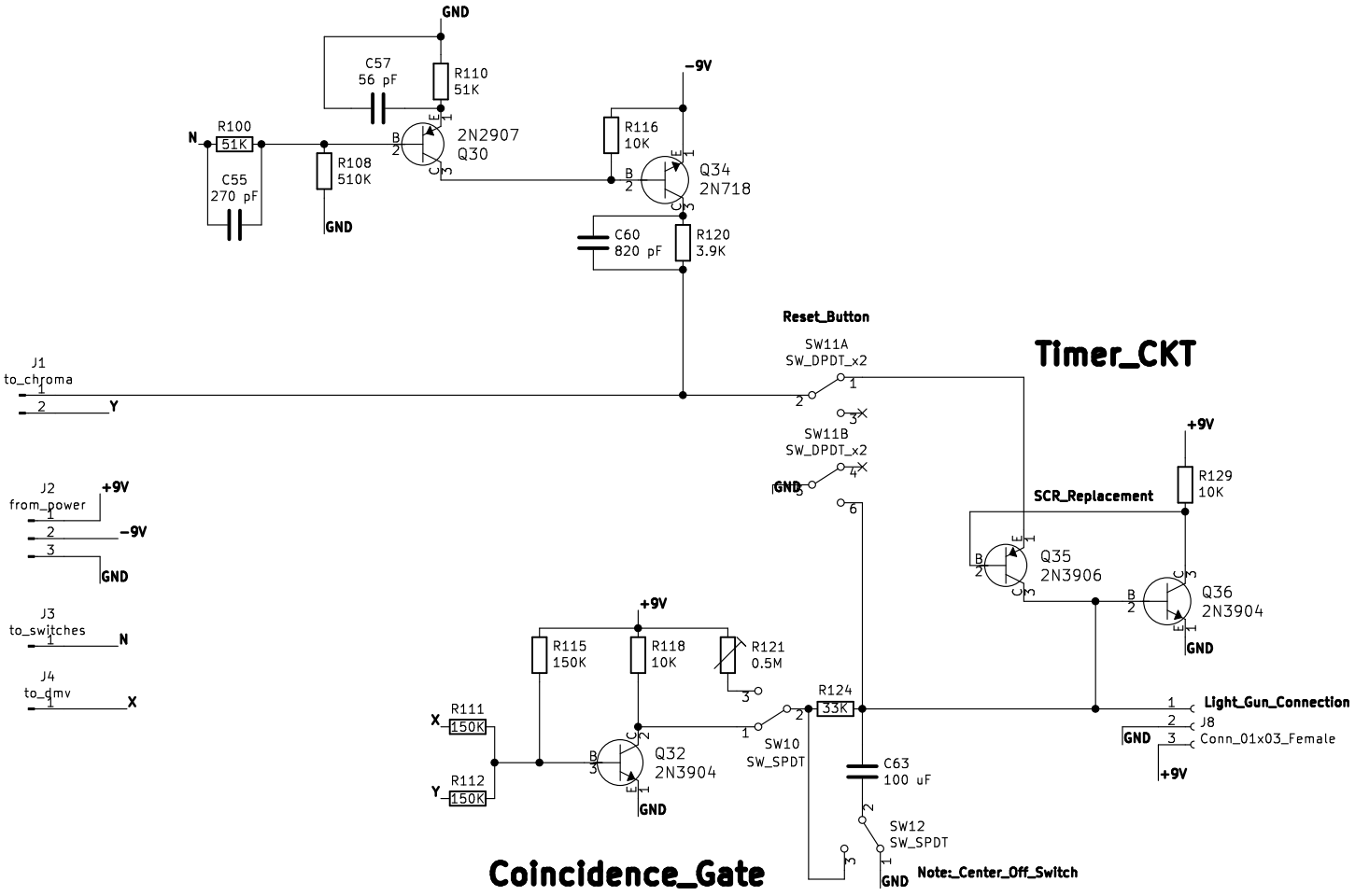

Sheet: /
File: timer.sch

Title: TVG2 Schematic

Size: A4	Date: 2019-07-08	Rev: v01
KiCad E.D.A. eeschema (5.1.5)-3		Id: 1/1