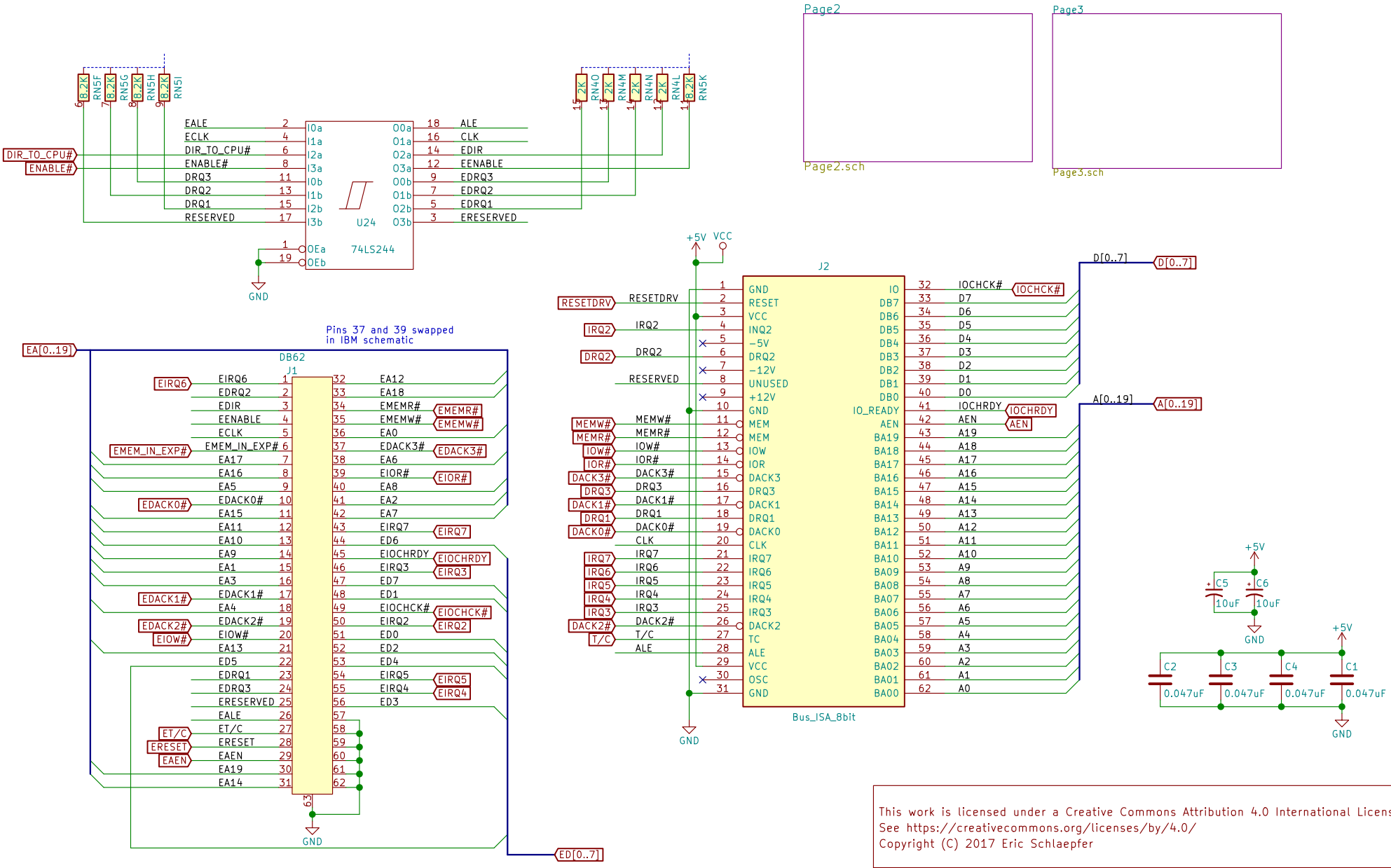

This work is licensed under a Creative Commons Attribution 4.0 International License.
See https://creativecommons.org/licenses/by/4.0/
Copyright (C) 2017 Eric Schlaepfer

Sheet: /
File: IBMReceiver.sch

Title: IBM 5161 Expansion Chassis Receiver Card

Size: A4	Date:	Rev:
KiCad E.D.A. kicad 4.0.7		Id: 1/3

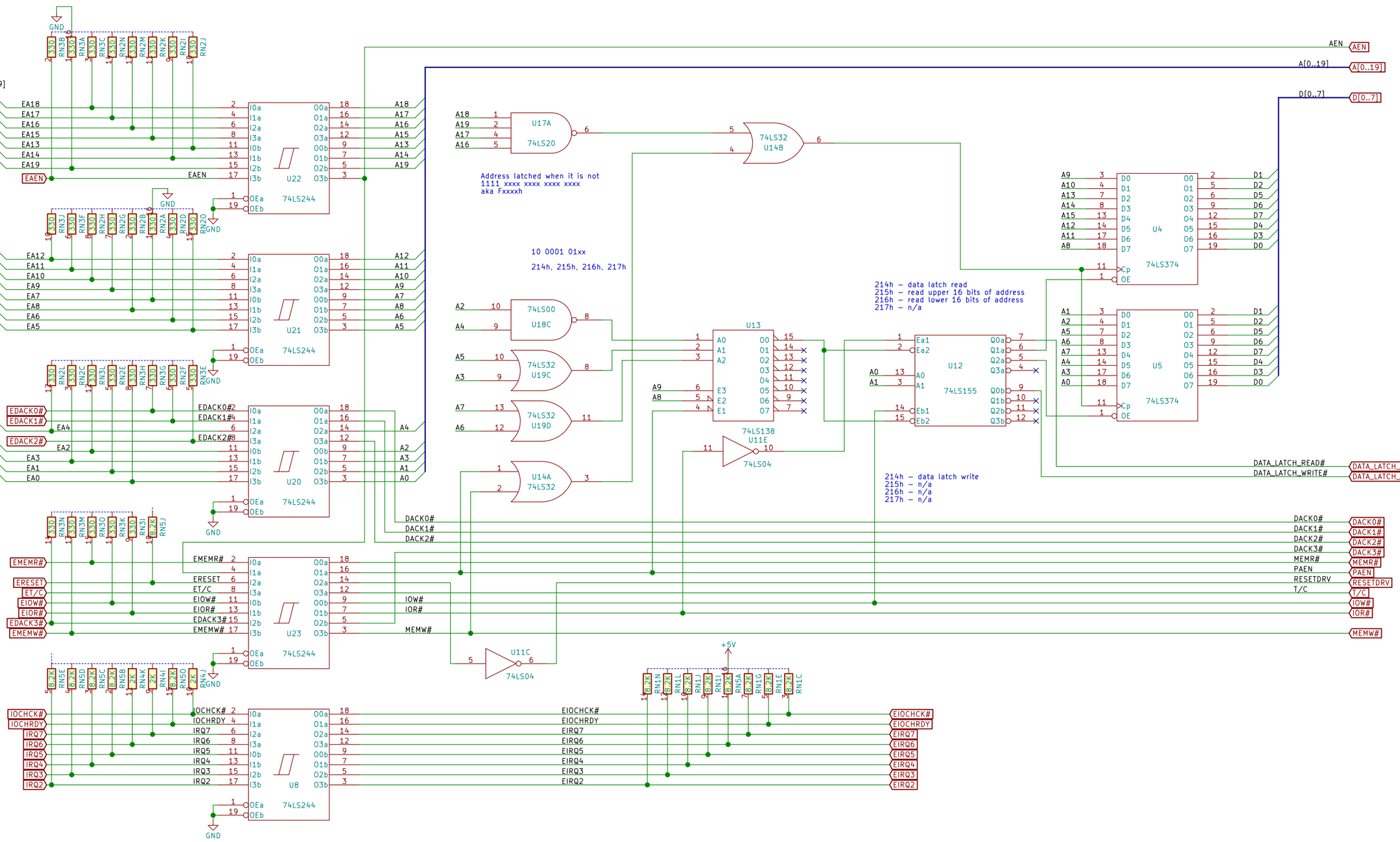

This work is licensed under a Creative Commons Attribution 4.0 International License.
See https://creativecommons.org/licenses/by/4.0/
Copyright (C) 2017 Eric Schlaepfer

Sheet: /Page2/
File: Page2.sch

Title: IBM 5161 Expansion Chassis Receiver Card

Size: A3	Date:	Rev:
KiCad E.D.A. kicad 4.0.7		Id: 2/3

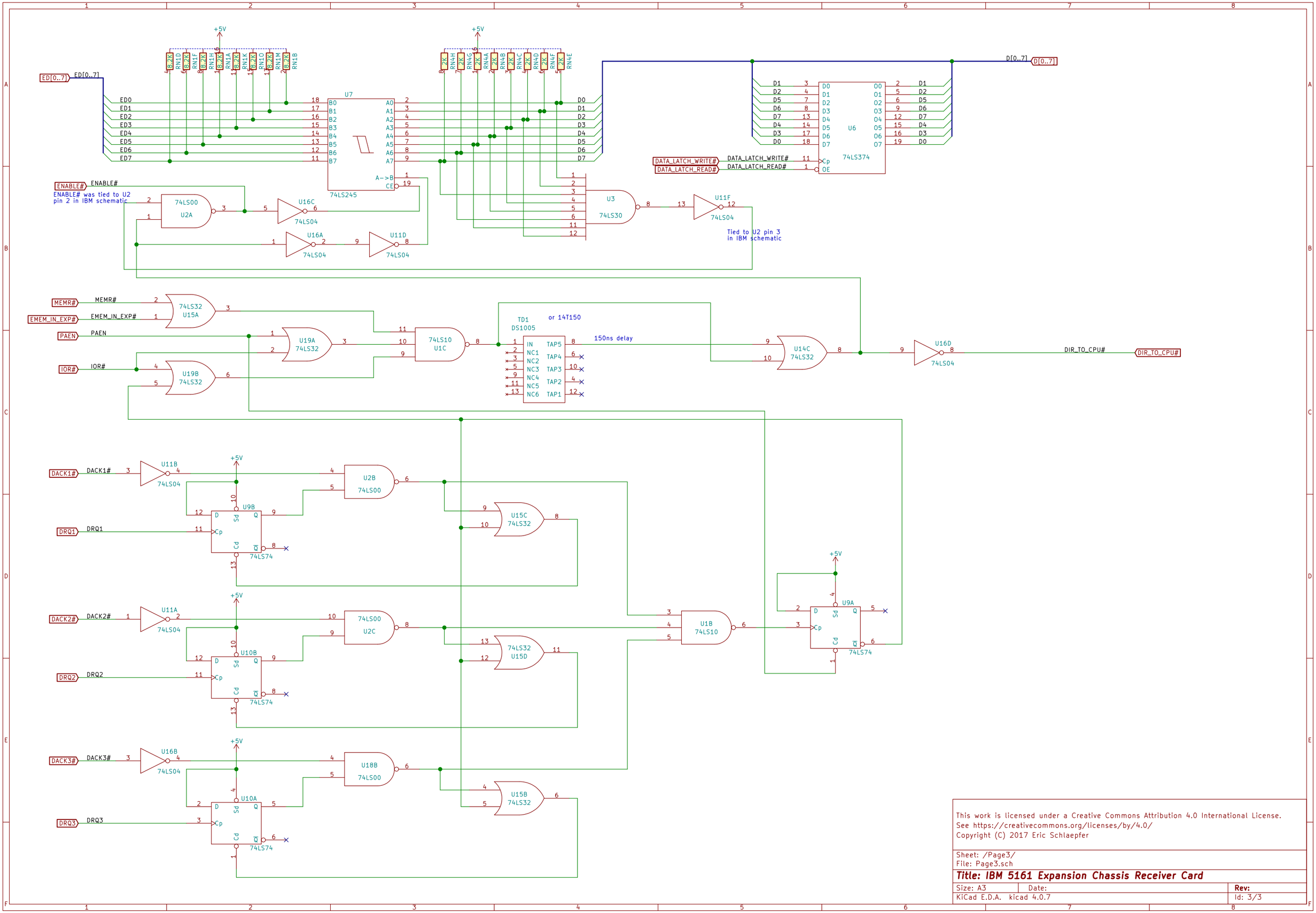

This work is licensed under a Creative Commons Attribution 4.0 International License.
See https://creativecommons.org/licenses/by/4.0/
Copyright (C) 2017 Eric Schlaepfer

Sheet: /Page3/
File: Page3.sch

Title: IBM 5161 Expansion Chassis Receiver Card

Size: A3	Date:	Rev:
KiCad E.D.A. kicad 4.0.7		Id: 3/3