Pre-Launch Report

Team Name: WeCann

Country: Finland

EUROPEAN SPACE EDUCATION RESOURCE OFFICE
A collaboration between ESA & national partners

1. Introduction

Our team, weCann was hoping to be able to work decentralized manner. Due to the goal, most of the work has been carried out in small parts and small design groups.

Pasi Ahtola, physics teacher, has a Master of Science degree in physics but has begun his studies in field of electrical engineering and had also university courses in electronics and programming science. He has mainly collected team up and kept it working and he has done some supportive tasks like ordering train tickets.

Vili Kervinen is the main organizer and creator of ideas and brainstorming. He is a 3rd year student especially interested in programming and electronics. Working with tasks of electrical wiring and programming and, His workload concerning weCann is about 25 h/week compared to school activities 0 h/week.

Dan Dumitrescu is passionate about electrical and mechanical engineering. He worked as the main designer of 3D-printed components. His workload concerning weCann is about 15h/week compared to school activities 35h/week.

Albert Laine is Vili's close mate, being especially interested in programming. He's been in charge of math-based code. His workload concerning weCann is about 15 h/week compared to school activities 0h /week.

Iris Lohan is attracted to web design, marketing and mathematics. She has made the outreach program possible. Her workload concerning weCann is about 3h/week compared to school activities 45h/week.

Yuchen Zhang's specialty is calculations and mathematical logic. He designed the PID-controller and the freefall detector. His workload concerning weCann is about 5h/week compared to school activities 35h/week.

Jouko Raunio has designed raw model of the weCann's gyroscope. Sadly he does have a school organized trip to France at time of competition and launch. His workload concerning weCann is about 2h/week compared to school activities 42h/week.

Elsa Liukkala has designed the parachute of weCann. Also, Elsa cannot take part in the competition weekend because of other activities. Her workload concerning weCann is about 1h/week compared to school activities 30h/week.

Helmi Salmelin has designed and made the parachute of WeCann. She will be also part in other activities at the time of competition and launch days. Her workload concerning weCann is about 3h/week compared to school activities 45h/week.

1.1 Mission objectives

The primary secondary mission is satellite stabilization. The main design concept focuses on measuring satellite parameters related to acceleration and rotation. Satellite rotation will be counteracted using a reaction wheel, a motorized spinning wheel designed to compensate for rotation around the satellite's longitudinal axis. The interest in rotation compensation stems from research showing that several CanSats have experienced issues with their parachute cords due to rotation. Additionally, there is a desire to expand the mission's objectives beyond just measuring air quality.

The core objective of the project is to verify the phases of the weCann descent and evaluate the effects of gyroscopic wheel spin on satellite stability. This verification can be achieved through either data collection or real-time verification of flight parameters via the onboard data link.

A successful launch will be defined as the ability to slow the weCann descent using the parachute and to demonstrate that the satellite's rotation is effectively mitigated through the gyroscopic effect.

Furthermore, the mission will study the decentralized approach to work and design, ensuring that the project is considered a success even if the mission is carried out using a fully functional and operational weCann-can system.

2. Project description

2.1 Mission overview

The weCann mission aims to verify the descent and rotation stability of a CanSat. The satellite will be launched from a rocket at 1000 meters, and its descent will be slowed to under 11 m/s, with rotation stabilized using a gyroscopic system. The mission's success will be measured by the effective use of the parachute and gyroscope to control descent and rotation. Flight data, including altitude, temperature, and rotation, will be transmitted to the ground station for analysis. The mission will also test decentralized teamwork in space project development.

2.2 Mechanical design

The shell of our CanSat is composed mainly of 5 custom 3D-components. These include: the base, top, reaction wheel, housing of the electronics and parachute deployment module (PDM). These have been carefully designed with weight optimization and structural integrity in mind.

2.2.1 Base

The base is the main component of the build onto which the other parts will latch onto. As shown in figure 2.1, the base consists of a bottom plate, half of a hollow cylinder with hexagonal cut-outs, a cut out for the parachute deployment servo and the gyroscope mounting module. To aid the locking of the base and the top, we installed a protruding edge into the half cylinder as shown in figure 2.2.

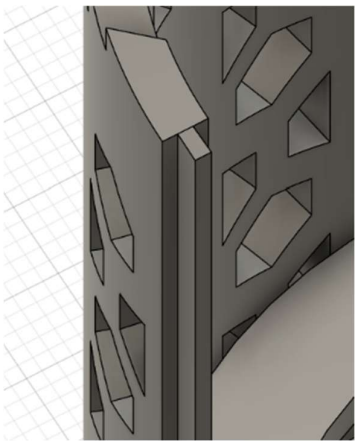

(Figure 2.1 & 2.2)

2.2.2 Top

The top completes the outer shell while providing support for the reaction wheel mounting module. It has a continuous indent on its edge to lock into the base. The supporting structure for the gyroscope mounting module can be seen more closely in figure 2.4

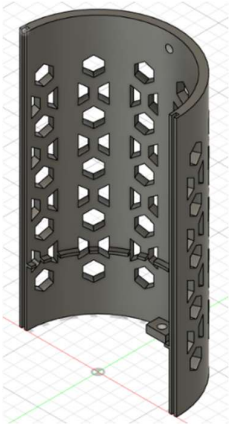

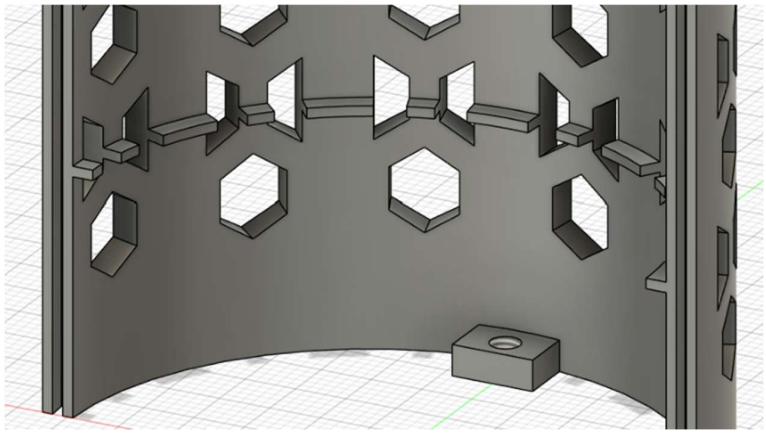

(Figure 2.3 & 2.4)

2.2.3 Gyroscope wheel and electronic housing

The gyroscope wheel is what will be spun by our brushless DC (BLDC) motor. The motor and the reaction wheel will be mounted on the bottom of our CanSat, to keep its center of gravity as low as possible. The wheel will be printed at 100% infill and will have the possibility of adding additional screws into it to optimize weight distribution in the CanSat. As shown in figure 2.5 the gyroscopic wheel houses an indent in which the motor will be placed. Figure 2.6 shows the housing for the electronic featuring screws for the motherboard, slots for li-ion batteries and screw holes for the mounting of the motor.

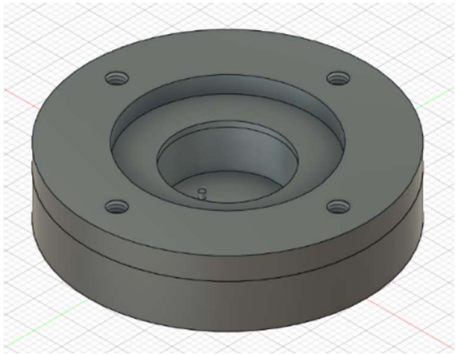

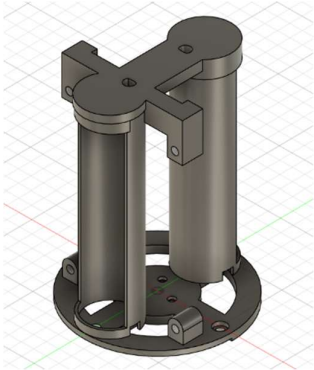

(Figure 2.5 & 2.6)

2.2.4 **Parachute deployment module (PDM)**

Our parachute will be housed in a separate module, that will be connected to the Cansat via 3mm screws. The actual deployment of our parachute will be done using a servo. The principle of this module is that when the servo spins, it will detach three hooks which will ultimately release a compressed spring and open the module for the parachute. The shell of the module and the hooks are shown in figures 2.7 and 2.8 respectively.

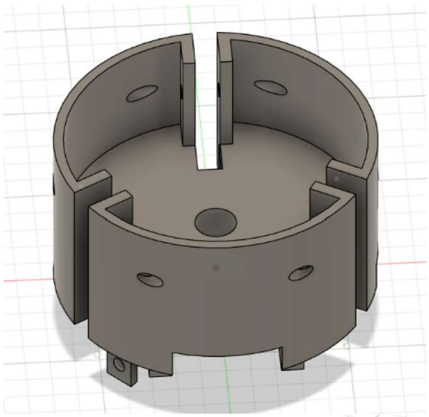

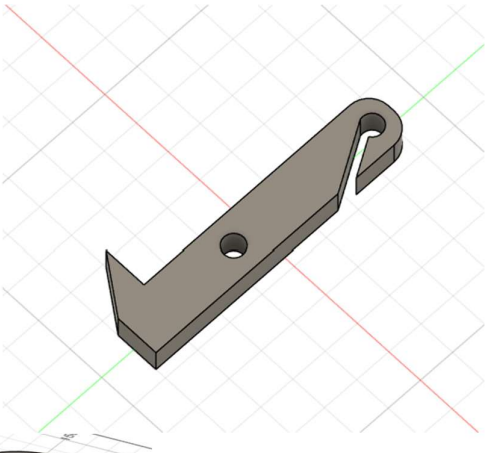

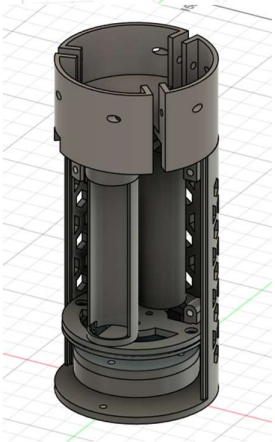

(Figure 2.7 & 2.8 & 2.9 the assembled CanSat)

2.2.5 **Overall**

All assembled our components form a carefully put together structure that is modular and easy to work with. The rest of the smaller components such as the pins, hooks, springs and covers will be attached after the rest of the components have been put together.

2.3 Electronic design

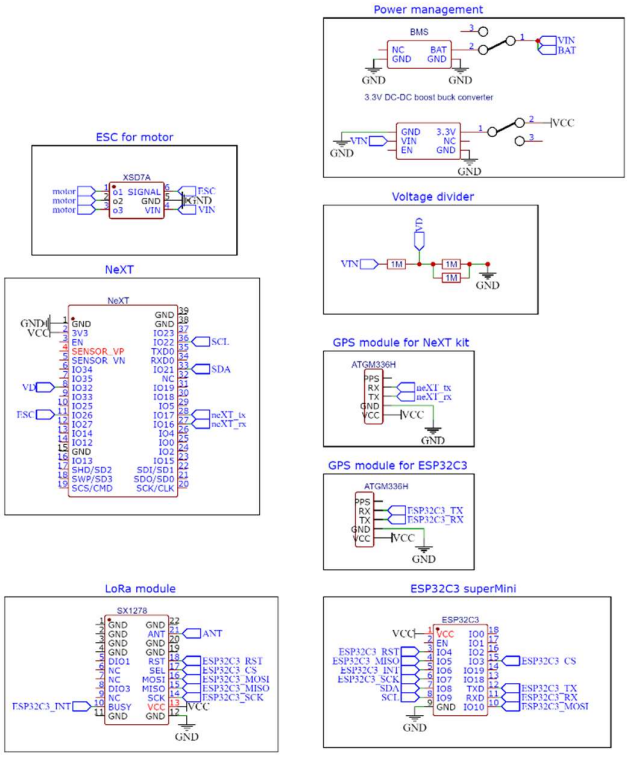

The NeXT board was selected as the main processing unit due to its integrated sensors, including a pressure and temperature module. Additionally, it features an Inertial Measurement Unit (IMU) for measuring the satellite's angular orientation. The power consumption of the NeXT kit is approximately 500 mW.

As a backup microcontroller, the ESP32C3 SuperMini is incorporated, consuming approximately 80 mW. In the event of a failure or disconnection of the main board, the backup microcontroller ensures continued operation by maintaining radio communication and GPS-based positioning. An I2C link connects the ESP32C3 SuperMini to the NeXT board. Two GPS modules (ATGM336H) are utilized: one interfaced with the NeXT board and the other with the ESP32C3 SuperMini. These modules were selected due to their 3.3V operating voltage and low power consumption (~80 mW each, totaling ~160 mW). They feature antenna detection and integrated protection mechanisms to enhance reliability. To mitigate single-point failure, separate

microcontrollers are used for each GPS module. Communication is established via UART at a baud rate of 9600.

The ESP32C3 SuperMini is also connected to a LoRa SX1270 module via the SPI protocol. Power consumption during transmission is approximately 300 mW. Experimental testing demonstrated a communication range exceeding 1 km at a low data rate. The LoRa module is designated as a beacon, transmitting only essential mission data such as GPS coordinates. Further details on this implementation are provided in the software design section. The 433 MHz version was selected to maximize range, as the longer wavelength theoretically enhances signal propagation. An omnidirectional antenna is employed to ensure broad coverage. The module operates solely in transmission mode due to its low data rate.

A secondary mission involves stabilizing the satellite's rotation using a gyroscope. This is achieved through a 1503 brushless DC (BLDC) motor controlled by an Electronic Speed Controller (ESC). The XSD7A ESC was chosen for its integrated microcontroller and configurable parameters. A Pulse Width Modulation (PWM) signal drives the ESC, with power consumption varying between 10 mW and 1000 mW, depending on the motor's operational state and speed.

Two 18650 Li-ion batteries, each with a capacity of 2600 mAh, are connected in series to increase the available voltage for motor operation. These batteries provide a continuous current of up to 10 A and incorporate built-in safety features. Charging is facilitated by a dedicated 2S Li-ion battery charger, eliminating the need for battery replacement. Since the onboard electronics require a stable 3.3V supply, a voltage buck-boost converter is included. The integrated voltage regulator on the NeXT board supports input voltages only up to 6V, which is insufficient given the battery configuration.

Two switches are implemented: one directly connected to the battery pack and another positioned after the 3.3V regulator. Additionally, a voltage divider is integrated to enable real-time battery state monitoring during flight.

Power consumption chart

device	consumption
NeXT	500 mW
ESP32C3 superMini	80 mW
ATGM336H	80 mW
ATGM336H	80 mW
SX1270	300 mW
motor and ESC	10-2000 mW
total	3040 mW

As our battery capacity is 2700 mAh and voltage is nominal voltage is 7.4 V. Thus, battery capacity is

$$E = Q \cdot V$$

$$E = 2{,}700\,Ah \cdot 7{,}4\,V = 19{,}98\,Wh$$

If motor is running constantly duration we would get is

$$t = \frac{E}{P} = \frac{19{,}98\,Wh}{3{,}040\,W} = 6{,}57236\,h \approx 6\,h$$

2.4 Ground station design

The ground station utilizes the ESP32 included with the NeXT system. An omnidirectional antenna was selected for optimal performance, as directional antennas were either cost-prohibitive or had extended shipping times. Additionally, a LoRa radio module is connected to the ESP32. Data is received via the ESP-NOW and LoRa links and transmitted to a computer running a C++ program, which stores the raw data in separate files for LoRa, ESP-NOW, and debug information. A custom communication protocol has been implemented, incorporating a 2-byte header as an identifier. The identifier is transmitted twice before the message. While LoRa and ESP-NOW packets have a fixed size, debug packets are of variable length, necessitating the inclusion of a one-byte size indicator.

PROTOCOL DESCRIPTION

Byte	type
ID	hex
ID	hex
ID	hex
ID	hex
LEN	0-255 (include if dynamic)
DATA	byte
DATA	byte
...	byte

MESSAGES

Description	id	Length (bytes)
ESP-NOW	0x55 | 0xAA	FIXED
LoRa	0x40 | 0xBB	FIXED
Debug	0x30 | 0xCC	DYNAMIC

The program continuously reads serial data until it detects the identifier twice, ensuring reliability and preventing false triggers. Once the identifier

is confirmed, the entire message is read and written to a file as raw bytes. Parsing can be performed later using cast, allowing the data to be converted into a CSV format for further analysis by other software. Additionally, the ground station is capable of transmitting configuration commands via ESP-NOW using the same communication protocol. A user input field in the software allows configurations to be entered, which are then transmitted to the ground station through a serial connection.

MESSAGES

Description	id	Length (bytes)	type
Boolean config	0xA0 | 0xA1	1	u_char
Flight stage	0xA2 | 0xA3	1	u_char
Altitude difference to trigger stage change from apogee	0xA4 | 0xA5	8	uint16_t[4]
Altitude measurement sensor	0xA6 | 0xA7	1	u_char
Initial pressure	0xA8 | 0xA9	4	u_int32_t
Voltage offset	0xAA | 0xAB	4	u_int32_t
Initial altitude	0xAC | 0xAD	4	u_int32_t

These configuration values are stored in the NeXT board's EEPROM, ensuring they remain accessible even after a software crash. The CanSat does not include headers in its transmissions, as only a single message type is sent via LoRa and a different one via ESP-NOW. The ground station's ESP32 differentiates between these two data streams and appends the appropriate headers before forwarding them to the computer. LoRa operates at 433 MHz, while ESP-NOW utilizes Wi-Fi spectrum frequencies.

2.5 Software design

The software is designed for reliable operation. Multiple fail-detection mechanisms have been implemented to ensure robustness, and the satellite is capable of recovering from a software crash.

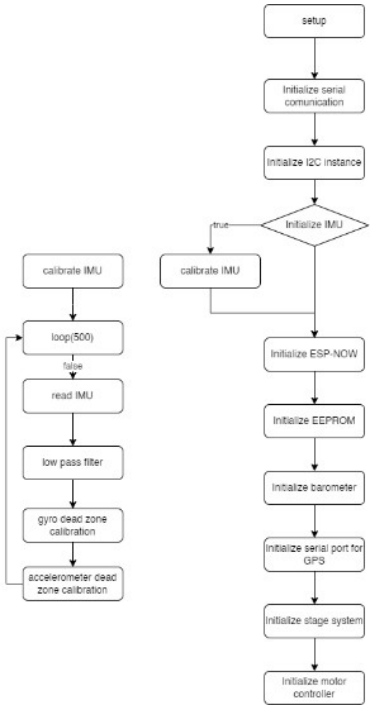

The NeXT board initializes all connected sensors during startup. A basic IMU calibration is performed, specifically a dead zone calibration, to minimize the impact of noise on sensor readings during flight. Other sensors do not require calibration due to their higher accuracy. The gyroscope within the IMU has notable limitations, with an output error of up to ± 10 dps. Accelerometer, barometer and GPS are stable.

DEVICE COMMUNICATION

Device	Protocol
IMU	I2C
EEPROM	Internal communication
barometer	I2C
GPS	Serial
ESC	PWM

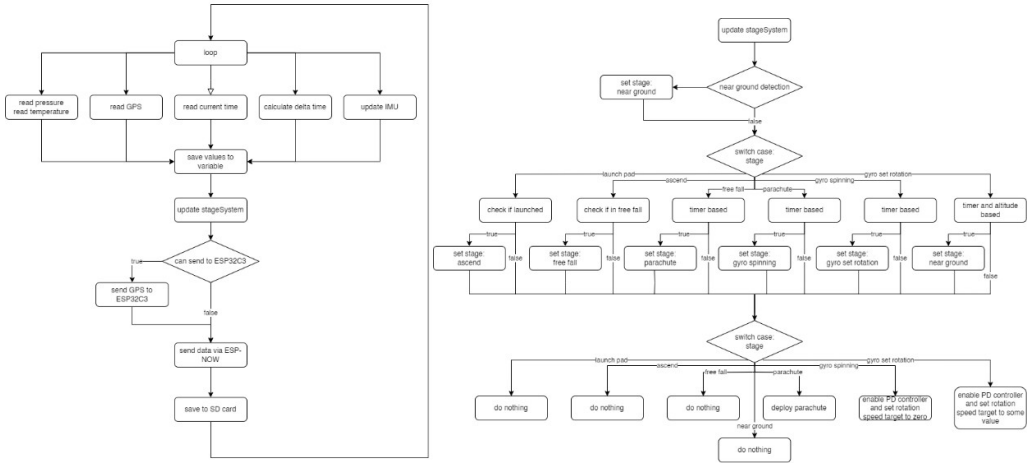

This is a simplified representation of the main loop running on the NeXT board. Initially, all sensor data is collected and stored in a structured format. This structure is transmitted via ESP-NOW to the ground station, ensuring that complete sensor data is available even if the satellite is lost. In addition to sensor readings, the structure contains flight status and other critical situational information.

A stage management system monitors flight phases and executes corresponding actions, such as parachute deployment. Following this, state and configuration data are sent to the ESP32-C3, which manages LoRa communication and a secondary GPS module. All sensor and configuration data are then stored on an SD card for post-flight analysis.

The main loop operates at approximately 80 Hz, meaning sensor data is gathered every 0.0125 seconds and written to the SD card. A single file is used to store raw bytes cast from the structured data, with a size of approximately 100 bytes per entry, leading to a data rate of around 100 bytes per second. Data logging begins before launch, and even with continuous recording, the total data volume remains in the megabyte range. A 64 GB SD card is utilized to accommodate storage needs. Critical flight information is stored in the EEPROM (flash memory of the ESP32), with minimal write operations to preserve its limited lifespan.

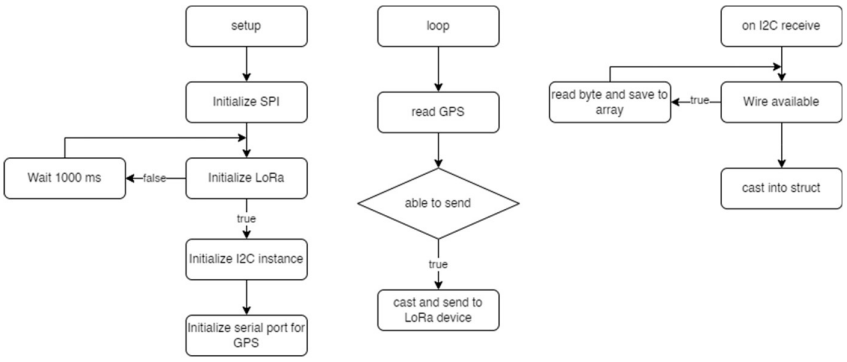

An additional microcontroller, the ESP32-C3 SuperMini, is used for LoRa communication to ensure that GPS data and critical system information

remain accessible even in the event of a main computer failure. However, due to time constraints, an override functionality was not implemented. Communication between the two microcontrollers is handled via the I2C protocol, which was chosen for its simplicity, requiring only two wires, and its sufficient data transfer speed.

All onboard software is written in C++ due to its speed and reliability when implemented correctly. The use of C++ also allowed for significant memory optimizations, as it is a strongly typed language. Code for the ESP boards is developed using the Arduino IDE and incorporates various open-source libraries. On the computer side, software development is conducted in Visual Studio Code and compiled using g++.

2.6 Recovery system

Using parameters found on the teacher's guide for CanSat we calculated the optimal surface area for our parachute. We decided to design a hemispheric parachute model and make it out of a slick and light but resistant nylon fabric.

Our calculations for the optimal surface area:

Minimum descent rate: 8 m/s
Maximum descent rate: 11 m/s
Permitted mass: 300–350 g
Drag coefficients:
Hemispherical shape: 1.5

$$m * g = 0,5 * C_D * \rho * A * V^2$$

A: Total surface area of the parachute
CD: Drag coefficient of the parachute
ρ: Local air density, assumed to be constant.
V: velocity

When acceleration is zero, both forces are equal in magnitude, and we can write:

$$F_D = F_g$$

$$m = 350g = 0{,}35kg$$

$$g = 9{,}81\ \frac{m}{s^2}$$

$$C_D = 1{,}5$$

$$\rho = 1{,}11\ \frac{kg}{m^3}$$

$$v = 8\ \frac{m}{s}$$

$$A = \frac{m \cdot g}{0{,}5 \cdot C_D \cdot \rho \cdot v^2}$$

$$A = \frac{0{,}35kg \cdot 9{,}81\ \frac{m}{s^2}}{0{,}5 \cdot 1{,}5 \cdot 1{,}11 \cdot \left(8{,}0\ \frac{m}{s^2}\right)^2} = 0{,}064442567567567\ m^2$$

$$A = \pi r^2$$

$$r = \sqrt{\frac{A}{\pi}} = \sqrt{\frac{0{,}064442567567567\ m^2}{\pi}} = 0{,}14322257625047690958m$$

We made a pattern for the parachute so that it's a 50% sphere, has 8 gores and the surface area of the parachute lying flat is the one calculated above. The parachute also has a spillhole with a 3cm diameter to make the parachute even more stable.

Testing

Picture of the first parachute model, where we used a sparse net instead of ropes to minimize the risk of tangling and parachute closure. During testing, we found that this approach wasn't ideal because the net wasn't sparse enough. As a result, we created a second version with a more traditional design. The attachment mechanism, which spins, helps compensate for the net.

3. Requirements

Characteristics	Figure (units)
Height of the CanSat	110 cm
Mass of the CanSat	350 g
Diameter of the CanSat	64 cm
Length of the recovery system	4 cm
Flight time scheduled	28.3.2025, 13:00-16:30
Calculated descent rate	8 m/s
Radio frequency used	433 MHz, Wi-Fi
Power consumption	3040 mW
Total cost	215 €

4. Project planning

4.1 Time schedule of the CanSat preparation

Alm planning and general ideas were created back in December of 2024. Parts were ordered in February of 2025 and at the same time software development started. Meanwhile, our mechanical team still waited for the parts. The first iteration of the parachute was made in March and the last version week before the competition. Mechanical design was finished on 25 of March. We didn't have many deadlines as we needed to keep everything flexible. Also, some members of our team had matriculation exams during development time.

4.2 Budget

Field	Cost (€)
Electronics	90 +95
Mechanical design and components	20
Other	10
Total	215

4.3 External support

Our school supports up to 50€ on electronics.

4.4 Test plan

Before launching day, we verify all sensors do work even if CanSat is shaken a lot. We make sure that the motor required for the secondary mission can spin freely and has enough power. Also, the PD values have been tuned. We can override the recovery system for testing purposes so we can test it beforehand.

5. Outreach programme

As part of our CanSat project, we have aimed to raise awareness both within our school and externally. Our outreach began with a workshop organized during our school's wellness day, allowing students to explore our satellite's design process and learn about the CanSat competition.

The project was later shared through our school's Instagram account (@classillinen), which has approximately 2000 followers—mostly students and alumni interested in science due to our specialized science program. Additionally, we created a unique logo for our team, featured prominently in our promotional materials and visible on our posters.

https://www.instagram.com/p/DHWtxvQNUNQ/?utm_source=ig_web_copy_link&igsh=MzRlODBiNWFlZA==

A dedicated Instagram account (@wecann2025) was also created, using our distinctive logo and currently engaging over 65 followers.

https://www.instagram.com/wecann2025/

To reach a broader audience, we have designed posters featuring our logo and placed them around Tampere University, strategically targeting university students and staff interested in satellite technology. These posters included a link to our LinkedIn page for professional updates and networking as well as our Instagram channel.

https://www.linkedin.com/company/wecann2025/

Finally, our upcoming school newspaper article will further highlight our project, aiming to inspire continued participation in future competitions.

References

https://content.arduino.cc/assets/st_imu_lsm6ds3_datasheet.pdf (2017)

https://www.cansat.fi/docs/landing

https://github.com/netnspace/CanSatNeXT_library