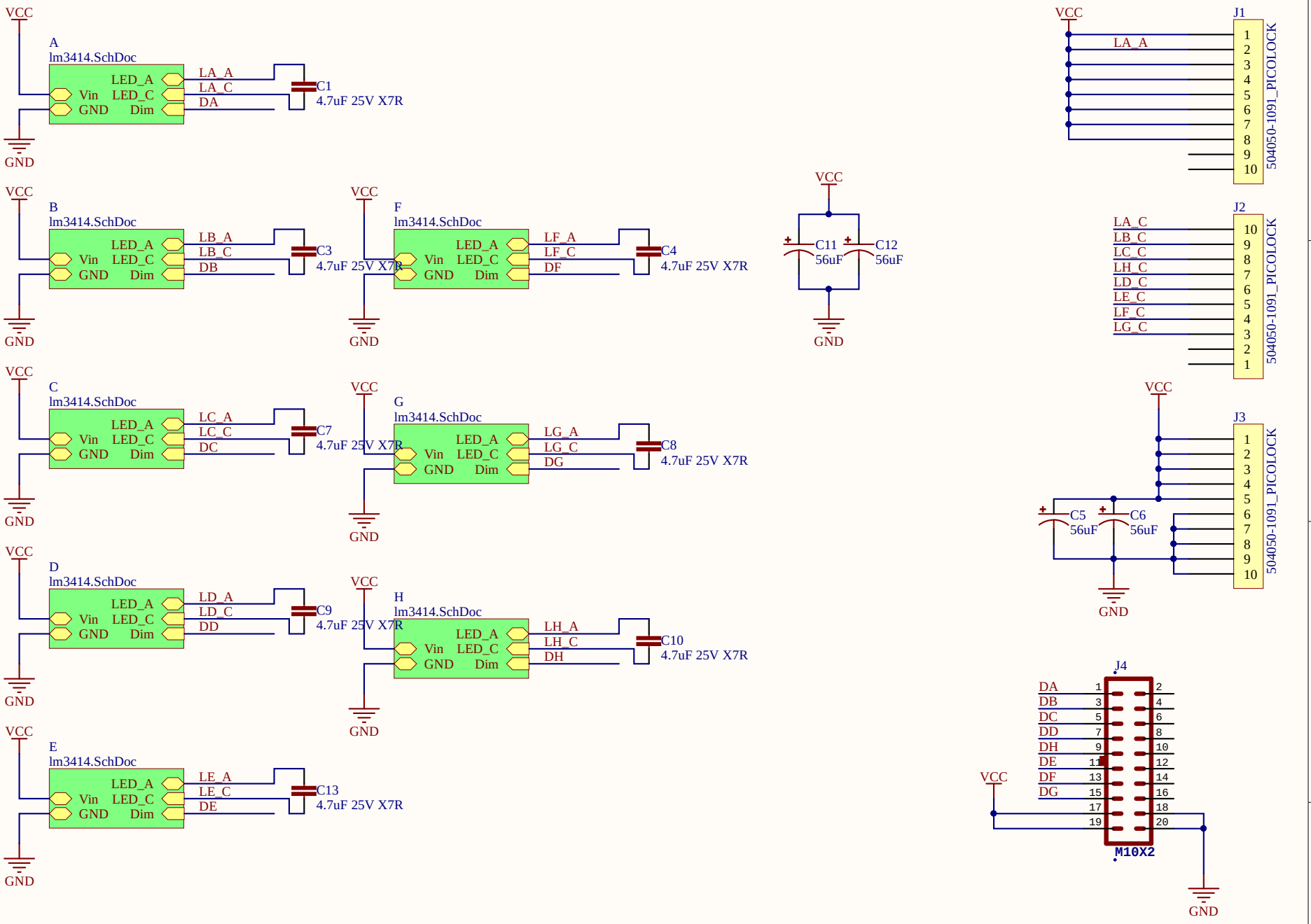
A
lm3414.SchDoc
LED_A
Vin LED_C
GND Dim
LA_A
LA_C
DA
C1
4.7uF 25V X7R
B
lm3414.SchDoc
LB_A
LB_C
DB
C3
4.7uF 25V X7R
F
lm3414.SchDoc
LF_A
LF_C
DF
C4
4.7uF 25V X7R
C11
56uF
C12
56uF
C
lm3414.SchDoc
LC_A
LC_C
DC
C7
4.7uF 25V X7R
G
lm3414.SchDoc
LG_A
LG_C
DG
C8
4.7uF 25V X7R
D
lm3414.SchDoc
LD_A
LD_C
DD
C9
4.7uF 25V X7R
H
lm3414.SchDoc
LH_A
LH_C
DH
C10
4.7uF 25V X7R
E
lm3414.SchDoc
LE_A
LE_C
DE
C13
4.7uF 25V X7R
VCC
GND
J1
J2
J3
J4
504050-1091_PICOLOCK
C5
56uF
C6
56uF
M10X2
DA
DB
DC
DD
DH
DE
DF
DG
Title
Size
A
Number
Revision
Date: 3/7/2016
Sheet of
File: C:\Users\..\ledbrick_driver_toplevel.SchDoc
Drawn By:

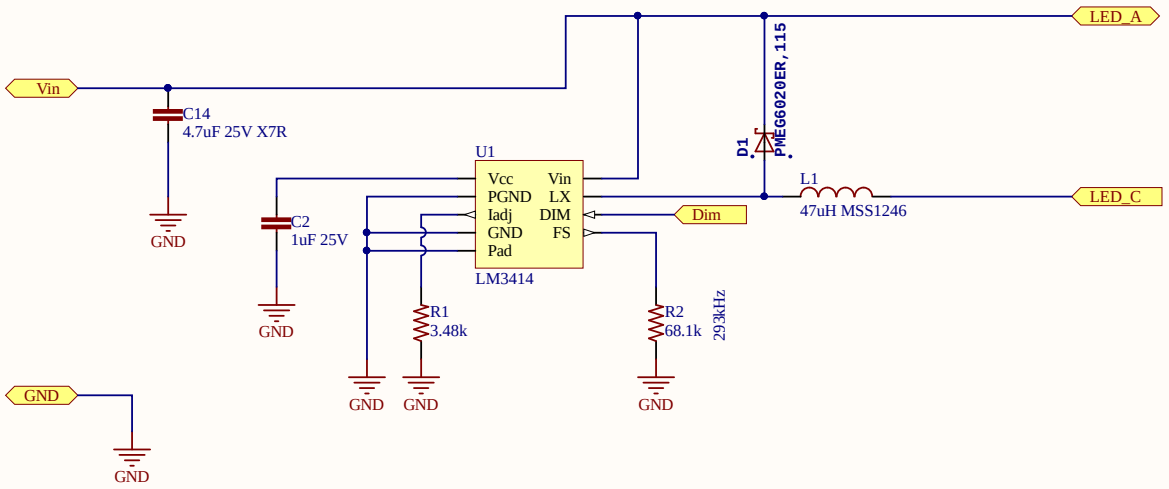


| | | | |
|---|---|---|---|
| Title | ***LM3414 24V Driver*** | | *StackFoundry LLC* |
| Size: A4 | Number: | Revision: | |
| Date: 3/7/2016 | Time: 7:47:32 AM | Sheet of | |
| File: C:\Users\atrus\Dropbox\elec\pr\ledbrick\ledbrick_driver_lm3414_rev0\lm3414.SchDoc | | | |

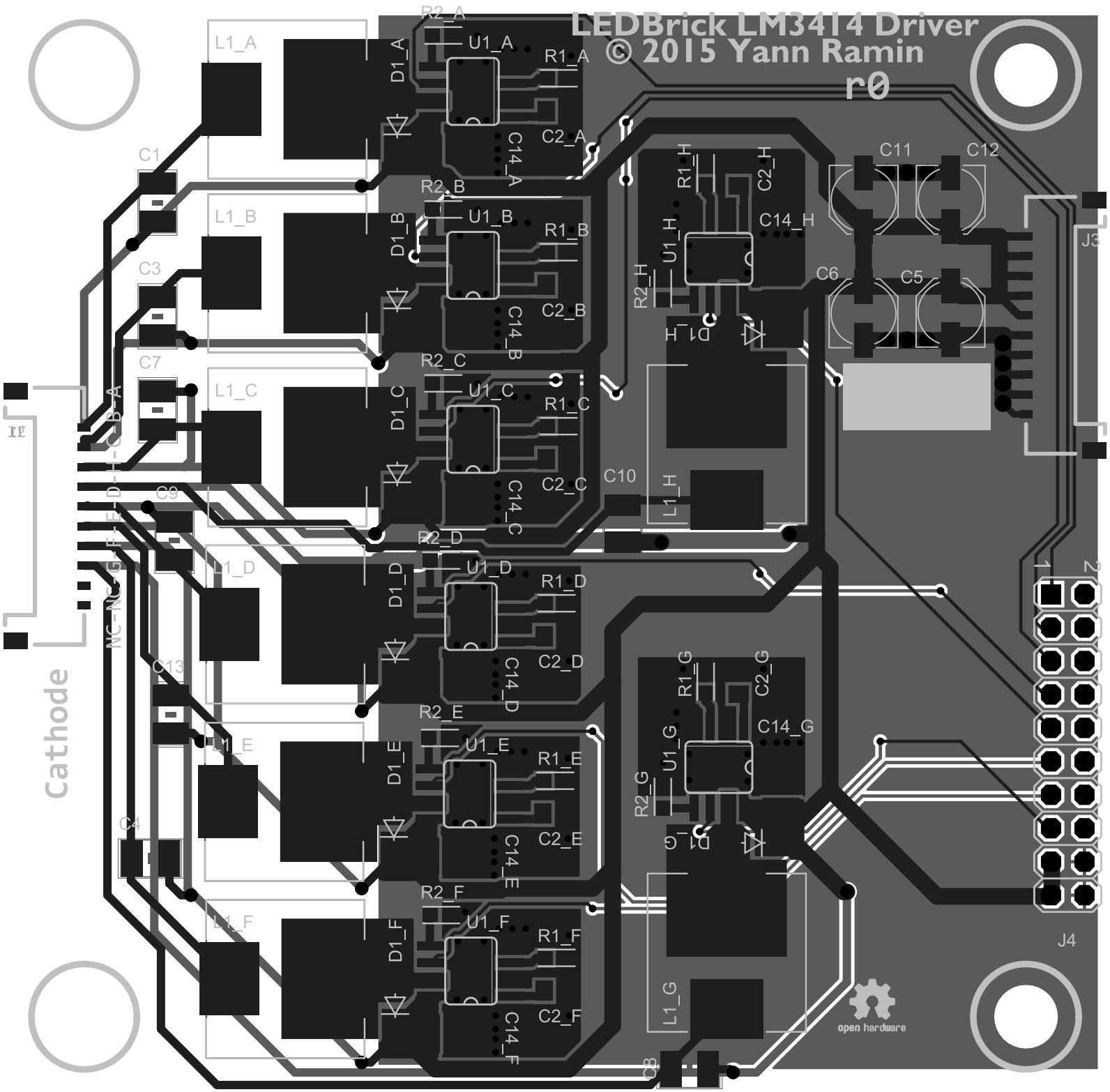
LEDBrick LM3414 Driver
© 2015 Yann Ramin
r0
L1_A
L1_B
L1_C
L1_D
L1_E
L1_F
L1_G
L1_H
C1
C3
C4
C5
C6
C7
C8
C9
C10
C11
C12
C13
C14_A
C14_B
C14_C
C14_D
C14_E
C14_F
C14_G
C14_H
C2_A
C2_B
C2_C
C2_D
C2_E
C2_F
C2_G
C2_H
R1_A
R1_B
R1_C
R1_D
R1_E
R1_F
R1_G
R1_H
R2_A
R2_B
R2_C
R2_D
R2_E
R2_F
R2_G
R2_H
U1_A
U1_B
U1_C
U1_D
U1_E
U1_F
U1_G
U1_H
D1_A
D1_B
D1_C
D1_D
D1_E
D1_F
D1_G
D1_H
J3
J4
Cathode
open hardware

| Item # | mn Name Error:Manufac | #Column Name Error:Manufacturer No | Quantity | #Column Name Error:Note | Designator | Description | Footprint | Comment | LibRef |
|---|---|---|---|---|---|---|---|---|---|
| 1 | | | 16 | | C1, C3, C4, C7, C8, C9, C10, C13, C14_A, C14_B, C14_C, C14_D, C14_E, C14_F, C14_G, C14_H | | C1210 | 4.7uF 25V X7R | C-EU |
| 2 | | | 8 | | C2_A, C2_B, C2_C, C2_D, C2_E, C2_F, C2_G, C2_H | | C0805 | 1uF 25V | C-EU |
| 3 | | | 4 | | C5, C6, C11, C12 | | PANASONIC_C | 56uF | CPOL-US |
| 4 | | | 8 | | D1_A, D1_B, D1_C, D1_D, D1_E, D1_F, D1_G, D1_H | | SOD123 | PMEG6020ER,115 | SCHOTTKY-DIODESOD123 |
| 5 | | | 3 | | J1, J2, J3 | | 504050-1091_PICOLOCK | 504050-1091_PICOLOCK | 504050-1091_PICOLOCK |
| 6 | | | 1 | | J4 | | 2X10 | M10X2 | M10X2 |
| 7 | | | 8 | | L1_A, L1_B, L1_C, L1_D, L1_E, L1_F, L1_G, L1_H | | MSS1246 | 47uH MSS1246 | L-US |
| 8 | | | 8 | | R1_A, R1_B, R1_C, R1_D, R1_E, R1_F, R1_G, R1_H | | R0603 | 3.48k | R-US |
| 9 | | | 8 | | R2_A, R2_B, R2_C, R2_D, R2_E, R2_F, R2_G, R2_H | | R0603 | 68.1k | R-US |
| 10 | | | 8 | | U1_A, U1_B, U1_C, U1_D, U1_E, U1_F, U1_G, U1_H | | SO08 - PowerPad | LM3414 | LM3414 |