PROJECT REPORT

WiFi Controlled Robot Car

NodeMCU ESP8266 + L298N Motor Driver + 4x 12V DC Gear Motor

Submitted By	Ramsudarshan Maurya
Project Title	Robo Race Car
Hardware	NodeMCU ESP8266 + L298N + 4x DC Motor
Technology	IoT, Embedded Systems, Web Server
Programming Language	C / Arduino Framework
WiFi SSID	rsmaurya
Date	4 March 2025

Electronics & IoT Project | 2025

1. Introduction

1.1 Project Overview

This project presents the design and implementation of a WiFi-controlled Robot Car using NodeMCU ESP8266 microcontroller. The robot car is capable of moving in four directions — Forward, Backward, Left and Right — with adjustable speed control via Pulse Width Modulation (PWM). The system uses an L298N dual H-bridge motor driver to control four 12V 200RPM DC gear motors. The entire robot is controlled wirelessly through any mobile or PC web browser connected to the same WiFi network.

1.2 Objectives

- Design a WiFi-based robot car controlled from any web browser
- Use NodeMCU ESP8266 as the main microcontroller and built-in web server
- Drive 4 DC gear motors using L298N dual H-bridge motor driver module
- Implement PWM-based speed control ranging from 0% to 100%
- Create a mobile-responsive touch interface for real-time control
- Provide keyboard control support (WASD / Arrow Keys) for PC users

1.3 Project Scope

This project covers hardware assembly and wiring, firmware programming in C using the Arduino framework, and a web-based controller UI. It demonstrates key concepts in IoT, embedded systems, motor control, PWM, and WiFi-based HTTP communication.

2. Components & Specifications

2.1 Hardware Components

S.No	Component	Specification	Qty	Purpose
1	NodeMCU ESP8266	80MHz, 3.3V, WiFi 2.4GHz	1	Main Controller
2	L298N Motor Driver	12V, 2A/ch, Dual H-Bridge	1	Motor Control
3	DC Gear Motor	12V, 200RPM, High Torque	4	Locomotion
4	12V Li-ion Battery	3S, 2200mAh	1	Power Supply
5	Buck Converter	LM2596, 12V to 5V	1	NodeMCU Power
6	4WD Robot Chassis	Acrylic / Aluminium Frame	1	Structure
7	Rubber Wheels (65mm)	65mm diameter	4	Traction
8	Jumper Wires	M-F, Various lengths	20+	Wiring
9	Data USB Cable	Micro USB (Data type)	1	Code Upload

2.2 Software & Tools

Tool / Software	Version	Purpose
Arduino IDE	2.x	Code writing & uploading
ESP8266 Board Package	3.x	NodeMCU board support
ESP8266WiFi Library	Built-in	WiFi connectivity
ESP8266WebServer	Built-in	HTTP web server
CH340G USB Driver	Latest	USB-Serial communication
Web Browser (Chrome/Firefox)	Any version	Robot controller interface

3. Circuit Diagram

3.1 Complete Circuit

The circuit diagram below shows the full wiring between NodeMCU ESP8266, L298N motor driver, four DC gear motors, and the 12V power supply.

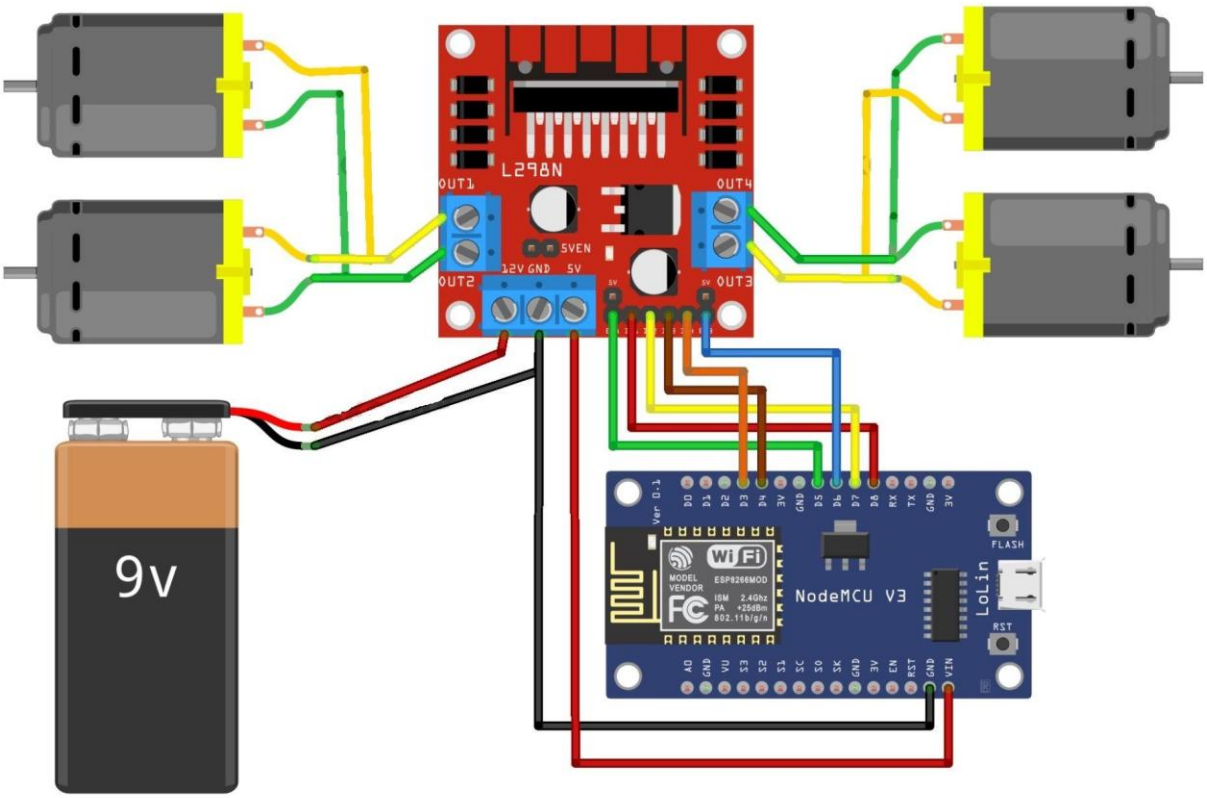

Figure 1 — NodeMCU ESP8266 + L298N + 4x Motor Complete Circuit Diagram

3.2 Pin Mapping

NodeMCU Pin	GPIO No.	L298N Pin	Function
D1	GPIO5	IN1	Left Motor — Direction A
D2	GPIO4	IN2	Left Motor — Direction B
D3	GPIO0	IN3	Right Motor — Direction A
D4	GPIO2	IN4	Right Motor — Direction B
D5	GPIO14	ENA	Left Motor PWM Speed
D6	GPIO12	ENB	Right Motor PWM Speed

GND	GND	GND	Common Ground (Shared)
VIN / USB	5V	5V OUT	NodeMCU Power Input

3.3 Wiring Rules

- NodeMCU = 3.3V logic only — NEVER connect 12V motor directly to NodeMCU GPIO
- Common GND must be shared between Battery negative, L298N GND, and NodeMCU GND
- L298N has ~2V internal voltage drop — Motor gets approximately 10V from 12V battery
- Remove ENA and ENB jumper caps from L298N module to enable PWM speed control
- Use a data-capable USB cable for uploading code, not a charging-only cable

4. Block Diagrams

4.1 System Block Diagram

Shows the overall system architecture: battery, power supply, NodeMCU, L298N driver, and four motors.

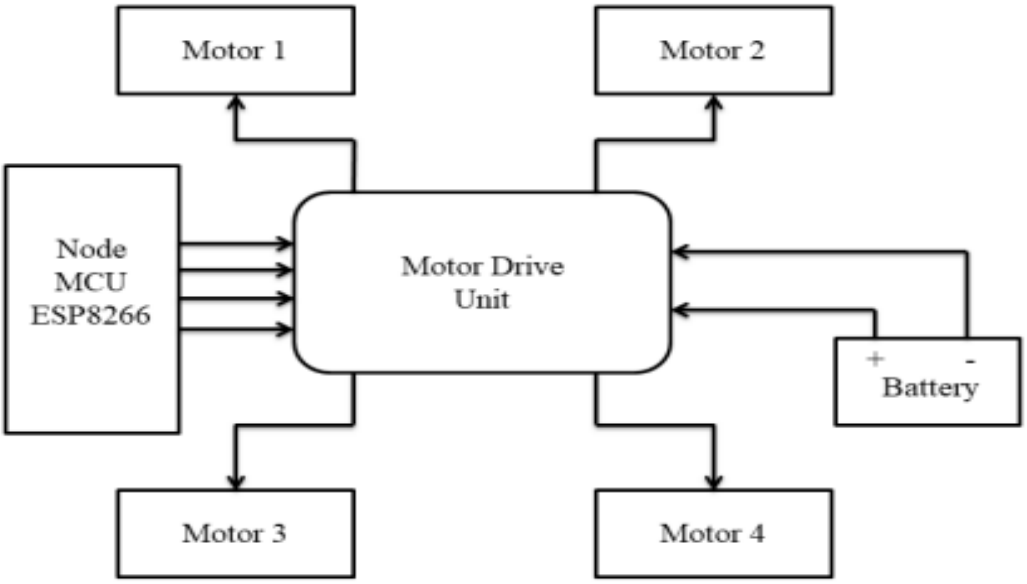

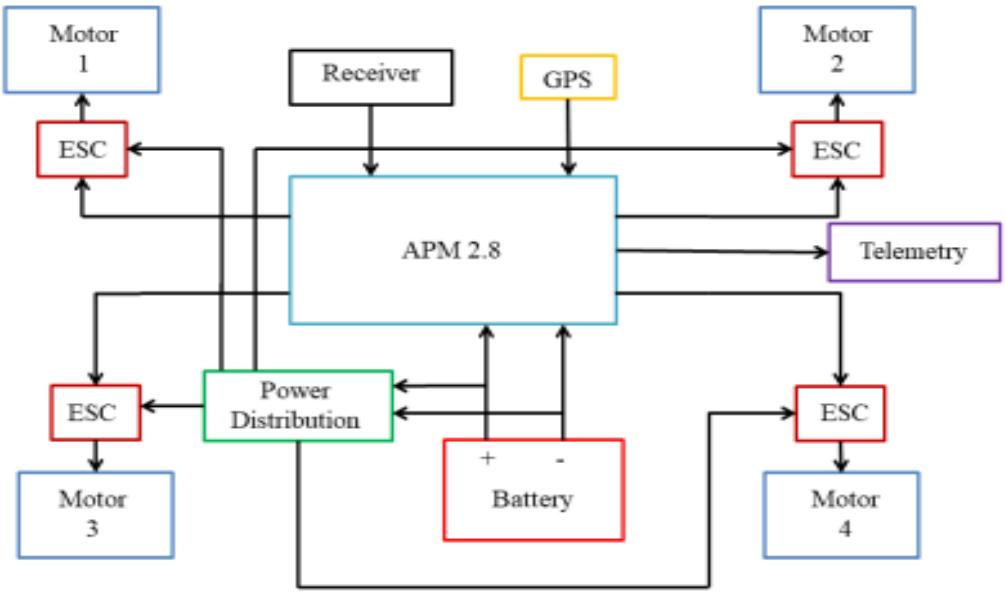

Circuit Diagram

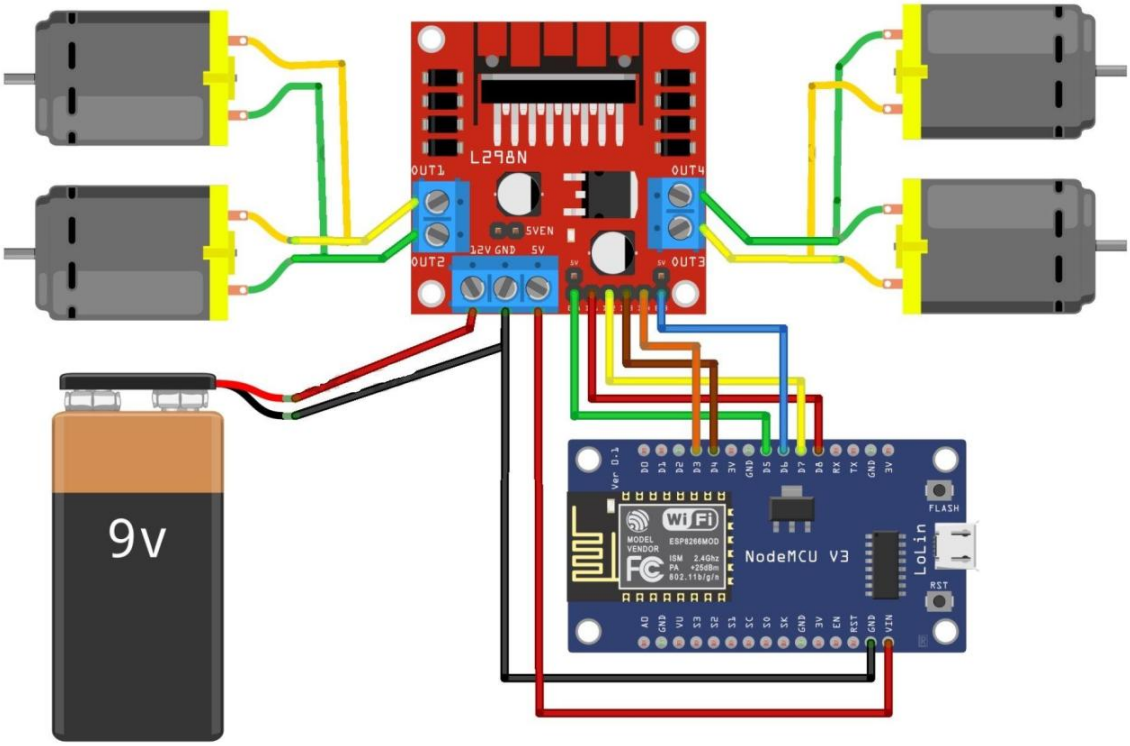

Figure 4 — Robot Car System Block Diagram

5. Working Principle

5.1 How the System Works

When powered on, the NodeMCU ESP8266 connects to the WiFi network (SSID: rsmaurya, Password: 123456788) and starts an HTTP web server on port 80. The user opens any web browser, enters the NodeMCU IP address shown in the Serial Monitor, and the controller web page loads. Touch buttons and a speed slider allow full control of the robot car in real time.

5.2 Step-by-Step Operation

1. Power ON: 12V battery supplies L298N; NodeMCU powered via USB or 5V from L298N
2. WiFi Connect: NodeMCU connects to "rsmaurya" network and gets an IP address
3. Web Server Start: HTTP server starts on port 80 and waits for requests
4. User Access: User types NodeMCU IP in browser and controller page loads
5. Button Press: User presses a direction button on the web interface
6. HTTP Request: Browser sends GET /cmd?action=forward to NodeMCU
7. Command Parse: NodeMCU parses the "action" parameter from URL
8. Motor Execute: GPIO D1-D4 set HIGH/LOW to control motor direction via L298N
9. Speed Apply: PWM on D5 (ENA) and D6 (ENB) controls motor speed
10. Button Release: Browser sends GET /cmd?action=stop — motors stop immediately

5.3 Motor Direction Logic Table

Movement	IN1	IN2	IN3	IN4
Forward	**HIGH**	LOW	**HIGH**	LOW
Backward	LOW	**HIGH**	LOW	**HIGH**
Turn Left	LOW	**HIGH**	**HIGH**	LOW
Turn Right	**HIGH**	LOW	LOW	**HIGH**
Stop	LOW	LOW	LOW	LOW

5.4 PWM Speed Control

Speed is controlled by Pulse Width Modulation (PWM) on ENA and ENB pins of L298N. When the user moves the speed slider on the web page, the browser sends a request to /speed?val=X where X is 0-100. The NodeMCU maps this to a PWM value of 0-255:

```
PWM Value = (Speed% x 255) / 100
```

- Slow (25%) → PWM = 64 → Motor runs at quarter speed
- Medium (50%) → PWM = 127 → Motor runs at half speed
- Fast (100%) → PWM = 255 → Motor runs at full speed

6. Code Description

6.1 Code Modules

- WiFi Setup: Connects to SSID "rsmaurya" with password "123456788"
- Pin Defines: IN1=D1, IN2=D2, IN3=D3, IN4=D4, ENA=D5, ENB=D6
- Motor Functions: moveForward(), moveBackward(), turnLeft(), turnRight(), motorStop()
- Soft Turn: softLeft(), softRight() — one side stops for gentle curves
- Speed Control: setSpeed(pwm) calls analogWrite() on ENA and ENB pins
- Web Server: ESP8266WebServer object on port 80
- Route Handlers: handleRoot(), handleCommand(), handleSpeed()
- HTML UI: Full mobile-responsive page embedded in PROGMEM flash memory

6.2 HTTP API Reference

HTTP Endpoint	Method	Action
GET /	HTTP GET	Loads the robot controller web page
GET /cmd?action=forward	HTTP GET	All motors forward
GET /cmd?action=backward	HTTP GET	All motors backward
GET /cmd?action=left	HTTP GET	Spin left (tank turn)
GET /cmd?action=right	HTTP GET	Spin right (tank turn)
GET /cmd?action=softleft	HTTP GET	Soft left curve
GET /cmd?action=softright	HTTP GET	Soft right curve
GET /cmd?action=stop	HTTP GET	Stop all motors
GET /speed?val=80	HTTP GET	Set motor speed to 80%

6.3 Upload Steps

11. Download and install Arduino IDE 2.x from arduino.cc/en/software
12. In File > Preferences, add this URL to Additional Boards Manager URLs:
    `http://arduino.esp8266.com/stable/package_esp8266com_index.json`
13. Go to Tools > Board > Boards Manager, search "esp8266" and install
14. Select Board: Tools > Board > ESP8266 Boards > NodeMCU 1.0 (ESP-12E Module)
15. Install CH340G USB driver from wch-ic.com (restart PC after install)
16. Connect NodeMCU to PC with a data-capable USB cable
17. Select correct port: Tools > Port > COMxx
18. Open the .ino file and click Upload button (right arrow icon)
1. Open Serial Monitor (Ctrl+Shift+M) at 115200 baud to see the IP address
2. Open browser on phone/PC connected to "rsmaurya" WiFi and enter the IP

7. Results & Testing

7.1 Speed vs Performance

Speed Setting	PWM Value	Approx RPM	Linear Speed
25%	64	50 RPM	~0.17 m/s
50%	127	100 RPM	~0.34 m/s
75%	191	150 RPM	~0.51 m/s
100%	255	200 RPM	~0.68 m/s

7.2 WiFi Performance

- WiFi Range: Up to 20-30 meters line-of-sight
- Command Response Time: Less than 50ms on local network
- Browser Support: Chrome, Firefox, Safari, Edge — all supported
- Mobile Support: Full touch support on iOS and Android
- Keyboard Support: W/A/S/D and Arrow keys work on PC browser

7.3 Test Results

Test Case	Expected Result	Status
WiFi Connection	NodeMCU joins rsmaurya network	**PASS**
Web Page Load	Controller UI loads in browser	**PASS**
Forward Command	All 4 motors rotate forward	**PASS**
Backward Command	All 4 motors rotate backward	**PASS**
Left Turn	Left motors reverse, Right motors forward	**PASS**
Right Turn	Right motors reverse, Left motors forward	**PASS**
Speed Slider	Motor speed changes with slider	**PASS**
Quick Speed Presets	Slow/Medium/Fast buttons work	**PASS**
Auto Stop on Release	Motors stop when button released	**PASS**
Keyboard Control	WASD / Arrow keys control car on PC	**PASS**

Final car Image

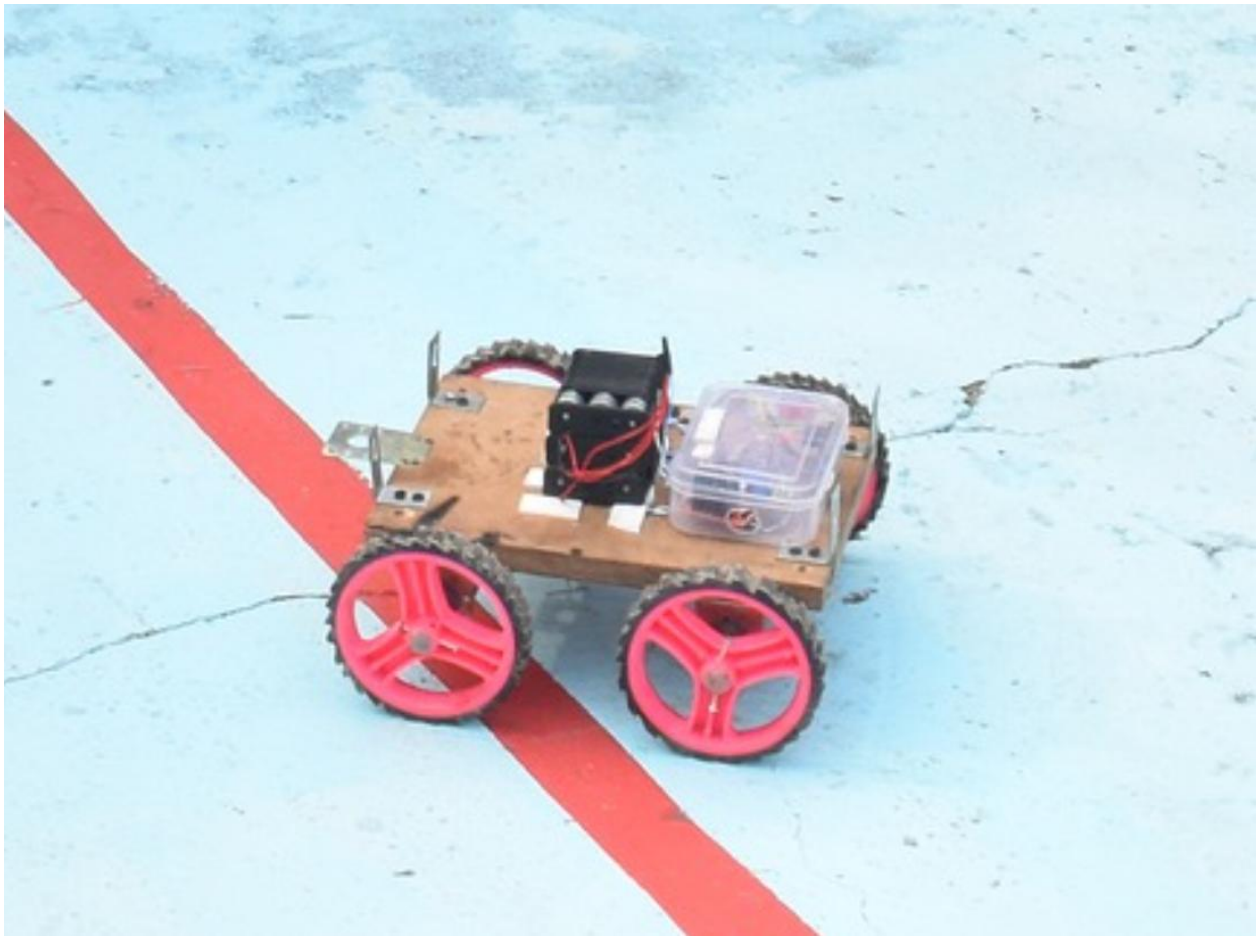

8. Conclusion & Future Scope

8.1 Conclusion

The WiFi Controlled Robot Car project was successfully designed, built, and tested. The NodeMCU ESP8266 acts as both the main microcontroller and web server, enabling seamless wireless control from any browser-enabled device. The L298N motor driver reliably controls four 12V 200RPM DC gear motors with smooth PWM-based speed adjustment. The web interface supports both mobile touch and PC keyboard controls. This project demonstrates the effective combination of IoT, embedded C programming, motor control, and web technologies into a practical working system.

8.2 Future Enhancements

- Add HC-SR04 Ultrasonic Sensor for automatic obstacle avoidance
- Integrate ESP32-CAM for live first-person video streaming
- Add HC-05 Bluetooth module as backup control method
- Implement joystick (virtual gamepad) control on the web interface
- Add battery level monitoring using NodeMCU A0 analog pin
- Upgrade to MOSFET-based driver (BTS7960) for higher current efficiency
- Add IR sensor array for autonomous line following mode
- Implement multi-user web authentication and control locking

8.3 Real-World Applications

- Remote area surveillance and inspection robots
- Educational robotics kits for schools and colleges
- Warehouse logistics and goods transport prototypes
- Agricultural field monitoring and crop inspection
- Search and rescue robots in disaster scenarios

9. References

3. ESP8266 NodeMCU Datasheet — Espressif Systems, espressif.com, 2023
4. L298N Dual H-Bridge Motor Driver Datasheet — STMicroelectronics
5. Arduino ESP8266 Core Documentation — arduino-esp8266.readthedocs.io
6. ESP8266WebServer Library Reference — ESP8266 Arduino GitHub
7. PWM Motor Control Application Note — Texas Instruments
8. Kolban, N. (2017). Kolban's Book on ESP8266 — leanpub.com
9. CH340G USB-Serial Driver — WCH Electronics, wch-ic.com