LM(2)5145/46-Q1 DC-DC Controller Design Tool

About | = Input Box | TERMS OF USE

Step 1: Operating Specifications

Input Voltage – Min, $V_{IN(min)}$	25	V
Input Voltage – Nom, $V_{IN(nom)}$	31.5	V
Input Voltage – Max, $V_{IN(max)}$	37.5	V
Output Voltage, V_{OUT}	12	V
Maximum Output Current, I_{OUT}	30	A
Free-running Switching Frequency, F_{SW}	250	kHz
SYNC Frequency (if used), $F_{SW-SYNC}$	250	kHz
Frequency Set Resistor, R_{RT}	40.2	kΩ

Step 2: Filter Inductor

Recommended Filter Inductance	3.0	µH
Inductance, L_O	3	µH
Inductor DCR	6	mΩ
Pk-to-Pk Ripple Current at $V_{IN(nom)}$, ΔI_L	10.7	A_{PK-PK}
Inductor Ripple Current as a % of Max I_{OUT}	36	%
Estimate Core Loss at $V_{IN(nom)}$	0.2	W

Step 3: $R_{DS(on)}$ or Shunt-Based Current Limit

Required Current Limit Setpoint	40	A
Current Limit Set Resistor, R_{ILIM}	1740	Ω
Min Inductor Sat Current, $I_{L(SAT)}$	54.0	A

Step 4: Output Capacitance

Output Voltage Ripple Specification	200	mV_{PK-PK}
Minimum Ideal Output Capacitance	27	µF
Total Output Capacitance (Derated), C_{OUT}	120	µF
Maximum Permitted ESR	18	mΩ
Output Capacitor ESR	1	mΩ
Resulting Output Voltage Ripple	46	mV_{PK-PK}
Output Capacitor Ripple Current	3.1	A_{RMS}

Step 5: Input Capacitance

Input Voltage Ripple Specification	120	mV_{PK-PK}
Minimum Ideal Input Capacitance	242	µF
Total Input Capacitance (Derated), C_{IN}	470	µF
Maximum Permitted ESR	2	mΩ
Input Capacitor ESR	1	mΩ
Resulting Input Voltage Ripple	97	mV_{PK-PK}
Input Capacitor Ripple Current	14.8	A_{RMS}

Step 6: Soft-start, UVLO

Soft-Start Time, t_{SS}	4	ms
Soft-Start Capacitance, C_{SS}	47	nF
Input Voltage UVLO Turn-On	28	V
Input Voltage UVLO Turn-Off	25	V
UVLO Upper Resistor, R_{UV1}	301	kΩ
UVLO Lower Resistor, R_{UV2}	13.3	kΩ

If the SYNC feature is not required, connect SYNCIN to GND or VCC for diode emulation or FPWM modes, respectively

Step 7: Compensation Design

LC Complex Pole Frequency	8.4	kHz
ESR Zero Frequency	1326	kHz
Desired Crossover Frequency	35	kHz
Appropriate Midband Gain	0.28	V/V
Upper Feedback Resistor, R_{FB1}	22.1	kΩ
Lower Feedback Resistor, R_{FB2}	1.58	kΩ
Actual Output Voltage, V_{OUT}	11.990	V

Pole & Zero Placement	F_{Z1}	5.9	kHz
Baseline P/Z Frequencies:	F_{Z2}	7.6	kHz
	F_{P1}	1326	kHz
	F_{P2}	125	kHz

Compensation Components

	Calculated / Std Values		Selected		Actual P/Z Frequencies
R_{C1}	6.1	6.04	6.04	kΩ	5.6 kHz (F_{Z1})
C_{C1}	4409	4700	4700	pF	7.2 kHz (F_{Z2})
C_{C2}	219	220	220	pF	1253 kHz (F_{P1})
R_{C2}	127	127	127	Ω	125 kHz (F_{P2})
C_{C3}	943	1000	1000	pF	

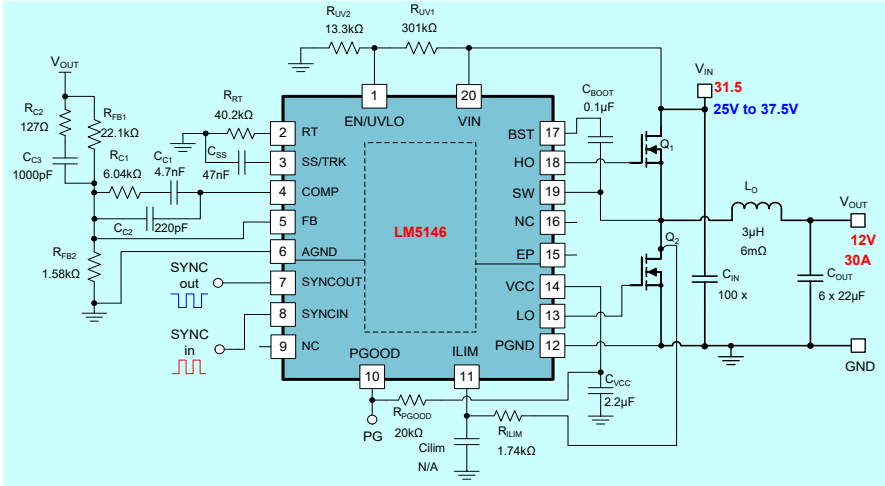

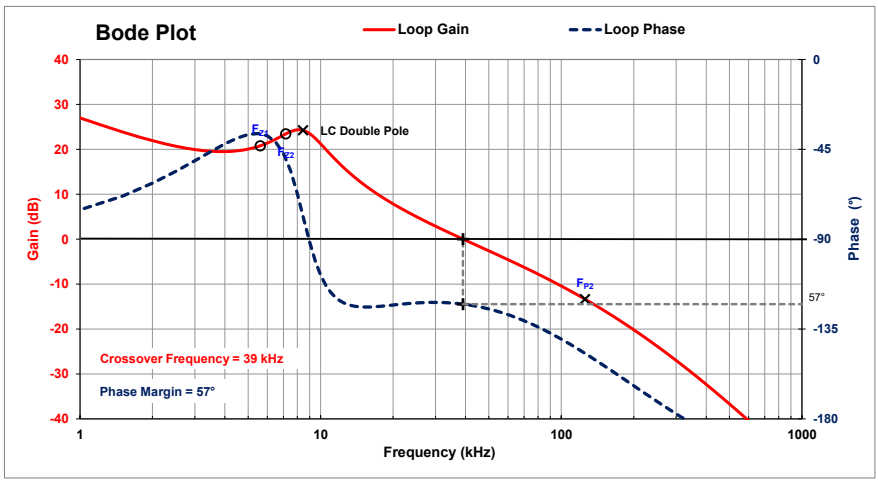

Efficiency / Power Loss Analyzer

Step 8: Efficiency

High-Side MOSFET (Q_1) Specifications	CSD19538Q3A	
On-State Resistance, $R_{DS(on)}$	52	mΩ
Total Gate Charge, Q_G	3.2	nC
Gate-Drain Charge, Q_{GD}	0.8	nC
Gate-Source Charge, Q_{GS}	1.6	nC
Output Capacitance, C_{OSS}	69	pF
Gate Resistance, R_G	4.6	Ω
Transconductance, g_{FS}	45	S
Gate-Source Plateau Voltage, $V_{GS(MP)}$	5	V
Body Diode Forward Voltage, V_{BD1}	0.8	V
Thermal Resistance, θ_{JA}	55	°C/W

Low-Side MOSFET (Q_2) Specifications	NVMFS6B14NL	
On-State Resistance, $R_{DS(on)}$	10	mΩ
Total Gate Charge, Q_G	13	nC
Output Charge, Q_{OSS}	20	nC
Output Capacitance, C_{OSS}	580	pF
Body Diode Forward Voltage, V_{BD2}	0.9	V
Body Diode Recovery Charge, Q_{RR}	50	nC
Thermal Resistance, θ_{JA}	40	°C/W

Step 9: IC Power Loss
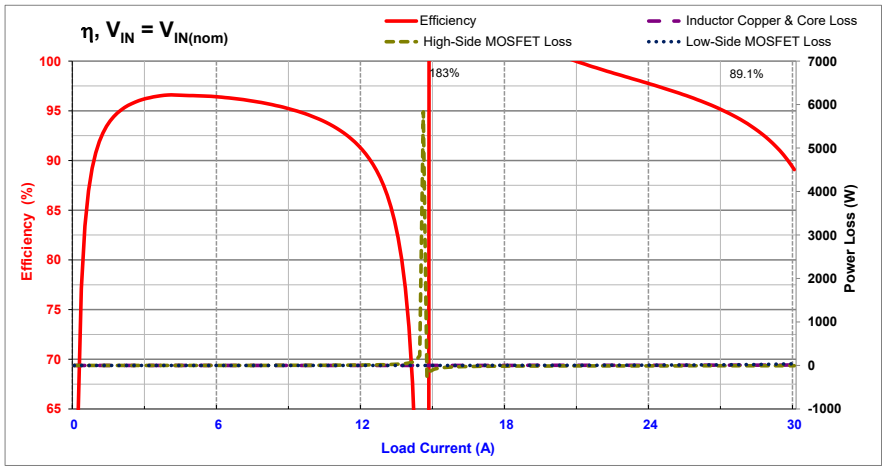
External VCC Applied	IC Power Dissipation	0.09 W
	IC Junction Temperature Rise (est)	4.7 °C