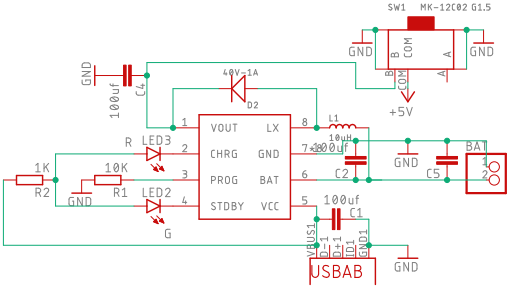
SW1 MK-12C02 G1.5
GND
B COM A
GND
COM
+5V
GND
100uf
C4
40V-1A
D2
+5V
100uf
C3
GND
VOUT LX
CHRG GND
PROG BAT
STDBY VCC
L1
10uH
200uf
C2
GND
C5
BAT
R LED3
1K
R2
10K
R1
GND
LED2
G
100uf
C1
VBUS1 D-1 D+1 ID1 GND1
USBAB
GND

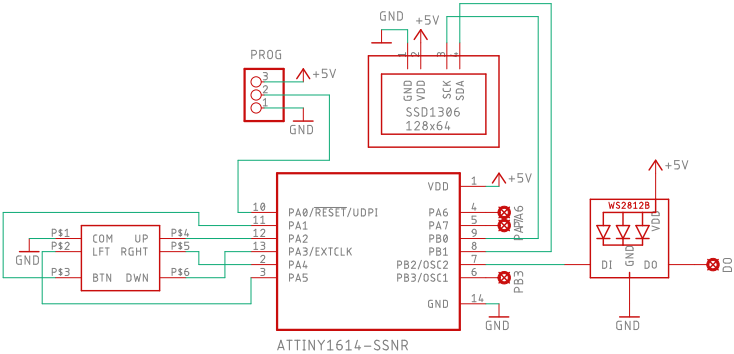
GND
+5V
GND VDD SCK SDA
SSD1306
128x64
PROG
+5V
GND
VDD
PA0/RESET/UDPI
PA1
PA2
PA3/EXTCLK
PA4
PA5
PA6
PA7
PB0
PB1
PB2/OSC2
PB3/OSC1
GND
+5V
PA6
PB3
GND
P$1
P$2
P$3
COM UP
LFT RGHT
BTN DWN
P$4
P$5
P$6
GND
+5V
WS2812B
VDD
DI GND DO
DO
GND
ATTINY1614-SSNR