PROTO-F

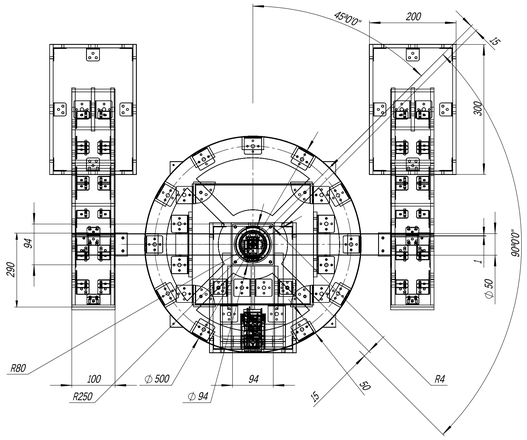

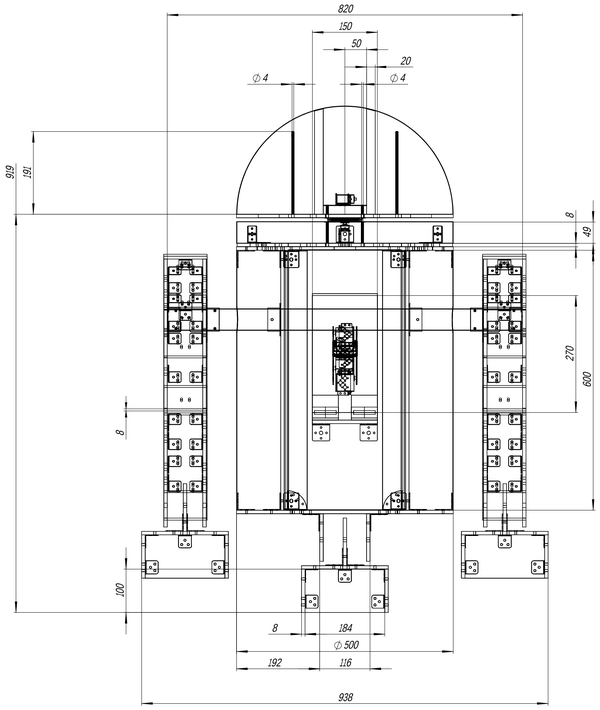

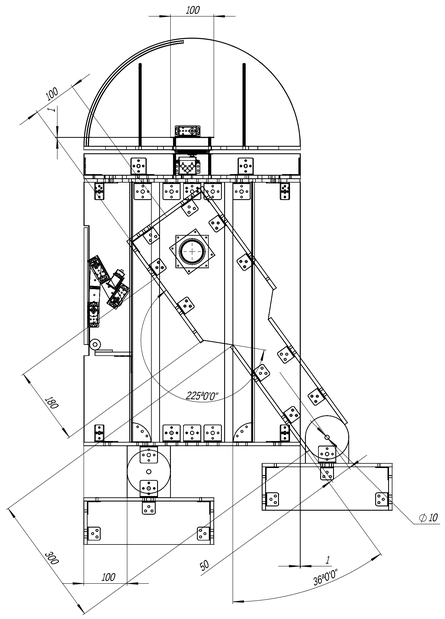

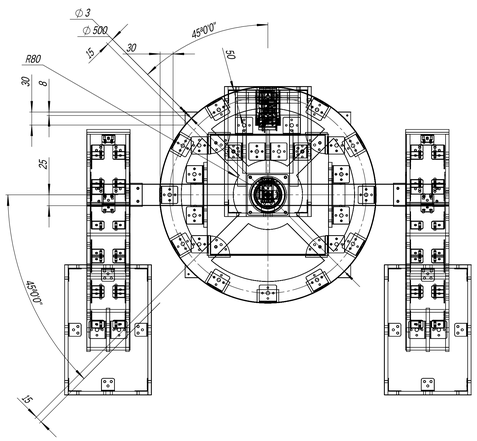

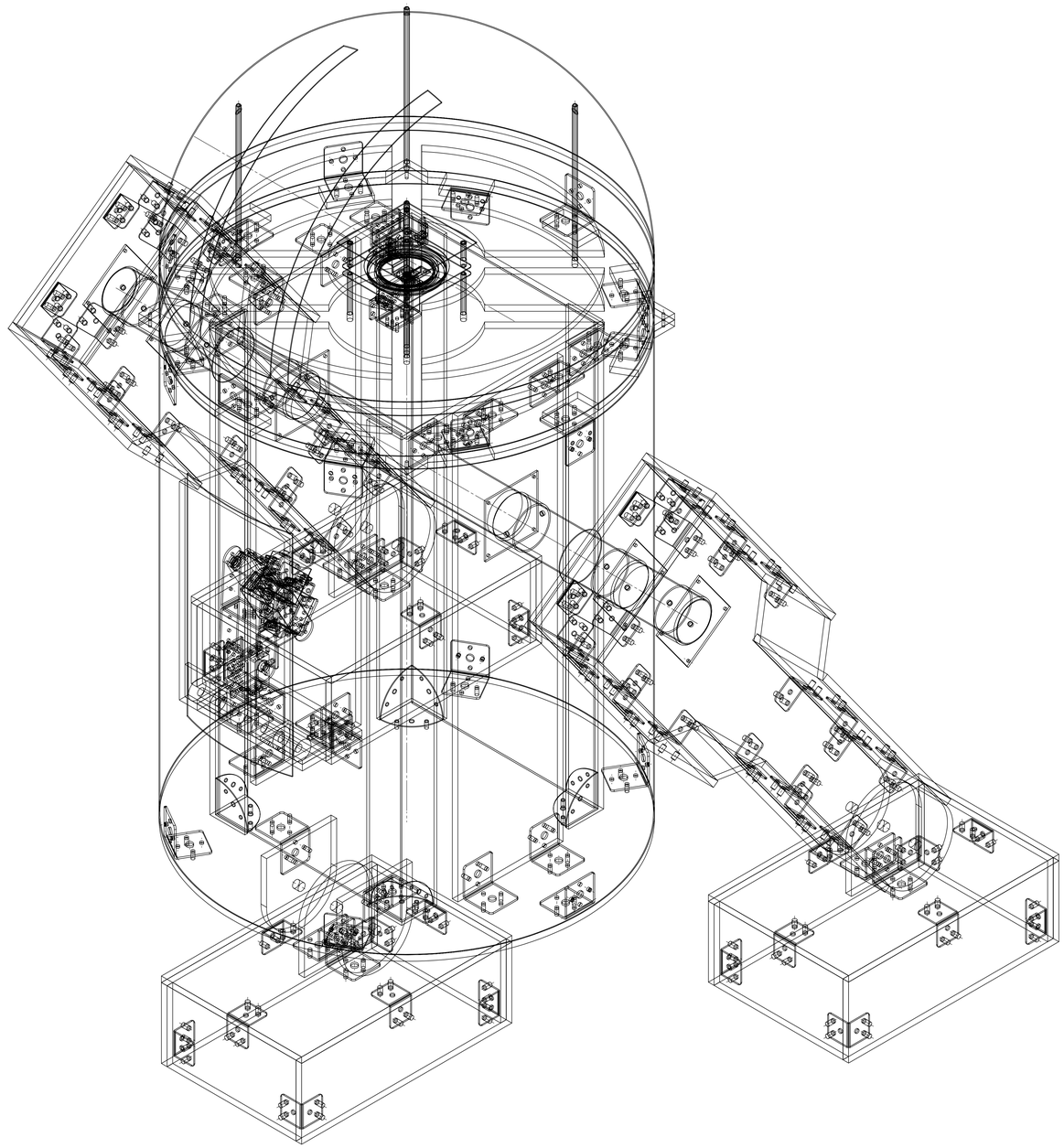

					PROTO-F		
Qzhd	Qbdbe	№ hkghn	Qhzh	Qbdbd	Pqnsnsxod-F	Qzdc	Qbdbd	Qbdbdbd
Qzzdbdp	Ahqj	Qpbdbzzc		06.10			27.17	1:5
Qdqj		Qzzdzzc		06.10		Qzdc 1	Qbdbd 1	
U. Qbdbdbd						Vdqsdw Rdrd`qbg		
U. Qbdbdbd								
Qbdbd		Tzzqzhd		06.10				

Qzdc 1 | Qbdbd 1 | Qzhd | Qbdbe | № hkghn | Qhzh | Qbdbd | Qzzdbdp | Ahqj | Qpbdbzzc | Qdqj | Qzzdzzc | U. Qbdbdbd | U. Qbdbdbd | Qbdbd | Tzzqzhd