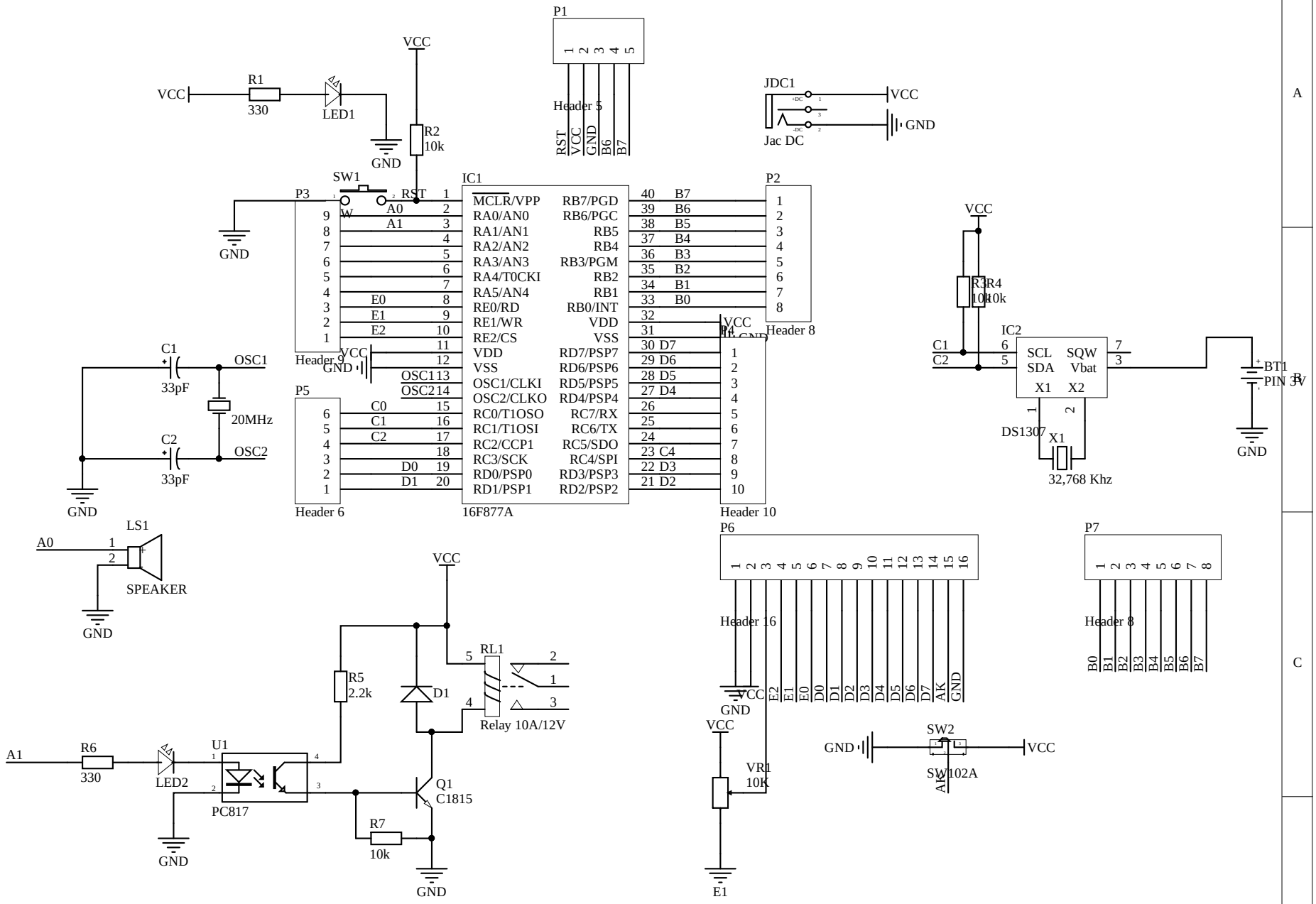

Title		
Size A	Number	Revision
Date: 4/6/2019		Sheet of
File: C:\Users\..\Sheet1.SchDoc		Drawn By: