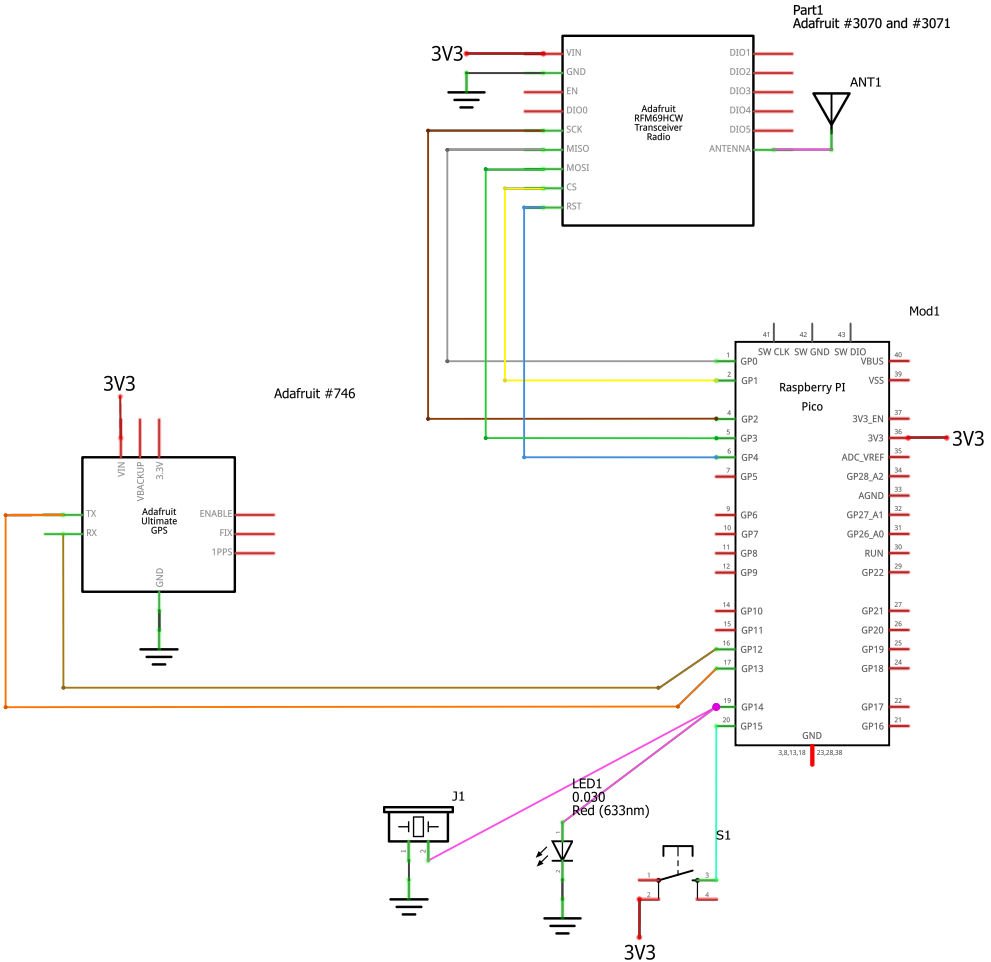
Part1
Adafruit #3070 and #3071
3V3
VIN
GND
EN
DIO0
SCK
MISO
MOSI
CS
RST
Adafruit
RFM69HCW
Transceiver
Radio
DIO1
DIO2
DIO3
DIO4
DIO5
ANTENNA
ANT1
Mod1
SW CLK
SW GND
SW DIO
GP0
GP1
GP2
GP3
GP4
GP5
GP6
GP7
GP8
GP9
GP10
GP11
GP12
GP13
GP14
GP15
Raspberry PI
Pico
VBUS
VSS
3V3_EN
3V3
ADC_VREF
GP28_A2
AGND
GP27_A1
GP26_A0
RUN
GP22
GP21
GP20
GP19
GP18
GP17
GP16
GND
3V3
Adafruit #746
VIN
VBACKUP
3.3V
TX
RX
Adafruit
Ultimate
GPS
ENABLE
FIX
1PPS
GND
J1
LED1
0.030
Red (633nm)
S1
3V3